San Joaquin Valley
AIR POLLUTION CONTROL DISTRICT

HEALTHY AIR LIVING™

NOV 15 2010

Marlin Statema
AgPower Visalia, LLC
6920 Salashian Parkway, A-102
Ferndale, WA 98248

Re: Notice of Preliminary Decision - Authority to Construct
Project Number: S-1080811 & S-1103627

Dear Mr. Statema:

Enclosed for your review and comment is the District's analysis of AgPower Visalia, LLC's application for an Authority to Construct for a plug flow anaerobic digester system with a digester gas-fired flare and installation of two 675 bhp digester gas-fired IC engines with hydrogen/syngas injection, at Moonlight Dairy (District Facility S-5834) located at 5061 Avenue 280 (W Caldwell Ave) in Visalia, CA.

The notice of preliminary decision for this project will be published approximately three days from the date of this letter. Please submit your written comments on this project within the 30-day public comment period which begins on the date of publication of the public notice.

Thank you for your cooperation in this matter. If you have any questions regarding this matter, please contact Mr. Ramon Norman of Permit Services at (559) 230-5909.

Sincerely,

David Warner
Director of Permit Services

DW:rn

Enclosures

Seyed Sadredin
Executive Director/Air Pollution Control Officer

Northern Region
4800 Enterprise Way
Modesto, CA 95356-8718
Tel: (209) 557-6400 FAX: (209) 557-6475

Central Region (Main Office)
1990 E. Gettysburg Avenue
Fresno, CA 93726-0244
Tel: (559) 230-6000 FAX: (559) 230-6061

Southern Region
34946 Flyover Court
Bakersfield, CA 93308-9725
Tel: 661-392-5500 FAX: 661-392-5585

www.valleyair.org www.healthyairliving.com

San Joaquin Valley
AIR POLLUTION CONTROL DISTRICT

HEALTHY AIR LIVING™

NOV 1 5 2010

Mike Tollstrup, Chief
Project Assessment Branch
Stationary Source Division
California Air Resources Board
PO Box 2815
Sacramento, CA 95812-2815

Re: Notice of Preliminary Decision - Authority to Construct
Project Number: S-1080811 & S-1103627

Dear Mr. Tollstrup:

Enclosed for your review and comment is the District's analysis of AgPower Visalia, LLC's application for an Authority to Construct for a plug flow anaerobic digester system with a digester gas-fired flare and installation of two 675 bhp digester gas-fired IC engines with hydrogen/syngas injection, at Moonlight Dairy (District Facility S-5834) located at 5061 Avenue 280 (W Caldwell Ave) in Visalia, CA.

The notice of preliminary decision for this project will be published approximately three days from the date of this letter. Please submit your written comments on this project within the 30-day public comment period which begins on the date of publication of the public notice.

Thank you for your cooperation in this matter. If you have any questions regarding this matter, please contact Mr. Ramon Norman of Permit Services at (559) 230-5909.

Sincerely,

David Warner
Director of Permit Services

DW:rn

Enclosure

Seyed Sadredin
Executive Director/Air Pollution Control Officer

Northern Region
4800 Enterprise Way
Modesto, CA 95356-8718
Tel: (209) 557-6400 FAX: (209) 557-6475

Central Region (Main Office)
1990 E. Gettysburg Avenue
Fresno, CA 93726-0244
Tel: (559) 230-6000 FAX: (559) 230-6061

Southern Region
34946 Flyover Court
Bakersfield, CA 93308-9725
Tel: 661-392-5500 FAX: 661-392-5585

www.valleyair.org www.healthyairliving.com

Bakersfield Californian
Bakersfield Californian

NOTICE OF PRELIMINARY DECISION
FOR THE PROPOSED ISSUANCE OF
AN AUTHORITY TO CONSTRUCT

NOTICE IS HEREBY GIVEN that the San Joaquin Valley Unified Air Pollution Control District solicits public comment on the proposed issuance of Authority to Construct to AgPower Visalia, LLC for a plug flow anaerobic digester system with a digester gas-fired flare and installation of two 675 bhp digester gas-fired IC engines with hydrogen/syngas injection, at Moonlight Dairy (District Facility S-5834) located at 5061 Avenue 280 (W Caldwell Ave) in Visalia, CA.

The analysis of the regulatory basis for this proposed action, Project #S-1080811 & S-1103627, is available for public inspection at http://www.valleyair.org/notices/public_notices_idx.htm and the District office at the address below. Written comments on this project must be submitted within 30 days of the publication date of this notice to **DAVID WARNER, DIRECTOR OF PERMIT SERVICES, SAN JOAQUIN VALLEY UNIFIED AIR POLLUTION CONTROL DISTRICT, 1990 EAST GETTYSBURG AVENUE, FRESNO, CA 93726.**

San Joaquin Valley Air Pollution Control District
Authority to Construct Application Review
Installation of a Plug-Flow Dairy Digester System with a Flare and two Biogas-Fired IC Engines with Hydrogen/Syngas Injection

Facility Name:	Moonlight Dairy/AgPower Visalia, LLC	Date:	November 8, 2010
	AgPower Visalia, LLC	Engineer:	Ramon Norman
Mailing Address:	6920 Salashian Parkway, A-102	Lead Engineer:	Martin Keast
	Ferndale, WA 98248		
Applicant:	Marlin Statema - AgPower Visalia, LLC		
Telephone:	(360) 366-9900	E-Mail:	mstatema@comcast.net
Fax:	(360) 366-5800		
Dairy Owner:	John Moons, Moonlight Dairy		
Dairy Mailing Address:	Moonlight Dairy, 5061 Ave 280 Visalia, CA 93277		
Consultant/Contact 1:	David Mitchell - Michael Brandman Associates		
Telephone:	(559) 497-0310	E-Mail:	dmitchell@brandman.com
Consultant/Contact 2:	J. C. Solt - Lindh & Associates		
Telephone:	(916) 729-5004	E-Mail:	Chuck@CSolt.net
Application #:	S-5834-3-2 and S-7831-1-0, -2-0, & -3-0		
Project #s:	S-1080811 & S-1103627		
Deemed Complete:	October 1, 2010		

I. Proposal

AgPower Visalia, LLC (District Facility S-7831) has requested Authority to Construct (ATC) permits to install an Andgar Corporation, mesophilic, plug-flow anaerobic digester system with an experimental air injection sulfur removal system, a digester gas-fired backup flare, and two 675 bhp Guascor digester gas-fired lean burn IC engines with hydrogen/syngas injection at the existing Moonlight Dairy operation (District Facility S-5834). The proposed equipment will be used to generate electricity from the gas produced by the digester. The District previously evaluated the project and proposed to deny the project because the applicant's previous proposal did not satisfy the District's BACT requirement for NO_X from the digester gas-fired engines. The District has determined that BACT for NO_X from engines fired on agricultural digester gas requires installation of controls with the potential to reduce NO_X emissions from the engines to 0.15 g/bhp-hr or less. The applicant has revised the proposal to add hydrogen/syngas injection to the engines to allow ultra-lean operation to reduce NO_X to meet the District BACT requirements for NO_X.

AgPower Visalia, LLC and Moonlight Dairy, which are separate companies, are undertaking the project as a partnership. The proposed digester gas-fired IC engine generator sets ~~that~~ will be constructed on land leased from the dairy site and will be owned, operated, and maintained by AgPower Visalia. In addition to installation of the digester system at Moonlight Dairy, AgPower Visalia will handle all of the ongoing service and maintenance required for the digester system

and will be responsible for any needed improvements. The dairy will provide the manure feedstock to the digester and dispose of the effluent. The proposed engine generator sets will produce electricity for the dairy and sell additional electricity to Southern California Edison (SCE) or another utility. The dairy and the proposed digester system at the site will be separately owned and operated. However, because the dairy will supply the manure feedstock to create the fuel for the engines and the engines will in turn supply power to the dairy, the District has determined that the facilities are support facilities based on the high level of interdependence that is being proposed. Therefore, Moonlight Dairy (Facility S-5834) and AgPower Visalia (Facility S-7831) are part of the same stationary source for purposes of District Rule 2201 - New and Modified Stationary Source Review Rule.

The digester system will include the following main components: a 99,000 gallon enclosed digester tank consisting of an in-ground concrete vessel; a settling basin prior to the digester; a mechanical solids separator; and an experimental biological sulfur removal system. The proposed digester system will produce biogas by digesting cow manure that will continue to be flushed from the existing cow housing areas at Moonlight Dairy. After installation of the digester system, the flush water will be pumped to a pre-digester settling basin and the dewatered manure will enter the enclosed digester tank. According to the applicant, the digester system will produce approximately 360,000 cubic feet of biogas per day. The gas produced in the digester will be combusted in the proposed 675 bhp Guascor lean burn IC engines (S-7831-2-0 & -3-0). When all of the gas cannot be combusted in the engines, it will be combusted in the proposed backup flare (S-7831-1-0).

The applicant has not requested to increase the number of cattle at the dairy site. The number of cattle for which Moonlight Dairy will be permitted will remain at 4,905 total head, including: 2,400 milk cows; 325 dry cows; 800 heifers (15-24 months); 800 heifers (7-14 months); 200 heifers (3-6 months); 350 calves (0-3 months), and 30 bulls.

The proposed backup flare and engines ~~and~~ will be subject to the Best Available Control Technology (BACT) requirements of District Rule 2201. Based on the information available regarding potential controls, the District has determined that a NO_X emission limit of 0.15 g/bhp-hr is technologically feasible for digester gas-fired IC engines if the system is properly designed and constructed and there is sufficient cleanup of the biogas. This NO_X emission limit has been applied to fossil fuel-fired IC engines for a number of years and the District has determined that technology has now sufficiently advanced to allow this limit to be applied to biogas gas-fired IC engines. However, although the District now considers 0.15 g-NO_X/bhp-hr to be technologically feasible BACT for biogas-fired engines, there remains some uncertainty regarding whether this emission limit can be met consistently given the fact that many of the previous installations of catalysts on biogas-fired engines have not been successful. Because of the remaining uncertainty, conditions will be incorporated into the ATC permits allowing NO_X emissions above 0.15 g-NO_X/bhp-hr (but not greater than the achieved in practice BACT level of 0.6 g-NO_X/bhp-hr) provided that the other conditions in the ATC are met and the applicant makes a satisfactory effort to reduce NO_X emissions to the lowest possible level to satisfy BACT. This will allow the applicant to proceed with installation of innovative controls to reduce emissions without fear of receiving a violation for exceeding an emission limit that they are not certain the operation can consistently achieve. As stated above, the applicant has proposed to add hydrogen/syngas injection to the engines to meet the District's BACT requirement for NO_X.

The applicant has also requested to utilize an experimental air injection sulfur removal system that will require an optimization period prior to achieving steady state operation and optimal removal of sulfur from the digester gas. Conditions will be incorporated into the ATC permits for the backup flare and engines allowing for a period to optimize operation of the proposed experimental air injection sulfur removal system. The conditions will require that the sulfur content of the digester gas is minimized during commissioning and optimization of the experimental sulfur removal system. If the experimental sulfur removal system does not perform satisfactorily during the six-month test period allowed by the permit, the applicant will be required to install an additional or alternative sulfur removal system/scrubber.

ATC permits are required for construction of the proposed plug-flow anaerobic digester system (S-7831-1) consisting of an enclosed in-ground digester tank, a settling basin, a mechanical separator, an experimental air injection sulfur removal system, and a digester gas-fired backup flare. ATC permits are also required for the proposed 675 bhp digester gas-fired Guascor lean burn IC engines with hydrogen/syngas injection (S-7831-2-0 & -3-0). Additionally, the project constitutes a modification to the existing liquid manure handling system (S-5834-3) since allowing the manure that is currently being flushed to the lagoons to be diverted to the digester system constitutes a change in the method of operation (See Appendix A for the current permit for the liquid manure handling system Permit S-5834-3-0 and ATC S-5834-3-1)

The project triggers the public notice requirements of District Rule 2201. Therefore, the preliminary decision for the project will be submitted to the California Air Resources Board (CARB), a public notice will be published in a local newspaper of general circulation in the county of the project, and a 30-day public comment period will be completed prior to issuance of the ATC permits.

The construction of the digester system at the dairy is a discretionary project subject to the requirements of the California Environmental Quality Act (CEQA). As a public agency with discretionary powers, the District has a responsibility to determine the significance of environmental impacts and ensure that the requirements of CEQA are satisfied. The project is located in Tulare County. According to the applicant, Tulare County has determined that installation of the digester systems will require only a ministerial amendment to the dairy's Special Use Permit (PSP 93-089) and no discretionary permit is required for the covered lagoon digesters. Based on the District's analysis of the project, the District has determined that the proposed project will not adversely affect air quality and the overall project will not have a significant effect on the environment. Therefore, the project is exempt from the provisions of CEQA (CEQA Guidelines §1506(b)(3)).

II. Applicable Rules

Rule 2010	Permits Required (12/17/92)
Rule 2201	New and Modified Stationary Source Review Rule (12/18/08)
Rule 2520	Federally Mandated Operating Permits (6/21/01)
Rule 4101	Visible Emissions (2/17/05)
Rule 4102	Nuisance (12/17/92)
Rule 4201	Particulate Matter Concentration (12/17/92)
Rule 4311	Flares (6/18/09)
Rule 4550	Conservation Management Practices (CMP) (8/19/04)
Rule 4570	Confined Animal Facilities (CAF) (6/15/06)

Rule 4701 Stationary Internal Combustion Engines – Phase 1 (8/21/03)
Rule 4702 Stationary Internal Combustion Engines – Phase 2 (1/18/07)
Rule 4801 Sulfur Compounds (12/17/92)
40 CFR Part 60, Subpart JJJJ - Standards of Performance for Stationary Spark Ignition Internal Combustion Engines
40 CFR Part 63, Subpart ZZZZ - National Emissions Standards for Hazardous Air Pollutants for Stationary Reciprocating Internal Combustion Engines
CH&SC 41700 Health Risk Assessment
CH&SC 42301.6 School Notice
Public Resources Code 21000-21177: California Environmental Quality Act (CEQA)
California Code of Regulations, Title 14, Division 6, Chapter 3, Sections 15000-15387: CEQA Guidelines

III. Project Location

The facility is located at 5061 Ave 280 (W. Caldwell Ave) in Visalia, CA. The equipment is not located within 1,000 feet of the outer boundary of a K-12 school. Therefore, the public notification requirement of California Health and Safety Code 42301.6 is not applicable to this project. (See Appendix B for a facility location map)

IV. Process Description

Dairy

The primary function of Moonlight Dairy is the production of milk, which is used to make products for human consumption. Production of milk requires a herd of mature dairy cows that are lactating. In order to produce milk, the cows must be bred and give birth. The gestation period for a cow is 9 months, and dairy cows are bred again 4 months after calving. Thus, a mature dairy cow produces a calf every 12 to 14 months, which is why there are generally different ages and types of cows at the dairy, including lactating cows, dry cows, heifers, and calves.

The milk cows at a dairy usually generate anywhere from 130 to 150 pounds of manure per day. Manure accumulates in confinement areas such as barns, open corrals (dry lots), and the milking center. Manure is primarily deposited in areas where the herd is fed and given water. How the manure is collected, stored and treated depends directly on the manure management techniques used at a particular dairy.

Dairy manure is collected and managed as a liquid, a semi-solid or slurry, and a solid. Manure with a total solids or dry matter content of 20% or higher usually can be handled as a solid while manure with a total solids content of 10% or less can be handled as a liquid.

Cow Housing

All of the milk cows at Moonlight Dairy are housed in freestall barns with flushed lanes. In a freestall barn, the cows are grouped in large pens with free access to feed bunks, water, and stalls for resting. A standard freestall barn design has a feed alley in the center of the barn separating two feed bunks on each side. All dry cows, heifers, and bulls at the dairy are housed in open corrals with flushed lanes. An open corral is a large open area where cows are confined with unlimited access to feed and water. Calves at this dairy are housed in calf

hutches with a flush system. This project will not affect how manure is removed from the cow housing areas. Currently manure is removed from the lanes and walkways of the freestall barns and open corrals by a flush system. After construction of the plug flow anaerobic digester, the manure will continue to be flushed from the cow housing lanes and walkways. The only difference will be that the dewatered flushed manure will enter the proposed plug flow anaerobic digester rather than the uncovered lagoon.

Mesophilic Plug Flow Anaerobic Digester (S-7831-1)

An anaerobic digester is a sealed basin or tank that is designed to accelerate the decomposition of organic matter by microbes in the absence of oxygen. The process of anaerobic decomposition results in the conversion of organic compounds in the wastewater into methane (CH_4), carbon dioxide (CO_2), and water rather than intermediate Volatile Organic Compounds (VOCs). The gas generated by this process is known as biogas, waste gas, or digester gas. In addition to methane and carbon dioxide, biogas also contains small amounts of Nitrogen (N_2), Oxygen (O_2), Hydrogen Sulfide (H_2S), and Ammonia (NH_3). Biogas will also include trace amounts of various VOCs that remain from incomplete digestion of the volatile solids in the incoming wastewater. The small amounts of undigested solids that remain after digestion are removed from the digester as sludge. Because biogas is mostly composed of methane, the main component of natural gas, the gas produced in the digester can be cleaned to remove H_2S and other impurities and used as fuel.

The proposed Andgar Corporation, mesophilic, plug-flow anaerobic digester system will be designed to process the manure generated from all of the cattle at the dairy site. The new mesophilic, plug-flow anaerobic digester system will be constructed north of the existing lagoons and storage ponds and will consist of the following main components: a 290 ft long x 73 ft wide x 16 ft deep enclosed digester tank consisting of an in-ground concrete vessel with a total volume of 99,000 gallons; a settling basin prior to the digester for removing moisture from the manure prior to entering the digester; a mechanical solids separator, which will be relocated to be closer to the digester. (See Appendix C for a basic description of the equipment and operation for the proposed Andgar, plug flow, mesophilic, anaerobic digester system.) A mechanical building will be constructed about 30 ft from the digester system to house the proposed engines and generation equipment. The low NO_X backup flare for the digester system will be located near the mechanical building. The applicant has also proposed to install an experimental air injection sulfur removal system to remove sulfur compounds from the gas.

The manure for the plug flow anaerobic digester will continue to be flushed from the cow housing areas at the dairy. However, after installation of the digester system, the flush water will be pumped to an expanded pre-digester settling basin where moisture can be removed from the manure so that it reaches the optimum solids concentration for operation of the plug flow digester. The dewatered manure solids will enter the enclosed digester tank and the excess liquid from the manure will be recycled for flushing the feed lanes in the cow housing areas. The effluent exiting the digester will be pumped through a mechanical manure solids separator. The liquid effluent will be directed to the existing lagoon system. As is the current practice at the dairy, some of the separated solids from the digester will be dried and used for bedding in the freestall barns while the remainder will be stored for use as fertilizer on the dairy's cropland or exported for use as fertilizer at other farms. Heat will be recovered from the exhaust of the proposed IC engines using a hot water heat pipe circulation system and will be used to maintain the optimum temperature for operation of the mesophilic digester (80 - 100

°F). The digester system will have a retention time of approximately 20 days. According to the applicant, the plug flow anaerobic digester is expected to produce an average of 360,000 scf of biogas per day. The biogas produced by the plug flow digester will be principally composed of 60-70% methane and 30-40% carbon dioxide.[1] The biogas will be piped from the digester to the proposed IC engines to generate electricity. When all of the gas cannot be used by the IC engines, the gas will be combusted in the proposed backup flare. The flare will be limiting to combusting no more than 13.14 MMscf/yr, which is 10% of the expected annual gas production from the digester.

Hydrogen Sulfide (H_2S) Removal from the Digester Gas

As stated above, the applicant is proposing to use an experimental air injection system to remove sulfur compounds from the digester gas prior to combustion in the proposed engines or flare. The proposed sulfur removal system functions by injecting small amounts of air to the headspace of a digester. The continuous injection of small amounts of air into the digester headspace increases the amount of oxygen in the headspace and the surface layer of the liquid in the digester. The air oxidizes sulfides in the digester gas and surface of the liquid in the digester to elemental sulfur and water. The sulfur dissolves in water in the digester and can be removed from the digester gas by deposition and filtration. Injection of air also encourages the establishment of sulfur oxidizing microorganisms, such as Thiobacillus species, that can oxidize H_2S in the digester gas to elemental sulfur and sulfates that can be removed from the digester liquid. Successful installations of the air injection sulfur removal system have demonstrated significantly reduced operation and maintenance costs when compared to other methods of sulfur removal, such as iron sponge. The air injection sulfur removal system has been shown to reduce H_2S concentrations in digester gas to very low levels (≤ 10 ppmv) in covered lagoon digesters. Similar systems have also been successfully applied to some mixed digester systems in Europe. However, attempts to apply the system to plug flow digester systems are still considered experimental.

The experimental air injection sulfur removal system will require a period of commissioning and optimization prior to achieving optimal removal of sulfur compounds from the digester gas. The commissioning period is considered the final phase of the construction process rather than initial startup of the equipment. The commissioning period is required because air injection is not recommended until the digester establishes stable production of gas. Beginning air injection earlier can interfere with the establishment of methanogens that are required to produce the digester gas. After the commissioning period, the experimental air injection sulfur removal system may require additional time for optimization. Conditions will be incorporated into the ATC permits for the backup flare and engines allowing for a six-month test period to optimize operation of the air injection sulfur removal system. The maximum sulfur content of the digester gas will be limited to no more than 200 ppmv during this optimization period with an objective of a sulfur concentration of 50 ppmv or less. If the experimental sulfur removal system does not reduce the sulfur concentration of the digester gas to 50 ppmv or less by the end of the six-month test period, the applicant will be required to install an additional or alternative sulfur removal system/scrubber.

[1] EPA AgSTAR – frequent questions (http://www.epa.gov/agstar/anaerobic/faq.html#q4). "Anaerobic Digestion of Animal Wastes: Factors to Consider", ATTRA - National Sustainable Agriculture Information Service (http://attra.ncat.org/attra-pub/PDF/anaerobic.pdf) & "Anaerobic Digestion Overview", David Schmidt, University of Minnesota Department of Biosystems and Agricultural Engineering (http://www.mnproject.org/presentations/Schmidt/Anaerobicdigestion101.pdf)

In addition to the experimental air injection sulfur removal system, the applicant will install a small iron sponge (or equivalent) sulfur removal system to remove H_2S from the digester gas stream(s) that enter the proposed Florida Syngas hydrogen/syngas reformers. The iron sponge scrubber will protect the catalysts used in hydrogen/syngas reformers from poisoning during commissioning and optimization of the air injection sulfur removal system. After the digester gas streams pass through the iron sponge scrubber, the sulfur content of the gas will be no more than 200 ppmv, which will allow operation of the catalytic reformers.

Digester Gas-Fired IC Engines (S-7831-2 & -3):

To generate electricity from the gas produced by the digester, the applicant is proposing to install two 675 bhp Guascor Model SFGLD 360 lean burn IC engine powering 450 kW electrical generators. After most of the H_2S in the digester gas has been removed by the sulfur removal system, the gas will be piped to the engines. A portion of the digester gas will be sent to Florida Syngas hydrogen/syngas reformers. The reformers will convert some of the gas to hydrogen (H_2) and carbon monoxide (CO). The syngas will be mixed with the digester gas and the mixture will be used to fuel the engines. Adding H_2 to the gas combusted in the engines will allow leaner operation. The reformers will be designed to supply sufficient hydrogen to compose at least 11% of the total engine fuel by volume. The engines and electrical generators will provide electricity for onsite use at the facility and to provide electricity for sale to Southern California Edison (SCE) or another utility. Heat recovered from the engines' exhaust will provide heat for the digester. The engines will be permitted to operate up to 24 hr/day and 8,760 hr/year.

V. Equipment Listing

S-5834-3 (Modification of Existing Unit)

Pre-Project Equipment Description (ATC S-5834-3-1):

S-5834-3-1: LIQUID MANURE HANDLING SYSTEM CONSISTING OF A MECHANICAL SEPARATOR AND 4 STORAGE PONDS (25' X 25' X 20', 120' X 750' X 20', 180' X 1080' X 20', 180' X 320' X 20'). MANURE IS LAND APPLIED THROUGH FLOOD IRRIGATION

Proposed Modification:

Allow manure currently being flushed to the lagoon system to be sent to an anaerobic digester and relocate mechanical separator to after the digester

Post Project Equipment Description:

S-5834-3-2: LIQUID MANURE HANDLING SYSTEM CONSISTING OF ONE SETTLING BASIN (25' X 25' X 20'), ONE LAGOON (120' X 750' X 20'), AND TWO STORAGE PONDS 180' X 1080' X 20'; 180' X 320' X 20'). MANURE IS LAND APPLIED THROUGH FLOOD IRRIGATION

S-7831-1 (New Unit):

S-7831-1-0: ANDGAR PLUG FLOW MESOPHILIC ANAEROBIC DIGESTER SYSTEM CONSISTING OF A PRE-DIGESTER SETTLING BASIN, AN IN-GROUND CONCRETE VESSEL (73' X 290 ' X 16'), ONE MECHANICAL SEPARATOR, AND ONE 9.0 MMBTU/HR ANDGAR-8" DIGESTER GAS-FIRED ENCLOSED BACKUP FLARE SERVED BY AN AIR INJECTION H2S REMOVAL SYSTEM (OR EQUIVALENT H2S REMOVAL SYSTEM)

S-7831-2 (New Unit):

S-7831-2-0: 675 BHP GUASCOR MODEL SFGLD 360 DIGESTER GAS-FIRED LEAN BURN IC ENGINE WITH A FLORIDA SYNGAS PLASMA ARC REFORMER FOR HYDROGEN/SYNGAS INJECTION SERVED BY AN AIR INJECTION H2S REMOVAL SYSTEM AND AN IRON SPONGE H2S SCRUBBER (OR EQUIVALENT H2S REMOVAL SYSTEM) POWERING AN ELECTRICAL GENERATOR

S-7831-3 (New Unit):

S-7831-3-0: 675 BHP GUASCOR MODEL SFGLD 360 DIGESTER GAS-FIRED LEAN BURN IC ENGINE WITH A FLORIDA SYNGAS PLASMA ARC REFORMER FOR HYDROGEN/SYNGAS INJECTION SERVED BY AN AIR INJECTION H2S REMOVAL SYSTEM AND AN IRON SPONGE H2S SCRUBBER (OR EQUIVALENT H2S REMOVAL SYSTEM) POWERING AN ELECTRICAL GENERATOR

VI. Emission Control Technology Evaluation

PM_{10}, VOC, and NH_3 are the major pollutants of concern from dairy operations.

Gaseous pollutant emissions at a dairy result from the ruminant digestive processes (enteric emissions), from the decomposition and fermentation of feed, and also from decomposition of organic material in dairy manure. Volatile Organic Compounds (VOCs) are formed as intermediate metabolites when organic matter in manure degrades. Ammonia volatilization is the result of the microbial decomposition of nitrogenous compounds in manure. The quantity of enteric emissions depends directly on the number and types of cows. The quantity of emissions from manure decomposition depends on the amount of manure generated, which also depends on the number and types of cows. Therefore, the total herd size and composition is the critical factor in quantifying emissions from a dairy.

Various management practices are used to control emissions at this dairy. These practices include flushing feed lanes, scraping of open corrals, and removal of manure from paved areas such as the milk parlor, feed lanes, and walkways.

Solids Separation (S-5834-3)

The liquid manure handling system for Moonlight Dairy includes a mechanical separator to remove fibrous solids and settling basins to remove sand and heavy solids prior to the lagoon system. Solids separation prevents excessive loading of volatile solids in lagoon treatment systems. Excessive loading of volatile solids in lagoons inhibits the activity of the

methanogenic bacteria and leads to increased rates of volatilization non-methane organic compounds. When the activity of the methanogenic bacteria is not inhibited, most of the VOCs are metabolized to simpler compounds, and the potential for VOC emissions is reduced.

Anaerobic Digester System (Mesophilic, Plug Flow) (S-7831-1)

As stated above, the applicant has proposed to construct a new enclosed, plug flow anaerobic digester to process the manure generated by the cattle at the dairy. A properly designed and operated anaerobic digester will reduce VOC emissions because the organic compounds in the manure will be mostly converted into methane, carbon dioxide, and water. The gas that will be generated by the digester system will be consumed as fuel in the proposed IC engines or combusted in the proposed flare when it is not possible to use the gas in the IC engines. Combustion (thermal incineration) is a generally accepted, well-established VOC control technique.

Digester Control Efficiency: A properly designed anaerobic digester will reduce degradable Volatile Solids (VS) by at least 60% and will reduce the biological oxygen demand (BOD), resulting in greater efficiency in degrading compounds that contain carbon into methane and carbon dioxide rather than VOCs. Since the anaerobic digesters will reduce the degradable volatile solids in the manure by at least 60%, this analysis will assume a 60% control efficiency for VOC emissions from the lagoon and storage pond. In addition to controlling 60% of the VOC emissions from the lagoons and storage ponds, the anaerobic digester will also control 60% of the VOC emissions from liquid manure land application at each dairy as well. This is due to fewer volatile solids in the effluent from the digester. Therefore, these emission reductions will also be included in the analysis.

Hydrogen Sulfide (H_2S) Removal System: As described above, the applicant has proposed to utilize an experimental air injection sulfur removal system that will remove sulfur compounds in the digester by means of biological oxidation. After, the commissioning period, the sulfur content of the digester gas will be no more than 200 ppmv. The experimental system will be allowed a six-month test period to reduce the sulfur concentration of the gas to 50 ppmv or less. If the experimental sulfur removal system does not reduce the sulfur concentration of the digester gas to 50 ppmv or less by the end of the test period, the applicant will be required to install an additional or alternative sulfur removal system/scrubber.

Lean Burn Biogas-Fired IC Engines (S-7831-2 & -3)

The proposed engines will be equipped with:

- Lean Burn Technology
- Hydrogen/Syngas Injection for ultra-lean operation
- Positive Crankcase Ventilation (PCV) or 90% efficient control device
- Air/Fuel Ratio or an O_2 Controller
- Iron sponge H_2S Scrubber (or equivalent H2S removal system) to protect catalysts for hydrogen/syngas Reformers

The applicant has proposed to install lean burn engines with hydrogen/syngas injection. Lean burn engines operate with high excess air (fuel lean combustion) which reduces the peak combustion temperature. This inhibits the reactions responsible for thermal NO_X. Lean burn combustion technology also incorporates improved swirl patterns to promote thorough air/fuel

mixing. The applicant is proposing to use catalytic reformers to convert a portion of the digester gas used to fuel the engines into syngas consisting mostly of hydrogen (H_2) and carbon monoxide (CO). The reformers will be designed to supply sufficient hydrogen to compose at least 11% of the total engine fuel by volume. Using hydrogen as fuel in the engines will allow operation of the engines under leaner conditions that would not be possible with the pure digester gas. This will decrease the peak flame temperature further, which will result in additional NO_X reductions. The engines will be required to maintain stable operation with at exhaust oxygen concentrations of at least 8% unless satisfactory NO_X reductions can be demonstrated with lower oxygen concentrations in the exhaust.

The PCV system reduces crankcase VOC and PM_{10} emissions by at least 90% over an uncontrolled crankcase vent.

The fuel/air ratio controller, (oxygen controller) is used to maintain the correct amount of oxygen in the exhaust stream to optimize engine function while minimizing emissions of certain pollutants.

As discussed above, the applicant will install a small iron sponge (or equivalent) sulfur removal system to remove H_2S from the digester gas stream(s) that enter the proposed Florida Syngas hydrogen/syngas reformers. The iron sponge scrubber will protect the catalysts used in hydrogen/syngas reformers from poisoning during commissioning and optimization of the air injection sulfur removal system. Iron sponge consists of a hydrated form of iron oxide impregnated onto wood shavings. The wood shavings serve only as a carrier for the iron oxide powder. As the gas passes through the iron sponge material, the H_2S is removed by the following chemical reaction producing black iron sulfide and water:

$$H_2S + Fe(OH)_2 \longrightarrow FeS + 2H_2O + \text{heat}$$

After the digester gas passes through the iron sponge, the sulfur content will be no more than 200 ppmv. Before the iron sponge is completely spent, it must be regenerated or replaced.

VII. General Calculations

A. Assumptions

General Assumption

- Moonlight Dairy (Facility S-5834) and AgPower Visalia (Facility S-7831) are part of the same stationary source.

Assumptions for the Dairy (Facility S-5834)

- Potential to Emit for the dairy will be based on the maximum as-built design capacity for the number and types of cows at the dairy.
- For the dairy, only emissions from the lagoons & storage ponds and IC engines at the dairy will be used to determine if the facility is a major source since these units are considered to be the only sources of non-fugitive emissions at the dairy facilities.
- Potential to Emit for the 375 bhp emergency IC engine (Permit #S-5834-9-0) is taken from In-house PTO Project #S-1083370.

- The Potential to Emit for the milking parlor (Permit #S-5834-1) is taken from PE calculations in the Rule 4570 project for the dairy (Project #S-1064718) and is based on the maximum design capacity for the number of cows at the dairy.
- At Moonlight Dairy, all milk cows are housed in freestall barns. All dry cows, heifers, and bulls are housed in open corrals with a flush system. The calves are housed in calf hutches.
- All PM_{10} emissions from the dairy will be allocated to the cow housing unit (S-5834-2).
- Because of the moisture content of the separated solids PM_{10} emissions from solid manure handling are considered negligible.
- There is no increase in the amount of solid manure handled as a result of construction of the plug flow anaerobic digester.
- The PM_{10} emission factors for the dairy animals are based on a District document entitled "Dairy and Feedlot PM_{10} Emissions Factors", which compiled data from studies performed by Texas A&M ASAE and a USDA/UC Davis report quantifying dairy and feedlot emissions.
- The VOC and NH_3 emission factors for milk cows are based on an internal document entitled "*Breakdown of Dairy VOC Emission Factor into Permit Units*". The VOC and NH_3 emission factors for the other cows were developed by taking the ratio of manure generated by the different types of cows to the milk cow and multiplying it by the milk cow emission factor.
- For BACT analysis purposes, each dairy permit unit will also be treated as an emissions unit, except for the liquid manure handling permit unit. For BACT analysis purposes, the liquid manure handling permit unit will be composed of two emission units: 1) treatment lagoon and storage pond and 2) liquid manure land application.
- Since a separate feed emission factor has not yet been established for the feed storage and handling permit units and these units are not being modified, emissions will not be calculated for these units.
- For compliance with District Rule 4570, this dairy feeds animals in accordance with the National Research Council (NRC). Feeding animals in accordance with the NRC guidelines is a feed formulation practice used to improve animal health and productivity. This typically limits the overfeeding of certain feed that have the potential of increasing emissions. This mitigation measure has the potential of reducing a significant amount of emissions, however, since there is not much data available, a conservative control efficiency of 5% will be applied to the overall dairy EF.
- A properly designed anaerobic digester has the potential of reducing significant amount of emissions, since the system is designed to promote the conversion of Volatile Solids (VS) into methane by methanogenic bacteria. The system will also significantly reduce the biological oxygen demand (BOD), resulting in greater efficiency in degrading compounds that contain carbon into methane. Since the VS reduction for the covered lagoon digester will be at least 60%, for purposes of this evaluation, a VOC control efficiency of 60% will be applied to this practice for the lagoons and land application until better data becomes available.
- All emissions from the liquid manure that enters the plug flow anaerobic digester will be allocated to the liquid manure handling system.

Assumptions for Digester Gas Combusted in the Backup Flare (S-7831-1) and IC engines (S-7831-2 & -3)

- The amount of gas generated by the digester system is approximately 360,000 scf/day (proposed by applicant).
- Molar composition of typical digester biogas is about 60% methane and 40% carbon dioxide with trace amounts of hydrogen sulfide, VOC, and other compounds.[1]
- Typical Higher Heating Value for Dairy biogas: 600 Btu/scf
- Typical EPA F-factor for Biogas: 9,100 dscf/MMBtu (Dry, adjusted to 60 °F), (Estimated based on previous biogas fuel analyses for source tests for Permits N-1660-7 & -9)
- Molar Specific Volume = 379.5 scf/lb-mol (60°F)
- The proposed experimental sulfur removal system that will require periods for commissioning and optimization. The duration of the commissioning period will be limited to no more than 60 days and optimization of the sulfur removal system shall be limited to no more than six months.
- Maximum sulfur content of the digester gas combusted in the backup flare and the engines: First 30 days commissioning - 4,000 ppmv as H_2S; Next 15 days of commissioning – 2,500 ppmv; Remaining 15 days of commissioning – 1,000 ppmv; optimization of sulfur removal system – 200 ppmv; after completion of the optimization period – 50 ppmv.
- To ensure that there is no a violation of the Ambient Air Quality Standard for SO_2, No more than one of permit units S-7831-1, -2, and -3 (digester gas-fired engines and flare) will be allowed to operate at any one time until the measured sulfur content of the digester gas is 1,000 ppmv or less.
- As discussed above, after optimization, the experimental sulfur removal system must reduce the maximum sulfur content of the digester gas to 50 ppmv or the applicant will be required to install an additional or alternative sulfur removal system to reach this level. Although the final maximum sulfur content of the digester gas combusted in the proposed engines and flare will be 50 ppmv, SO_X emissions after commissioning of the sulfur removal system will be calculated based on 200 ppmv to ensure that SO_X emissions during optimization of the sulfur removal system are not underestimated.

Assumptions for Digester Gas-Fired Backup Flare for the Digester (S-7831-1)

- The maximum amount of biogas that can be combusted in the flare on a daily basis will be based on the maximum production rate of 15,000 scf/hr and operation of the flare for 24 hrs/day (360,000 scf/day).
- The maximum amount of biogas that can be combusted in the flare on an annual basis will be 13.14 MMscf/yr (proposed by applicant and based on the flare combusting a maximum of 10% of the biogas produced by the digester).
- During commissioning of the sulfur removal system, SO_X emissions from the flare will be limited to no more than 140.7 lb/day.

Assumptions for Digester Gas-Fired IC Engines (S-7831-2 & -3)

- Each of the engines will be permitted to operate 24 hours/day and 365 days per year

- bhp to Btu/hr conversion: 2,545 Btu/hp-hr
- Thermal efficiency of engine ≈ 33%
- The hydrogen/syngas injection systems that will be installed on the proposed IC engines to satisfy the BACT requirement for NO_X are expected to reduce NO_X emissions from the engines to 0.15 g/bhp-hr; therefore NO_X emissions from the engines will be calculated based on this emission factor. However, to ensure that all potential NSR requirements (i.e. public notice and any applicable offsetting) are satisfied if it is later determined that the emission factor must be raised because the units cannot consistently meet 0.15 g/bhp-hr, NO_X emissions from the engines will also be calculated in this evaluation for the worst-case NO_X emission factor of 0.6 g/bhp-hr, which is the current achieved in practice BACT level.

B. Emission Factors

Dairy Permits

The emission factors for PM_{10}, VOC, and NH_3 given in the following tables will be used to calculate the combined emissions from the dairy and the pre/post-project emissions from the following permit units: the cow housing permit (permit S-5834-2) and the liquid manure handling system (permit S-5834-3).

PM_{10} Emission Factors for the Dairy

The following table lists the PM_{10} emission factors for the animals at the dairy.

PM_{10} Emission Factors for Cattle at the Dairy		
Type of Cow	Emission Factor (lb-PM_{10}/head-yr)	Source
Milk Cows, Dry Cows, & Bulls in Freestalls	**1.37**	Based on a Summer 2003 study by Texas A&M ASAE at a West Texas Dairy
Milk Cows, Dry Cows, & Bulls in Open Corrals	**5.46**	Based on a Summer 2003 study by Texas A&M ASAE at a West Texas Dairy
Heifers in Open Corrals	**10.55**	Based on a USDA/UC Davis report quantifying dairy and feedlot emissions in Tulare & Kern Counties (April 2001)
Calves in pens	**1.37**	SJVAPCD
Calves in Calf Hutches	**0.343**	SJVAPCD: 75% control for calf hutches based on SJVAPCD Dairy and Feedlot PM_{10} Control Efficiency Memo

VOC and NH_3 Emission Factors for the Dairy

The following tables list the VOC and NH_3 emission factors for the animals at the dairy. These emission factors and the control efficiencies given in the assumptions above will be used to calculate the pre-project and post-project VOC and NH_3 emissions from the dairy.

Emission Factors for Dairy Cows				
Type of Cow	Open Corral		Freestall Housing	
	(lb-VOC/cow-yr)	(lb-NH_3/cow-yr)	(lb-VOC/cow-yr)	(lb-NH_3/cow-yr)
Milk Cow	19.3[2]	74.0	21.0[3]	74.0
Dry Cow	11.9	45.4	12.9	45.4
Heifer (15 to 24 months)	8.3	31.8	9.0	31.8
Heifer (7 to 14 months)	7.2	27.8	7.9	27.8
Heifer (3 to 6 months)	6.6	25.1	7.1	25.1
Calf (under 3 months)	6.2	23.6	6.7	23.6
Mature Bull[4]	11.1	42.6	12.1	42.6

Breakdown of Emissions Factor for Milk Cows in Freestalls[3]		
Permit Units	VOC Emissions (lb/cow-yr)	NH_3 Emissions (lb/cow-yr)
Milking Center	0.9	1.2
Cow Housing & Feed	12.4	28
Lagoons/Storage Ponds	2.7	15.7
Land Application	5.0	29.1
Total	**21.0**	**74**

Cow Housing Emission Factors for Dairy Cows[5]					
Type of Cow	Open Corral Housing		Freestall Housing		Source
	(lb-VOC/cow-yr)	(lb-NH_3/cow-yr)	(lb-VOC/cow-yr)	(lb-NH_3/cow-yr)	
Milk Cow	12.4	32.3	12.4	28.0	SJVAPCD
Dry Cow	8.2	20.6	8.2	17.9	SJVAPCD
Heifer (15 to 24 months)	5.7	14.4	5.7	12.6	SJVAPCD
Heifer (7 to 14 months)	5.0	12.6	5.0	11.0	SJVAPCD
Heifer (3 to 6 months)	4.5	11.4	4.5	9.9	SJVAPCD
Calf (under 3 months)	4.3	10.7	4.3	9.3	SJVAPCD
Mature Bull	7.7	19.3	7.7	16.8	SJVAPCD

The emissions from the lagoons/storage ponds and the IC engines are the only non-fugitive emissions at the dairy; therefore, the following emission factors are needed to determine if the emissions from this facility exceed the VOC major source threshold.

[2] This emission factor is from "APCO's Determination of VOC Emission Factors for Dairies" report.
[3] This emission factor was developed in an internal District document entitled "*Breakdown of Dairy VOC Emission Factor into Permit Units*", however, the basis of the emission factor was taken from the "APCO's Determination of VOC Emission Factors for Dairies" report.
[4] The emission factor for mature bulls is assumed to be similar to the feedlot cattle emission factor.
[5] The emission factor for the milk cow is based on an internal document entitled "*Breakdown of Dairy VOC Emission Factor into Permit Units*". The emission factor for the other cows were developed by taking the ratio of manure generated by the different types of cows to the milk cow and multiplying it by the milk cow VOC emission factor.

Lagoon/Storage Pond Emission Factors for Dairy Cows [5]					
Type of Cow	Open Corral Housing		Freestall Housing		Source
	(lb-VOC/cow-yr)	(lb-NH_3/cow-yr)	(lb-VOC/cow-yr)	(lb-NH_3/cow-yr)	
Milk Cow	2.3	15.5	2.7	15.7	SJVAPCD
Dry Cow	1.4	9.5	1.7	9.6	SJVAPCD
Heifer (15 to 24 months)	1.0	6.7	1.2	6.7	SJVAPCD
Heifer (7 to 14 months)	0.9	5.8	1.0	5.9	SJVAPCD
Heifer (3 to 6 months)	0.8	5.3	0.9	5.3	SJVAPCD
Calf (under 3 months)	0.7	4.9	0.9	5.0	SJVAPCD
Mature Bull	1.3	8.9	1.6	9.0	SJVAPCD

Liquid Manure Land Application Emission Factors for Dairy Cows[5]					
Type of Cow	Open Corral Housing		Freestall Housing		Source
	(lb-VOC/cow-yr)	(lb-NH_3/cow-yr)	(lb-VOC/cow-yr)	(lb-NH_3/cow-yr)	
Milk Cow	3.7	24.9	5.0	29.1	SJVAPCD
Dry Cow	2.3	15.3	3.1	17.9	SJVAPCD
Heifer (15 to 24 months)	1.6	10.7	2.1	12.5	SJVAPCD
Heifer (7 to 14 months)	1.4	9.3	1.9	10.9	SJVAPCD
Heifer (3 to 6 months)	1.3	8.5	1.7	9.9	SJVAPCD
Calf (under 3 months)	1.2	7.9	1.6	9.3	SJVAPCD
Mature Bull	2.1	14.3	2.9	16.8	SJVAPCD

Solid Manure Handling

An emissions factor for solid manure has not yet been fully established. Results of emissions studies by Dr. C.E. Schmidt at a Merced dairy indicate that VOC and NH_3 emissions from solid manure at a dairy are minimal.[6] Therefore, any emission reductions from solid manure resulting from installation of the covered lagoon digesters will not be quantified at this time.

Feed Handling and Storage

The feed handling and storage permit will not be modified under this project. Although there are potentially significant emissions from the feed handling and storage operation, an emission factor for feed has not been established. Therefore, emissions from feed will not be calculated in this evaluation.

Hydrogen Sulfide (H_2S) from Dairy Permits

Currently, there is no approved emission factor or data for Hydrogen Sulfide (H_2S) emissions from dairy operations. Therefore, H_2S emissions will not be calculated for the dairy permit units in this project. The District expects that research will be completed in

[6] "Assessment of Reactive Organic Gases and Amines from a Northern California Dairy Using the USEPA Surface Emission Isolation Flux Chamber", CE Schmidt, Tom Card, EMC, & Patrick Gaffney, CARB (http://www.valleyair.org/Workshops/postings/03-23-05/LivestockSymposiumCES.pdf)

the near future, which may be used to establish an emission factor for Hydrogen Sulfide from the dairy permit units.

Emissions Factors for the Digester System Backup Flare (S-7831-1)

SO_X Emissions Factors for the Digester System Backup Flare

SO_X emissions for the backup flare are based on the maximum sulfur content of the dairy digester gas during commissioning, optimization, and normal operation of the experimental sulfur removal system.

SO_X Emission Factors for Digester Gas Backup Flare (S-7831-1-0)				
Period	ppmvd in fuel gas	lb/scf*	lb/MMBtu*	Source
First 30 days of Commissioning	4,000 ppmv	6.75×10^{-4}	1.125	Proposed by Applicant
Next 15 days of Commissioning	2,500 ppmv	4.22×10^{-4}	0.7033	Proposed by Applicant
Final 15 days of Commissioning/ More than one unit allowed to operate	1,000 ppmv	1.69×10^{-4}	0.2813	Proposed by Applicant/ required to ensure that there is no violation of AAQS for SO2
Optimization of Sulfur Removal System	200 ppmv	3.38×10^{-5}	0.0563	Proposed by Applicant (Used to calculate annual emissions after commissioning)
Final Sulfur Content Limit	50 ppmv	8.44×10^{-6}	0.0141	Achieved in Practice BACT/ Proposed by Applicant

*Example calculation of SO_X emission factors shown below:

SO_X – 4,000 ppmvd H_2S in fuel gas

$$\frac{4{,}000\ \text{ppmv}\ H_2S}{10^6} \times \frac{32.06\ \text{lb S}}{\text{lb}\ H_2S} \times \frac{\text{lb - mole}}{379.5\ \text{ft}^3} \times \frac{64.06\ \text{lb}\ SO_2}{32.06\ \text{S lb}} = 6.752 \times 10^{-4}\ \frac{\text{lb SOx}}{\text{scf}} \times \frac{\text{ft}^3}{600\ \text{Btu}} \times \frac{10^6\ \text{Btu}}{\text{MMBtu}} = 1.125\ \frac{\text{lb SOx}}{\text{MMBtu}}$$

NO_X, PM_{10}, CO, & VOC Emissions Factors for the Digester System Backup Flare

The emissions factor for NO_X was proposed by the applicant in order to satisfy District's achieved in practice BACT requirement for digester gas-fired flares. The emissions factors for PM_{10} and CO were proposed by the applicant and based on District FYI 83 – Use of AP-42 Section 13.5 Emission Factors for Industrial Flares. The VOC emission factor is taken from Section 5.7 of District Rule 4311. The NO_X, PM_{10}, CO, & VOC_emissions factors for the digester gas backup flare are given in the following table:

Emission Factors for Digester Gas Backup Flare (S-7831-1-0)			
Pollutant	lb/MMBtu	lb/scf*	Source
NO_X	0.06	3.6×10^{-5}	Achieved in Practice BACT/ Proposed by Applicant
PM_{10}	0.008	4.8×10^{-6}	Proposed by Applicant / District FYI 83
CO	0.37	2.22×10^{-4}	Proposed by Applicant / District FYI 83
VOC	0.0051	3.06×10^{-6}	District Rule 4311

*lb/scf equivalent equals lb/MMBtu x 0.0006 MMBtu/scf

Emissions Factors for the Digester Gas-Fired IC Engines (S-7831-2 & -3)

SO_X Emissions Factors for the Digester Gas-Fired IC Engines

SO_X emissions for the digester gas-fired IC engines are based on the maximum sulfur content of the dairy digester gas during commissioning, optimization, and normal operation of the experimental sulfur removal system.

SO_X Emission Factors for Digester Gas-Fired IC Engines (S-7831-2-0 & -3-0)				
Period	ppmvd in fuel gas	lb/MMBtu	g/bhp-hr*	Source
First 30 days of Commissioning	4,000 ppmv	1.125	3.94	Proposed by Applicant
Next 15 days of Commissioning	2,500 ppmv	0.7033	2.46	Proposed by Applicant
Final 15 days of Commissioning/ More than one unit allowed to operate	1,000 ppmv	0.2813	0.984	Proposed by Applicant/ required to ensure that there is no violation of AAQS for SO2
Optimization of Sulfur Removal System	200 ppmv	0.0563	0.197	Proposed by Applicant (Used to calculate annual emissions after commissioning)
Final Sulfur Content Limit	50 ppmv	0.0141	0.0492	Achieved in Practice BACT/ Proposed by Applicant

*Example calculation of g/bhp-hr SO_X emission factors shown below:

SO_X – 4,000 ppmvd H_2S in fuel gas = 1.125 lb-SO_X/MMBTU (example calculation above)

$$1.125\,\frac{\text{lb SOx}}{\text{MMBtu}} \times \frac{1\,\text{MMBtu}}{10^6\,\text{Btu}} \times \frac{\text{Btu}_{in}}{0.33\,\text{Btu}_{out}} \times \frac{2{,}545\,\text{Btu}}{\text{hp-hr}} \times \frac{453.59\,\text{g}}{\text{lb}} = 3.94\,\frac{\text{g SOx}}{\text{bhp-hr}}$$

NO_X, PM_{10}, CO, & VOC Emissions Factors for the Digester Gas-Fired IC Engines

The emission factors for NO_X (goal of 0.15 g/bhp-hr and a maximum limit of 0.60 g/bhp-hr) and VOC (0.20 g/bhp-hr) from the proposed engines were proposed by the applicant to satisfy District BACT requirements. The emission factor for CO (2.20 g/bhp-hr) was also proposed by the applicant. PM_{10} emissions from the proposed engine are assumed to be similar to natural gas on a lb/MMBtu basis.

Emission Factors for Digester Gas-Fired Engine			
Pollutant	g/hp-hr	lb/MMBtu	Source
NO_X	0.15	0.0429	BACT Requirement; Proposed by Applicant – See equation below
NO_X Worst-case	0.60	0.172	Worst-Case Achieved in Practice BACT Requirement
PM_{10}	0.07	0.01941	AP-42 (7/00) Table 3.2-3 (Value for Natural Gas)
CO	2.20	0.629	Proposed by Applicant
VOC	0.20	0.0572	Proposed by Applicant/BACT Requirement

*Example calculation of lb/MMBtu emissions factors shown below:

NO_X – 0.15 g/bhp-hr

$$0.15\,\frac{\text{g NOx}}{\text{bhp-hr}} \times \frac{1\,\text{lb}}{453.59\,\text{g}} \times \frac{1\,\text{hp-hr}}{2{,}545\,\text{Btu}} \times \frac{0.33\,\text{Btu}_{out}}{1\,\text{Btu}_{in}} \times \frac{10^6\,\text{Btu}}{1\,\text{MMBtu}} = 0.429\,\frac{\text{lb NOx}}{\text{MMBtu}}$$

C. Calculations

1. Pre-Project Potential to Emit (PE1)

PE1 for Cow Housing Permit at Moonlight Dairy (ATC S-5834-2-1)

There will be no modifications to the cow housing permit under this project. Manure will continue to be flushed from the lanes and walkways but will enter the plug flow anaerobic digester prior to entering the lagoon or storage ponds. Although the cow housing permit unit is not being modified under this project, emissions from the cow housing permit will be calculated for reference purposes.

The emissions for PM_{10}, VOC, and NH_3 from the cow housing permit unit are calculated in the tables below:

PE1 for PM_{10} and NH_3 from the Cow Housing Permit

Pre-Project Potential to Emit (PE1) for PM_{10} and NH_3 from Cow Housing Permit (ATC S-5834-2-1)							
Type of Cow	**# of Cows**		**EF_{PM10} (lb/cow)**	**EF_{NH3} (lb/cow)**		**lb-PM_{10}/yr**	**lb-NH_3/yr**
Milk Cow (Freestall Barn with Flush)	2,400	x	1.37		=	3,288	
				28.0			67,200
Dry Cow (Corral with Flush)	325	x	5.46		=	1,775	
				20.6			6,695
Heifer (15-24 month) (Corral with Flush)	800	x	10.55		=	8,440	
				14.4			11,520
Heifer (7-14 month) (Corral with Flush)	800	x	10.55		=	8,440	
				12.6			10,080
Heifer (3-6 month) (Corral with Flush)	200	x	10.55		=	2,110	
				11.4			2,280
Calf (0-3 month) (Calf hutches)	350	x	0.343		=	120	
				9.3			3,255
Bull (Corral with Flush)	30	x	5.46		=	164	
				19.3			579
PE1 for PM_{10} and NH_3 from Cow Housing Permit (ATC S-5834-2-1)				**lb/yr**		**24,337**	**101,609**
				lb/day = lb/yr÷ (365 day/yr)		**66.7**	**278.4**

PE1 for VOC from the Cow Housing Permit

The dairy currently feeds all animals in accordance with NRC guidelines. Therefore, the control efficiency for feeding animals to NRC guidelines will be used when calculating pre-project VOC emissions from the Cow Housing Permit.

PE1 for VOC from Cow Housing Permit (ATC S-5834-2-1)				
Type of Cow	**# of Cows**	**Uncontrolled EF (lb-VOC/hd-yr)**	**Control(s)**	**Emissions (lb-VOC/yr)**
Milk Cow (Freestall)	2,400	12.4	Feeding to NRC guidelines (5%) x (1 - 0.05) =	**28,272**
Dry Cow (Open Corral)	325	8.2	Feeding to NRC guidelines (5%) x (1 - 0.05) =	**2,532**
Large Heifer (15-24 mo.) (Open Corral)	800	5.7	Feeding to NRC guidelines (5%) x (1 - 0.05) =	**4,332**
Medium Heifer (7 - 14 mo.) (Open Corral)	800	5.0	Feeding to NRC guidelines (5%) x (1 - 0.05) =	**3,800**
Small Heifer (3 - 6 mo.) (Open Corral)	200	4.5	Feeding to NRC guidelines (5%) x (1 - 0.05) =	**855**
Calves (under 3 month)	350	4.3	Feeding to NRC guidelines (5%) x (1 - 0.05) =	**1,430**
Bull (Open Corral)	30	7.7	Feeding to NRC guidelines (5%) x (1 - 0.05) =	**219**
PE1 for VOC from Cow Housing Permit (ATC S-5834-2-1)			**lb/yr**	**41,440**
			lb/day = lb/yr÷ (365 day/yr)	**113.5**

Total PE1 for Cow Housing Permit at Moonlight Dairy (ATC S-5834-2-1)

Pre-Project Potential to Emit (PE1) S-5834-2-1		
	Daily Emissions (lb/day)	Annual Emissions (lb/year)
NO_X	0	0
SO_X	0	0
PM_{10}	66.7	24,337
CO	0	0
VOC	113.5	41,440
NH_3	278.4	101,609

PE1 for Liquid Manure Handling System at Moonlight Dairy (Lagoons/Storage Ponds & Liquid Manure Land Application) (ATC S-5834-3-1)

As stated above, the dairy currently feeds all animals in accordance with NRC guidelines. Therefore, the control efficiency for feeding animals to NRC guidelines will be used when calculating pre-project VOC emissions from the lagoons/storage ponds and liquid manure land application.

The pre-project emissions for VOC and NH_3 from the liquid manure handling system are calculated in the tables below.

PE1 for Lagoon(s)/Storage Pond(s):

VOC

The pre-project VOC emissions from the lagoons/storage ponds are calculated in the table below:

PE1 for VOC from the Lagoons/Storage Ponds at Moonlight Dairy (ATC S-5834-3-1)				
Type of Cow	**# of Cows**	**Uncontrolled EF (lb-VOC/hd-yr)**	**Control(s)**	**Emissions (lb-VOC/yr)**
Milk Cow (Freestall Barn with Flush)	2,400	2.7	Feeding to NRC guidelines (5%) x (1 - 0.05) =	**6,156**
Dry Cow (Corral with Flush)	325	1.4	Feeding to NRC guidelines (5%) x (1 - 0.05) =	**432**
Heifer (15-24 month) (Corral with Flush)	800	1.0	Feeding to NRC guidelines (5%) x (1 - 0.05) =	**760**
Heifer (7-14 month) (Corral with Flush)	800	0.9	Feeding to NRC guidelines (5%) x (1 - 0.05) =	**684**
Heifer (3-6 month) (Corral with Flush)	200	0.8	Feeding to NRC guidelines (5%) x (1 - 0.05) =	**152**
Calf (0-3 month) (Calf hutches)	350	0.9	Feeding to NRC guidelines (5%) x (1 - 0.05) =	**299**
Bull (Corral with Flush)	30	1.3	Feeding to NRC guidelines (5%) x (1 - 0.05) =	**37**
PE1 for VOC from the Lagoons/Storage Ponds (S-5834-3-1)			**lb/yr**	**8,520**
			lb/day = lb/yr÷ (365 day/yr)	**23.3**

NH_3

The pre-project NH_3 emissions from the lagoons/storage ponds are calculated in the table below:

PE1 for NH_3 from Lagoons/Storage Ponds at Moonlight Dairy (ATC S-5834-3-1)					
Type of Cow	**# of Cows**		**EF_{NH3} (lb/cow)**		**lb-NH_3/yr**
Milk Cow (Freestall Barn with Flush)	2,400	x	15.7	=	37,680
Dry Cow (Corral with Flush)	325	x	9.5	=	3,088
Heifer (15-24 month) (Corral with Flush)	800	x	6.7	=	5,360
Heifer (7-14 month) (Corral with Flush)	800	x	5.8	=	4,640
Heifer (3-6 month) (Corral with Flush)	200	x	5.3	=	1,060
Calf (0-3 month) (Calf hutches)	350	x	5.0	=	1,750
Bull (Corral with Flush)	30	x	8.9	=	267
PE1 for NH_3 from Lagoon/Storage Pond (ATC S-5834-3-1)			**lb/yr**		**53,845**
			lb/day = lb/yr÷ (365 day/yr)		**147.5**

PE1 for Liquid Manure Land Application:

VOC

The pre-project VOC emissions from the liquid manure land application are calculated in the table below:

PE1 for VOC from Liquid Manure Land Application at Moonlight Dairy (ATC S-5834-3-1)				
Type of Cow	**# of Cows**	**Uncontrolled EF (lb-VOC/hd-yr)**	**Control(s)**	**Emissions (lb-VOC/yr)**
Milk Cow (Freestall Barn with Flush)	2,400	5.0	Feeding to NRC guidelines (5%) x (1 - 0.05) =	**11,400**
Dry Cow (Corral with Flush)	325	2.3	Feeding to NRC guidelines (5%) x (1 - 0.05) =	**710**
Heifer (15-24 month) (Corral with Flush)	800	1.6	Feeding to NRC guidelines (5%) x (1 - 0.05) =	**1,216**
Heifer (7-14 month) (Corral with Flush)	800	1.4	Feeding to NRC guidelines (5%) x (1 - 0.05) =	**1,064**
Heifer (3-6 month) (Corral with Flush)	200	1.3	Feeding to NRC guidelines (5%) x (1 - 0.05) =	**247**
Calf (0-3 month) (Calf hutches)	350	1.6	Feeding to NRC guidelines (5%) x (1 - 0.05) =	**532**
Bull (Corral with Flush)	30	2.1	Feeding to NRC guidelines (5%) x (1 - 0.05) =	**60**
PE1 for VOC from Liquid Manure Land Application (ATC S-5834-3-1)			**lb/yr**	**15,229**
			lb/day = lb/yr÷ (365 day/yr)	**41.7**

NH_3

The pre-project NH_3 emissions from the liquid manure land application are calculated in the table below:

PE1 for NH_3 from Liquid Manure Land Application at Moonlight Dairy (ATC S-5834-3-1)					
Type of Cow	**# of Cows**		**EF_{NH3} (lb/cow)**		**lb-NH_3/yr**
Milk Cow (Freestall Barn with Flush)	2,400	x	29.1	=	69,840
Dry Cow (Corral with Flush)	325	x	15.3	=	4,973
Heifer (15-24 month) (Corral with Flush)	800	x	10.7	=	8,560
Heifer (7-14 month) (Corral with Flush)	800	x	9.3	=	7,440
Heifer (3-6 month) (Corral with Flush)	200	x	8.5	=	1,700
Calf (0-3 month) (Calf hutches)	350	x	9.3	=	3,255
Bull (Corral with Flush)	30	x	14.3	=	429
PE1 for NH_3 from Liquid Manure Land Application (ATC S-5834-3-1)			**lb/yr**		**96,197**
			lb/day = lb/yr÷ (365 day/yr)		**263.6**

Total Pre-Project Emissions from Liquid Manure Handling System at Moonlight Dairy (ATC S-5834-3-1):

Pre-Project Potential to Emit (PE1) (ATC S-5834-3-1)						
Pollutant	Lagoon Emissions (lb/year)	+	Land Application (lb/year)	=	**Total from Liquid Manure Handling**	
					Annual Emissions (lb/year)	Daily Emissions (lb/day)
NO_x	0	+	0	=	0	0.0
SO_x	0	+	0	=	0	0.0
PM_{10}	0	+	0	=	0	0.0
CO	0	+	0	=	0	0.0
VOC	8,520	+	15,229	=	23,749	65.1
NH_3	53,845	+	96,197	=	150,042	411.1

PE1 for Digester System Backup Flare (S-7831-1-0)

Since the proposed flare is a new unit, PE1 = 0 for all affected pollutants.

PE1 for 675 bhp Digester Gas-Fired Lean Burn IC Engines (S-7831-2-0 & -3-0)

Since the proposed IC engines are new units, PE1 = 0 for all affected pollutants.

2. Post Project Potential to Emit (PE2)

PE2 for Cow Housing Permit at Moonlight Dairy (ATC S-5834-2-1)

As stated above, the Cow Housing Permit Unit at this dairy will not be modified for this project. Therefore, PE2 for the cow housing permit unit is equal to PE1 as calculated in Section VII.C.1 above and summarized in the table below.

Post-Project Potential to Emit (PE2) S-5834-2-1		
	Daily Emissions (lb/day)	Annual Emissions (lb/year)
NO_X	0	0
SO_X	0	0
PM_{10}	66.7	24,337
CO	0	0
VOC	113.5	41,440
NH_3	278.4	101,609

PE2 for Liquid Manure Handling System at Moonlight Dairy (Lagoons/Storage Ponds & Liquid Manure Land Application) (ATC S-5834-3-2)

After completion of the proposed project, this dairy will continue to feed animals in accordance with NRC guidelines. In addition, after completion of the project, the dairy will utilize a plug flow anaerobic digester to produce biogas from the manure generated by the cattle at the dairy. Therefore, the control efficiency for these practices will be used when calculating post-project VOC emissions from the lagoons/storage ponds and liquid manure land application.

The post-project VOC emissions from the lagoons/storage ponds and digester effluent are calculated in the table below:

PE2 for VOC from the Lagoons/Storage Ponds at Moonlight Dairy (ATC S-5834-3-2)					
Type of Cow	**# of Cows**	**Uncontrolled EF (lb-VOC/hd-yr)**	**Control(s)**		**Emissions (lb-VOC/yr)**
Milk Cow (Freestall Barn with Flush)	2,400	2.7	Feeding to NRC guidelines (5%) x (1 - 0.05)	Plug Flow Anaerobic Digester (60%) x (1 - 0.60) =	**2,462**
Dry Cow (Corral with Flush)	325	1.4	Feeding to NRC guidelines (5%) x (1 - 0.05)	Plug Flow Anaerobic Digester (60%) x (1 - 0.60) =	**173**
Heifer (15-24 month) (Corral with Flush)	800	1.0	Feeding to NRC guidelines (5%) x (1 - 0.05)	Plug Flow Anaerobic Digester (60%) x (1 - 0.60) =	**304**
Heifer (7-14 month) (Corral with Flush)	800	0.9	Feeding to NRC guidelines (5%) x (1 - 0.05)	Plug Flow Anaerobic Digester (60%) x (1 - 0.60) =	**274**
Heifer (3-6 month) (Corral with Flush)	200	0.8	Feeding to NRC guidelines (5%) x (1 - 0.05)	Plug Flow Anaerobic Digester (60%) x (1 - 0.60) =	**61**
Calf (0-3 month) (Calf hutches)	350	0.9	Feeding to NRC guidelines (5%) x (1 - 0.05)	Plug Flow Anaerobic Digester (60%) x (1 - 0.60) =	**120**
Bull (Corral with Flush)	30	1.3	Feeding to NRC guidelines (5%) x (1 - 0.05)	Plug Flow Anaerobic Digester (60%) x (1 - 0.60) =	**15**
PE2 for VOC from Lagoons/Storage Ponds (ATC S-5834-3-2)				**lb/yr**	**3,409**
				lb/day = lb/yr÷ (365 day/yr)	**9.3**

NH_3

The post-project NH_3 emissions from the lagoons/storage ponds and digester effluent are calculated in the table below:

PE2 for NH_3 from Lagoon/Storage Pond at Moonlight Dairy (ATC S-5834-3-2)					
Type of Cow	**# of Cows**		**EF_{NH3} (lb/cow)**		**lb-NH_3/yr**
Milk Cow (Freestall Barn with Flush)	2,400	x	15.7	=	37,680
Dry Cow (Corral with Flush)	325	x	9.5	=	3,088
Heifer (15-24 month) (Corral with Flush)	800	x	6.7	=	5,360
Heifer (7-14 month) (Corral with Flush)	800	x	5.8	=	4,640
Heifer (3-6 month) (Corral with Flush)	200	x	5.3	=	1,060
Calf (0-3 month) (Calf hutches)	350	x	5.0	=	1,750
Bull (Corral with Flush)	30	x	8.9	=	267
PE2 for NH_3 from Lagoon/Storage Pond (ATC S-5834-3-2)			**lb/yr**		**53,845**
			lb/day = lb/yr÷ (365 day/yr)		**147.5**

PE2 for Liquid Manure Land Application:

VOC

The post-project VOC emissions from lagoons/storage ponds and digester effluent are calculated in the table below:

PE2 for VOC from Liquid Manure Land Application at Moonlight Dairy (ATC S-5834-3-1)					
Type of Cow	**# of Cows**	**Uncontrolled EF (lb-VOC/hd-yr)**	**Control(s)**		**Emissions (lb-VOC/yr)**
Milk Cow (Freestall Barn with Flush)	2,400	5.0	Feeding to NRC guidelines (5%) x (1 - 0.05)	Plug Flow Anaerobic Digester (60%) x (1 - 0.60) =	**4,560**
Dry Cow (Corral with Flush)	325	2.3	Feeding to NRC guidelines (5%) x (1 - 0.05)	Plug Flow Anaerobic Digester (60%) x (1 - 0.60) =	**284**
Heifer (15-24 month) (Corral with Flush)	800	1.6	Feeding to NRC guidelines (5%) x (1 - 0.05)	Plug Flow Anaerobic Digester (60%) x (1 - 0.60) =	**486**
Heifer (7-14 month) (Corral with Flush)	800	1.4	Feeding to NRC guidelines (5%) x (1 - 0.05)	Plug Flow Anaerobic Digester (60%) x (1 - 0.60) =	**426**
Heifer (3-6 month) (Corral with Flush)	200	1.3	Feeding to NRC guidelines (5%) x (1 - 0.05)	Plug Flow Anaerobic Digester (60%) x (1 - 0.60) =	**99**
Calf (0-3 month) (Calf hutches)	350	1.6	Feeding to NRC guidelines (5%) x (1 - 0.05)	Plug Flow Anaerobic Digester (60%) x (1 - 0.60) =	**213**
Bull (Corral with Flush)	30	2.1	Feeding to NRC guidelines (5%) x (1 - 0.05)	Plug Flow Anaerobic Digester (60%) x (1 - 0.60) =	**24**
PE2 for VOC from Lagoons/Storage Ponds (ATC S-5834-3-2)				**lb/yr**	**6,092**
				lb/day = lb/yr÷ (365 day/yr)	**16.7**

NH_3

The post-project NH_3 emissions from the liquid manure land application are calculated in the table below:

PE2 for NH_3 from Liquid Manure Land Application at Moonlight Dairy (ATC S-5834-3-1)					
Type of Cow	**# of Cows**		**EF_{NH3} (lb/cow)**		**lb-NH_3/yr**
Milk Cow (Freestall Barn with Flush)	2,400	x	29.1	=	69,840
Dry Cow (Corral with Flush)	325	x	15.3	=	4,973
Heifer (15-24 month) (Corral with Flush)	800	x	10.7	=	8,560
Heifer (7-14 month) (Corral with Flush)	800	x	9.3	=	7,440
Heifer (3-6 month) (Corral with Flush)	200	x	8.5	=	1,700
Calf (0-3 month) (Calf hutches)	350	x	9.3	=	3,255
Bull (Corral with Flush)	30	x	14.3	=	429
PE2 for NH_3 from Liquid Manure Land Application (ATC S-5834-3-1)			**lb/yr**		**96,197**
			lb/day = lb/yr÷ (365 day/yr)		**263.6**

Total Post-Project Emissions from Liquid Manure Handling System at Moonlight Dairy (ATC S-5834-3-2):

Post-Project Potential to Emit (PE2) (ATC S-5834-3-2)						
Pollutant	Lagoon Emissions (lb/year)	+	Land Application (lb/year)	=	**Total from Liquid Manure Handling**	
					Annual Emissions (lb/year)	Daily Emissions (lb/day)
NO_x	0	+	0	=	0	0.0
SO_x	0	+	0	=	0	0.0
PM_{10}	0	+	0	=	0	0.0
CO	0	+	0	=	0	0.0
VOC	3,409	+	6,092	=	9,501	26.0
NH_3	53,845	+	96,197	=	150,042	411.1

PE2 for Digester System Backup Flare (ATC S-7831-1-0)

The daily and annual Post-Project Potential to Emit (PE2) for the flare for the proposed digester system will be calculated below.

Daily SO_X Emissions from the Flare during and after Commissioning of the Experimental Sulfur Removal System:

During commissioning of the sulfur removal system, the sulfur content of the digester gas combusted in the flare will be limited to 4,000 ppmv (6.75×10^{-4} lb-SO_X/scf) for the first 30 days of commissioning, limited to 2,500 ppmv (4.22×10^{-4} lb-SO_X/scf) for the next 15 days of commissioning, and limited to 1,000 ppmv (1.69×10^{-4} lb-SO_X/scf) for any remaining days of commissioning. The flare will also be limited by permit condition to no more than 140.7 lb-SO_X/day during commissioning. Since at the maximum daily flow rate the allowed sulfur concentration would result in SO_X emissions greater than 140.7 lb/day for the first 45 days of the commissioning period, the maximum daily SO_X emissions from the flare during the first 45 days of the 60-day commissioning period will be based on 140.7 lb-SO_X/day.

To operate more than one unit at once the sulfur content of the digester gas must be ≤ 1,000 ppmv, must be ≤ 200 ppmv during testing and optimization of the experimental sulfur removal system, and must achieve a final limit of ≤ 50 ppmv. Although the final Sulfur content limit will be 50 ppmv, daily and annual SO_X emissions after commissioning of the sulfur removal system will be calculated based on 200 ppmv to ensure that emissions during the first year are not underestimated.

Maximum daily emissions during these periods are calculated in the table below:

Daily PE2 for SO_X from Digester System Backup Plant Flare (S-7831-1-0)							
Period	Emission Factor (lb/scf)	x	Gas Flow Rate (scf/hr)	x	Daily Hours of Operation (hrs/day)	=	PE2 (lb/day)
Final 15 days of Commissioning/ More than one unit allowed to operate (1,000 ppmv)	0.000169	x	15,000	x	24	=	**60.8**
Optimization of Sulfur Removal System (200 ppmv)	0.0000338	x	15,000	x	24	=	**12.2**
Final Sulfur Content Limit (50 ppmv)	0.00000844	x	15,000	x	24	=	**3.0**

Maximum Annual SO_X Emissions from the Flare including Commissioning:

The maximum annual SO_X emissions from the flare are calculated by assuming that the flare is used throughout the first 45 days of the commissioning period and then calculating the remaining amount of gas that can be combusted in the flare during the last 15 days of the commissioning period and adding the SO_X emissions combustion of this gas to the SO_X emissions during the first 45 days of commissioning. The amount of digester gas that could be combusted after the first 45 days of commissioning is calculated as follows:

13.14×10^6 scf – (30 day x 140.7 lb-SO_X/day ÷ (6.75×10^{-4} lb-SO_X/scf)) – (15 day x 140.7 lb-SO_X/day ÷ (4.22×10^{-4} lb-SO_X/scf)) = 1,885,482 scf

Maximum annual SO_X emissions from the flare are calculated as follows:

45 days x 140.7 lb-SO_X/day + 1,885,482 scf x 1.69×10^{-4} lb-SO_X/scf = **6,520 lb-SO_X/yr**

Maximum Daily and Annual SO_X Emissions from the Flare after completing Commissioning of the Sulfur Removal System:

The maximum daily and annual emissions from the flare after commissioning of the sulfur removal system are calculated in the table below. SO_X emissions are calculated based on 200 ppmv sulfur in the digester gas.

Daily PE2 for the Digester System Backup Plant Flare (S-7831-1-0) After Commissioning of the Sulfur Removal System							
Pollutant	Emission Factor (lb/scf)	x	Gas Flow Rate (scf/hr)	x	Daily Hours of Operation (hrs/day)	=	PE2 (lb/day)
NO_X	0.000036	x	15,000	x	24	=	**13.0**
SO_X	0.0000338	x	15,000	x	24	=	**12.2**
PM_{10}	0.0000048	x	15,000	x	24	=	**1.7**
CO	0.000222	x	15,000	x	24	=	**79.9**
VOC	0.00000306	x	15,000	x	24	=	**1.1**

Annual PE2 for the Digester System Backup Plant Flare (S-7831-1-0) After Commissioning of the Sulfur Removal System							
Pollutant	Emission Factor (lb/scf)	x	Maximum Gas Flared Annually (MMscf/yr)	x	10^6 scf/MMscf	=	PE2 (lb/yr)
NO_X	0.000036	x	13.14	x	10^6	=	**473**
SO_X	0.0000338	x	13.14	x	10^6	=	**444**
PM_{10}	0.0000048	x	13.14	x	10^6	=	**63**
CO	0.000222	x	13.14	x	10^6	=	**2,917**
VOC	0.00000306	x	13.14	x	10^6	=	**40**

PE2 for 675 bhp Digester Gas-Fired Lean Burn IC Engines (S-7831-1-0 & -2-0)

Daily SO_X Emissions from the Engines during and after Commissioning of the Experimental Sulfur Removal System:

During commissioning of the sulfur removal system, the sulfur content of the digester gas combusted in the engines will be limited to 4,000 ppmv (6.75×10^{-4} lb-SO_X/scf) for the first 30 days of commissioning, limited to 2,500 ppmv (4.22×10^{-4} lb-SO_X/scf) for the next 15 days of commissioning, and limited to 1,000 ppmv (1.69×10^{-4} lb-SO_X/scf) for any remaining days of commissioning. To operate more than one unit at once the sulfur content of the digester gas must be ≤ 1,000 ppmv, must be ≤ 200 ppmv during testing and optimization of the experimental sulfur removal system, and must achieve a final limit of ≤ 50 ppmv. Although the final Sulfur content limit will be 50 ppmv, daily and annual SO_X emissions after commissioning of the sulfur removal system will be calculated based on 200 ppmv to ensure that emissions during the first year are not underestimated.

Maximum daily emissions for each of the proposed engines during these periods are calculated in the table below:

Daily PE2 for SO_X from the 675 bhp Digester Gas-Fired IC Engines (S-7831-2-0 & -3-0)									
Period	Emissions Factors (g/bhp-hr)	x	Max Rating (bhp)	x	Daily Hours of Operation (hrs/day)	÷	Conversion (g/lb)	=	PE2 (lb/day)
First 30 days of Commissioning (4,000 ppmv)	3.94	x	675	x	24	÷	453.59	=	**140.7**
Next 15 days of Commissioning	2.46	x	675	x	24	÷	453.59	=	**87.9**
Final 15 days of Commissioning/ More than one unit allowed to operate (1,000 ppmv)	0.984	x	675	x	24	÷	453.59	=	**35.1**
Optimization of Sulfur Removal System (200 ppmv)	0.197	x	675	x	24	÷	453.59	=	**7.0**
Final Sulfur Content Limit (50 ppmv)	0.0492	x	675	x	24	÷	453.59	=	**1.8**

Annual SO_X Emissions from the Engines including Commissioning of the Sulfur Removal System:

Maximum annual SO_X emissions from each of the engines (including commissioning of the sulfur removal system) are calculated as follows:

30 days x 140.7 lb-SO_X/day + 15 days x 87.9 lb-SO_X/day + 15 days x 35.1 lb-SO_X/day + 305 days x 7.0 lb-SO_X/day = **8,201 lb-SO_X/yr**

Maximum Daily and Annual SO_X Emissions from the Engines after completing Commissioning of the Sulfur Removal System:

The maximum daily and annual emissions from each of the engines after commissioning of the sulfur removal system are calculated in the tables below. SO_X emissions are calculated based on 200 ppmv sulfur in the digester gas.

Daily PE2 for the Digester Gas-Fired Engines (S-7831-2-0 & -3-0) After Commissioning of the Sulfur Removal System								
NO_X	0.15	(g/hp·hr) x	675	(hp) x	24	(hr/day) ÷ 453.59 (g/lb) =	**5.4**	(lb/day)
NO_X Worst Case	0.60	(g/hp·hr) x	675	(hp) x	24	(hr/yr) ÷ 453.59 (g/lb) =	**21.4**	(lb/day)
SO_X	0.197	(g/hp·hr) x	675	(hp) x	24	(hr/yr) ÷ 453.59 (g/lb) =	**7.0**	(lb/day)
PM_{10}	0.07	(g/hp·hr) x	675	(hp) x	24	(hr/yr) ÷ 453.59 (g/lb) =	**2.5**	(lb/day)
CO	2.20	(g/hp·hr) x	675	(hp) x	24	(hr/yr) ÷ 453.59 (g/lb) =	**78.6**	(lb/day)
VOC	0.20	(g/hp·hr) x	675	(hp) x	24	(hr/yr) ÷ 453.59 (g/lb) =	**7.1**	(lb/day)

Annual PE2 for the Digester Gas-Fired Engines (S-7831-2-0 & -3-0) After Commissioning of the Sulfur Removal System									
NO_X	0.15	(g/hp·hr) x	675	(hp) x	8,760	(hr/yr) ÷ 453.59 (g/lb) =	**1,955**	(lb/yr)
NO_X Worst Case	0.60	(g/hp·hr) x	675	(hp) x	8,760	(hr/yr) ÷ 453.59 (g/lb) =	**7,822**	(lb/yr)
SO_X	0.197	(g/hp·hr) x	675	(hp) x	8,760	(hr/yr) ÷ 453.59 (g/lb) =	**2,568**	(lb/yr)
PM_{10}	0.07	(g/hp·hr) x	675	(hp) x	8,760	(hr/yr) ÷ 453.59 (g/lb) =	**913**	(lb/yr)
CO	2.20	(g/hp·hr) x	675	(hp) x	8,760	(hr/yr) ÷ 453.59 (g/lb) =	**28,679**	(lb/yr)
VOC	0.20	(g/hp·hr) x	675	(hp) x	8,760	(hr/yr) ÷ 453.59 (g/lb) =	**2,607**	(lb/yr)

Maximum Total Combined Annual SO_X Emissions from the Flare and Engines including Commissioning of the Sulfur Removal System:

The maximum total combined annual SO_X emissions from the proposed flare and IC engines are calculated using the following assumptions: 1) only one of the IC engines is used continuously during the first 30 days of the commissioning period, 2) only the flare is used continuously during the next 15 days of the commissioning period, 3) the flare and both engines are used continuously during the final 15 days of the commissioning period, 4) after the commissioning period the flare will continue to combust gas until reaching its permitted limit for gas combustion, 5) after the commissioning period both engines will operate continuously for the remainder of the year.

The maximum SO_X emissions from the flare and the engines are calculated using the assumptions given and adding emissions from the flare and engines together. Maximum annual SO_X emissions from the flare and engine are calculated as follows:

Flare

Assuming that the flare operates continuously during the final 30 days of the 60-day commissioning period, the amount of digester gas that could be combusted after commissioning is calculated as follows:

13.14×10^6 scf – (15 day x 140.7 lb-SO_X/day ÷ (4.22×10^{-4} lb-SO_X/scf)) – (15 day x 24 hr/day x 15,000 scf/hr) = 2,738,815 scf

The SO_X emissions from the flare are calculated as follows:

15 day x 140.7 lb-SO_X/day + 15 day x 60.8 lb-SO_X/day + 2,738,815 x 3.38×10^{-5} lb-SO_X/scf = 3,115 lb-SO_X/yr

Engines

Assuming that one of the engines operates continuously during the first 30 days of the 60-day commissioning period and that both of the engines operate the final 15 days of the commissioning period and during the remainder of the year, the SO_X emissions from the engines are calculated as follows:

30 days x 140.7 lb-SO_X/day + 2 x 15 days x 35.1 lb-SO_X/day + 2 x 305 days x 7.0 lb-SO_X/day = 9,544 lb-SO_X/yr

Maximum SO_X emissions from the engines and flare including commissioning

3,115 lb-SO_X/yr + 9,544 lb-SO_X/yr = **12,659 lb-SO_X/yr**

3. Pre-Project Stationary Source Potential to Emit (SSPE1)

Pursuant to Section 4.9 of District Rule 2201, the Pre-Project Stationary Source Potential to Emit (SSPE1) is the Potential to Emit (PE) from all units with valid Authorities to Construct (ATC) or Permits to Operate (PTO) at the Stationary Source and the quantity of emission reduction credits (ERC) which have been banked since September 19, 1991 for Actual Emissions Reductions that have occurred at the source, and which have not been used on-site.

Pre-Project Stationary Source Potential to Emit [SSPE1] (lb/year)						
	NO_X	SO_X	PM_{10}	CO	VOC	NH_3
S-5834-1-1 (Milk Parlor)	0	0	0	0	1,709	2,880
S-5834-2-1 (Cow Housing)	0	0	24,337	0	41,440	101,609
ATC S-5834-3-1 (Liquid Manure Handling)	0	0	0	0	23,749	150,042
S-5834-4-1 (Solid Manure Handling)	0	0	0	0	0	0
S-5834-5-0 (Feed Storage & Handling)	0	0	0	0	0	0
S-5834-9-0 (375 hp Emergency IC Engine)	827	0	39	251	94	0
Pre-Project SSPE (SSPE1)	**827**	**0**	**24,376**	**251**	**66,992**	**254,531**

4. Post Project Stationary Source Potential to Emit (SSPE2)

Pursuant to Section 4.10 of District Rule 2201, the Post Project Stationary Source Potential to Emit (SSPE2) is the Potential to Emit (PE) from all units with valid Authorities to Construct (ATC) or Permits to Operate (PTO) at the Stationary Source and the quantity of emission reduction credits (ERC) which have been banked since September 19, 1991 for Actual Emissions Reductions that have occurred at the source, and which have not been used on-site.

Post-Project Stationary Source Potential to Emit [SSPE2] (lb/year)						
	NO_X	SO_X	PM_{10}	CO	VOC	NH_3
S-5834-1-1 (Milk Parlor)	0	0	0	0	1,709	2,880
S-5834-2-1 (Cow Housing)	0	0	24,337	0	41,440	101,609
ATC S-5834-3-1 (Liquid Manure Handling)	0	0	0	0	9,501	150,042
S-5834-4-1 (Solid Manure Handling)	0	0	0	0	0	0
S-5834-5-0 (Feed Storage & Handling)	0	0	0	0	0	0
S-5834-9-0 (375 bhp Emergency IC Engine)	827	0	39	251	94	0
ATC S-7831-1-0 (Plug Flow Anaerobic Digester with 9.0 MMBtu/hr Backup Flare)*	473	3,115	63	2,917	40	0

Post-Project Stationary Source Potential to Emit [SSPE2] (lb/year)						
	NO_X	SO_X	PM_{10}	CO	VOC	NH_3
ATC S-7831-2-0 (675 bhp Digester Gas-Fired Engine)*	7,822	4,772	913	28,679	2,607	0
ATC S-7831-3-0 (675 bhp Digester Gas-Fired Engine)*	7,822	4,772	913	28,679	2,607	0
Post-Project SSPE (SSPE2)	**16,944**	**12,659**	**26,265**	**60,526**	**57,998**	**254,531**

*Annual SO_X emissions from these units are based on the maximum annual SO_X emissions from the units calculated above.

5. Major Source Determination

Pursuant to Section 3.24 of District Rule 2201, a major source is a stationary source with post-project emissions or a Post Project Stationary Source Potential to Emit (SSPE2), equal to or exceeding one or more of the threshold values.

In determining whether a facility is a major source, fugitive emissions are not counted unless the facility belongs to certain specified source categories. 40 CFR 71.2 (Definitions, Major Source (2)) states the following:

(2) A major stationary source of air pollutants or any group of stationary sources as defined in section 302 of the Act, that directly emits, or has the potential to emit, 100 tpy or more of any air pollutant (including any major source of fugitive emissions of any such pollutant, as determined by rule by the Administrator). <u>The fugitive emissions of a stationary source shall not be considered in determining whether it is a major stationary source</u> for the purposes of section 302(j) of the Act, unless the source belongs to one of the following categories of stationary source: (i) Coal cleaning plants (with thermal dryers); (ii) Kraft pulp mills; (iii) Portland cement plants; (iv) Primary zinc smelters; (v) Iron and steel mills; (vi) Primary aluminum ore reduction plants; (vii) Primary copper smelters; (viii) Municipal incinerators capable of charging more than 250 tons of refuse per day; (ix) Hydrofluoric, sulfuric, or nitric acid plants; (x) Petroleum refineries; (xi) Lime plants; (xii) Phosphate rock processing plants; (xiii) Coke oven batteries; (xiv) Sulfur recovery plants; (xv) Carbon black plants (furnace process); (xvi) Primary lead smelters; (xvii) Fuel conversion plants; (xviii) Sintering plants; (xix) Secondary metal production plants; (xx) Chemical process plants; (xxi) Fossil-fuel boilers (or combination thereof) totaling more than 250 million British thermal units per hour heat input; (xxii) Petroleum storage and transfer units with a total storage capacity exceeding 300,000 barrels; (xxiii) Taconite ore processing plants; (xxiv) Glass fiber processing plants; (xxv) Charcoal production plants; (xxvi) Fossil-fuel-fired steam electric plants of more than 250 million British thermal units per hour heat input; or (xxvii) Any other stationary source category which, as of August 7, 1980, is being regulated under section 111 or 112 of the Act.

Because agricultural operations do not fall under any of the specific source categories listed above, fugitive emissions are not counted when determining if an agricultural operation is a major source. 40 CFR 71.2 defines fugitive emissions as "those emissions which could not reasonably pass through a stack, chimney, vent, or other functionally-equivalent opening."

Since emissions at the dairy are not actually collected, a determination of whether emissions could be reasonably collected must be made by the permitting authority. The California Air Pollution Control Association (CAPCOA) prepared guidance in 2005 for estimating potential to emit of Volatile Organic Compounds from dairy farms. The guidance states that *"VOC emissions from the milking centers, cow housing areas, corrals, common manure storage areas, and land application of manure are not physically contained and could not reasonably pass through a stack, chimney, vent, or other functionally-equivalent opening. No collection technologies currently exist for VOC emissions from these emissions units. Therefore, the VOC emissions from these sources are considered fugitive."* The guidance also concludes that, because VOC collection technologies do exist for liquid waste systems at dairies, *"... the VOC emissions from waste lagoons and storage ponds are considered non-fugitive."* The District has researched this issue and concurs with the CAPCOA assessment, as discussed in more detail below.

Milking Center

The mechanical system for the milking parlors can be utilized to capture the gases emitted from the milking parlors, however in order to capture all of the gases, and to keep an appropriate negative pressure throughout the system, the holding area would also need to be entirely enclosed. No facility currently encloses the holding area since cows are continuously going in and out of the barn throughout the day. The capital required to enclose this large area would also be significant. Since the holding area is primarily kept open, the District cannot reasonably demonstrate that emissions can pass through a stack, chimney, vent, or other functionally equivalent opening.

Cow Housing

Although there are smaller dairy farms that have enclosed freestall barns, these barns are not fully enclosed and none of the barns have been found to vent the exhaust through a collection device. The airflow requirements through dairy barns are extremely high, primarily for herd health purposes. The airflow requirements will be even higher in the San Joaquin valley, where temperatures reach in excess of 110 degrees in the hot summer. Collection and control of the exhaust including the large amounts of airflow have not yet been achieved by any facility. Due to this difficultly, the District cannot reasonably demonstrate that emissions can pass through a stack, chimney, vent, or other functionally equivalent opening.

Manure Storage Areas

Many dairies have been found to cover dry manure piles. Covering dry manure piles is also a mitigation measure included in District Rule 4570. However, the District was not able to find any facility, which currently captures the emissions from the storage or handling of manure piles. Although many of these piles are covered, the emissions cannot easily be captured. Therefore, the District cannot reasonably demonstrate that these emissions can pass through a stack, chimney, vent, or other functionally equivalent opening. In addition, emissions from manure piles have been shown to be insignificant from recent studies.

Land Application

Emissions generated from the application of manure on land cannot reasonably be captured due to the extremely large areas, in some cases thousands of acres, of

cropland at dairies. Therefore, the District cannot reasonably demonstrate that these emissions can pass through a stack, chimney, vent, or other functionally equivalent opening.

Feed Handling and Storage

The majority of dairies store their silage piles underneath a tarp. Usually, the majority of the pile is covered except for the face of the pile. The face of the pile is kept open due to the continual need to extract the silage for feed purposes. The silage pile is disturbed 2-3 times per day. Because of the ongoing disturbance to these piles, it makes it extremely difficult to design a system to capture the emissions from these piles. Additionally, anaerobic conditions must be maintained to preserve the nutritive value of silage. An emissions collection system would require continuous air flow across the silage pile, which would cause the silage to lose its nutritive value. Therefore, the District cannot demonstrate that these emissions can be reasonably expected to pass through a stack, chimney, vent, or other functionally equivalent opening.

Therefore, the VOC emissions from the sources discussed above are considered fugitive. The District has determined that control technology to capture emissions from lagoons (biogas collection systems, for instance) is in use and these emissions can be reasonably collected and are not fugitive. Therefore, only emissions from dairy that will be used to determine if this facility is a major source are emissions from the lagoon(s)/storage pond(s) and IC engine.

The post-project emissions from the lagoons/storage ponds at the dairy were calculated in Section VII.C.2 above. The following table shows the non-fugitive Post-Project Stationary Source Potential to Emit for the dairy.

Non-Fugitive Post-Project Stationary Source Potential to Emit [SSPE2] (lb/year)					
	NO_X	SO_X	PM_{10}	CO	VOC
S-5834-1-1 (Milk Parlor)	0	0	0	0	0
S-5834-2-1 (Cow Housing)	0	0	0	0	0
ATC S-5834-3-1 (Liquid Manure Handling)	0	0	0	0	3,409
S-5834-4-1 (Solid Manure Handling)	0	0	0	0	0
S-5834-5-0 (Feed Storage & Handling)	0	0	0	0	0
S-5834-9-0 (375 bhp Emergency IC Engine)	827	0	39	251	94
ATC S-7831-1-0 (Plug Flow Anaerobic Digester with 9.0 MMBtu/hr Backup Flare)	473	3,115	63	2,917	40
ATC S-7831-2-0 (675 bhp Digester Gas-Fired Engine)	7,822	4,772	913	28,679	2,607
ATC S-7831-3-0 (675 bhp Digester Gas-Fired Engine)	7,822	4,772	913	28,679	2,607
Non Fugitive SSPE	**16,944**	**12,659**	**1,928**	**60,526**	**8,757**

Major Source Determination (lb/year)					
	NO_X	SO_X	PM_{10}	CO	VOC
Total Post Project SSPE (SSPE2)	16,944	12,659	1,928	60,526	8,757
Major Source Threshold	20,000	140,000	140,000	200,000	20,000
Major Source?	No	No	No	No	No

As seen in the table above, the facility is not an existing Major Source and also is not becoming a Major Source as a result of this project.

6. Baseline Emissions (BE)

The BE calculation (in lbs/year) is performed pollutant-by-pollutant for each unit within the project, to calculate the QNEC and if applicable, to determine the amount of offsets required.

Pursuant to Section 3.7 of District Rule 2201, BE = Pre-project Potential to Emit for:

- Any unit located at a non-Major Source,
- Any Highly-Utilized Emissions Unit, located at a Major Source,
- Any Fully-Offset Emissions Unit, located at a Major Source, or
- Any Clean Emissions Unit, located at a Major Source.

otherwise,

BE = Historic Actual Emissions (HAE), calculated pursuant to Section 3.22 of District Rule 2201.

Dairy Permits
The BE calculation (in lb/year) is performed on a pollutant-by-pollutant basis to determine the amount of offsets required, where necessary. However, agricultural operations are exempt from offsets pursuant to Section 4.6.9 of District Rule 2201. Therefore, BE calculations are not required for the dairy permits.

Digester with Flare (S-7831-1) & IC Engines (S-7831-2 & -3)
Since these are new emissions units, BE = PE1 = 0 for all pollutants from each unit.

7. SB 288 Major Modification

An SB 288 Major Modification is modification as defined in 40 CFR Part 51.165, as in effect on December 19, 2002. 40 CFR Part 51.165 defines a major modification "*any physical change in or change in the method of operation of a major stationary source that would result in a significant net emissions increase of any pollutant subject to regulation under the Act.*"

As discussed in Section VII.C.5 above, the facility is not a Major Source for any pollutant; therefore, the project does not constitute an SB 288 Major Modification.

8. Federal Major Modification

A Federal Major Modification is a "Major Modification" as defined in 40 CFR 51.165 and part D of Title I of the Clean Air Act. 40 CFR Part 51.165 defines a major modification "any physical change in or change in the method of operation of a major stationary source that would result in: *"(1) A significant emissions increase of a regulated NSR pollutant; and (2) A significant net emissions increase of that pollutant from the major stationary source."*

As discussed in Section VII.C.5 above, the facility is not a Major Source for any pollutant; therefore, the project does not constitute a Federal Major Modification and no further discussion is required.

9. Quarterly Net Emissions Change (QNEC)

The QNEC is calculated solely to establish emissions that are used to complete the District's PAS emissions profile screen. If required, detailed QNEC calculations will be included in the project file.

VIII. Compliance

Rule 1070 Inspections

This rule applies to any source operation, which emits or may emit air contaminants.

This rule allows the District to perform inspections for the purpose of obtaining information necessary to determine whether air pollution sources are in compliance with applicable rules and regulations. The rule also allows the District to require record keeping, to make inspections and to conduct tests of air pollution sources. Therefore, the following conditions will be listed on the dairy permits to ensure compliance:

> {3215} Upon presentation of appropriate credentials, a permittee shall allow an authorized representative of the District to enter the permittee's premises where a permitted source is located or emissions related activity is conducted, or where records must be kept under condition of the permit. [District Rule 1070]
>
> {3216} Upon presentation of appropriate credentials, a permittee shall allow an authorized representative of the District to have access to and copy, at reasonable times, any records that must be kept under the conditions of the permit. [District Rule 1070]

Rule 2010 Permits Required

The provisions of this rule apply to any person who plans to or does operate, construct, alter, or replace any source operation, which may emit air contaminants or may reduce the emission of air contaminants.

Pursuant to Section 4.0, a written permit shall be obtained from the APCO. No Permit to Operate shall be granted either by the APCO or the Hearing Board for any source operation described in Section 3.0, constructed or installed without authorization as required by Section

3.0 until the information required is presented to the APCO and such source operation is altered, if necessary, and made to conform to the standards set forth in Rule 2070 (Standards for Granting Applications) and elsewhere in District rules and regulations.

Rule 2201 New and Modified Stationary Source Review Rule

A. Best Available Control Technology (BACT)

1. BACT Applicability

BACT requirements are triggered on a pollutant-by-pollutant basis and on an emissions unit-by-emissions unit basis for the following*:

a. Any new emissions unit with a potential to emit exceeding two pounds per day,
b. The relocation from one Stationary Source to another of an existing emissions unit with a potential to emit exceeding two pounds per day,
c. Modifications to an existing emissions unit with a valid Permit to Operate resulting in an AIPE exceeding two pounds per day, and/or
d. Any new or modified emissions unit, in a stationary source project, which results in an SB 288 Major Modification or a Federal Major Modification

*Except for CO emissions from a new or modified emissions unit at a Stationary Source with an SSPE2 of less than 200,000 pounds per year of CO.

a. New emissions units – PE > 2 lb/day

<u>Anaerobic Digester System and Backup Flare (S-7831-1-0)</u>

As discussed in Section I of this evaluation, the applicant is proposing to install a new anaerobic digester system with a 9.0 MMBtu/hr backup flare.

The PE for Unit S-7831-1-0 exceeds 2.0 lb/day for NO_X and SO_X. Therefore, BACT is triggered for NO_X and SO_X from this unit. The PE for CO from the unit also exceeds 2.0 lb/day; however, BACT is not triggered for CO since the SSPE2 for CO is not greater than 200,000 lbs/year, as shown in Section VII.C.5 of this document.

<u>675 bhp Digester Gas-Fired Lean Burn IC Engines (S-7831-2-0 & -3-0)</u>

As discussed in Section I of this evaluation, the applicant is proposing to install two 675 bhp lean burn IC engines with hydrogen/syngas injection.

The PE for the engines exceeds 2.0 lb/day for NO_X, SO_X, PM_{10}, and VOC. Therefore, BACT is triggered for NO_X, SO_X, and VOC from this unit. The PE for CO from the unit also exceeds 2.0 lb/day; however, BACT is not triggered for CO since the SSPE2 for CO is not greater than 200,000 lbs/year, as shown in Section VII.C.5 of this document.

b. Relocation of emissions units – PE > 2 lb/day

As discussed in Section I above, there are no emissions units being relocated from one stationary source to another; therefore BACT is not triggered relocation of an emissions unit.

c. Modification of emissions units – AIPE > 2 lb/day

AIPE = PE2 – HAPE

Where,
AIPE = Adjusted Increase in Permitted Emissions, (lb/day)
PE2 = Post-Project Potential to Emit, (lb/day)
HAPE = Historically Adjusted Potential to Emit, (lb/day)

HAPE = PE1 x (EF2/EF1)

Where,
PE1 = The emissions unit's Potential to Emit prior to modification or relocation, (lb/day)
EF2 = The emissions unit's permitted emission factor for the pollutant after modification or relocation. If EF2 is greater than EF1 then EF2/EF1 shall be set to 1
EF1 = The emissions unit's permitted emission factor for the pollutant before the modification or relocation

AIPE = PE2 – (PE1 * (EF2 / EF1))

As discussed in Section I above, the proposed project involves modifying the existing liquid manure handling system to allow some of the manure that is currently flushed to the lagoon system to be diverted to the proposed digester system.

HAPE for the liquid manure handling system will be calculated based on the pre-project annual emissions and the pre-project emission factors for each type of cow, which were taken from the tables in Section VII.C.1 above, and the post-project emission factors and control efficiencies that were used in the tables in Section VII.C.2 above to calculate the post project emissions (PE2) from the units.

<u>Liquid Manure Handling System (ATC S-5834-3-2: Lagoons/Storage Ponds and Liquid Manure Land Application):</u>

<u>AIPE for Lagoons/Storage Ponds</u>

<u>VOC</u>
PE2 = 9.3 lb-VOC/day (calculated in Section VII.C.2 above)

HAPE for VOC from Lagoon/Storage Pond (Permit S-5834-3)									
Type of Cow	**PE_1 (lb/yr)**	**x**	**(EF_2)**		**÷**	**(EF_1)**		**=**	**HAPE (lb/yr)**
Milk Cow (Freestall Barn)	6,156	x	(2.7 x 0.95 x 0.40) =	1.03	÷	(2.7 x 0.95) =	2.57	=	2,467
Dry Cow (Corral w flush)	432	x	(1.4 x 0.95 x 0.40) =	0.53	÷	(1.4 x 0.95) =	1.33	=	172
Heifer (15-24 mo) (Corral w flush)	760	x	(1.0 x 0.95 x 0.40) =	0.38	÷	(1.0 x 0.95) =	0.95	=	304
Heifer (7-14 mo) (Corral w flush)	684	x	(0.9 x 0.95 x 0.40) =	0.34	÷	(0.9 x 0.95) =	0.86	=	270
Heifer (3-6 mo) (Corral w flush)	152	x	(0.8 x 0.95 x 0.40) =	0.30	÷	(0.8 x 0.95) =	0.76	=	60
Calf (0-3 month) (Calf hutches)	299	x	(0.9 x 0.95 x 0.40) =	0.34	÷	(0.9 x 0.95) =	0.86	=	118
Bull (Corral w flush)	37	x	(1.3 x 0.95 x 0.40) =	0.49	÷	(1.3 x 0.95) =	1.24	=	15
HAPE for VOC from Lagoon/Pond (S-5834-3)			**Total lb/yr**						**3,406**
			lb/day = total lb/yr ÷ (365 day/yr)						**9.3**

AIPE = 9.3 lb-VOC/day – 9.3 lb-VOC/day
= 0.0 lb-VOC/day

<u>NH_3</u>
PE2 = 147.5 lb-NH_3/day (calculated in Section VII.C.2 above)

HAPE for NH_3 from Lagoon/Storage Pond (Permit S-5834-3)							
Type of Cow	**PE_1 (lb/yr)**	**x**	**(EF_2)**	**÷**	**(EF_1)**	**=**	**HAPE (lb/yr)**
Milk Cow (Freestall Barn)	37,680	x	15.7	÷	15.7	=	37,680
Dry Cow (Corral w flush)	3,088	x	9.5	÷	9.5	=	3,088
Heifer (15-24 mo) (Corral w flush)	5,360	x	6.7	÷	6.7	=	5,360
Heifer (7-14 mo) (Corral w flush)	4,640	x	5.8	÷	5.8	=	4,640
Heifer (3-6 mo) (Corral w flush)	1,060	x	5.3	÷	5.3	=	1,060
Calf (0-3 month) (Calf hutches)	1,750	x	5.0	÷	5.0	=	1,750
Bull (Corral w flush)	267	x	8.9	÷	8.9	=	267
HAPE for NH_3 from Lagoon/Pond (S-5834-3)			**Total lb/yr**				**53,845**
			lb/day = total lb/yr ÷ (365 day/yr)				**147.5**

AIPE = 147.5 lb-NH_3/day – 147.5 lb-NH_3/day
= 0.0 lb-NH_3/day

As demonstrated above, the AIPE is not greater than 2.0 lb/day for VOC or NH_3; therefore, BACT is not triggered for VOC or NH_3 from the lagoons/storage ponds.

AIPE for Liquid Manure Land Application

VOC
PE2 = 16.7 lb-VOC/day (calculated in Section VII.C.2 above)

HAPE for VOC from Liquid Manure Land Application (Permit S-5834-3)									
Type of Cow	**PE_1 (lb/yr)**	**x**	**(EF_2)**		**÷**	**(EF_1)**		**=**	**HAPE (lb/yr)**
Milk Cow (Freestall Barn)	11,400	x	(5.0 x 0.95 x 0.40) =	1.90	÷	(5.0 x 0.95) =	4.75	=	4,560
Dry Cow (Corral w flush)	710	x	(2.3 x 0.95 x 0.40) =	0.87	÷	(2.3 x 0.95) =	2.19	=	282
Heifer (15-24 mo) (Corral w flush)	1,216	x	(1.6 x 0.95 x 0.40) =	0.61	÷	(1.6 x 0.95) =	1.52	=	488
Heifer (7-14 mo) (Corral w flush)	1,064	x	(1.4 x 0.95 x 0.40) =	0.53	÷	(1.4 x 0.95) =	1.33	=	424
Heifer (3-6 mo) (Corral w flush)	247	x	(1.3 x 0.95 x 0.40) =	0.49	÷	(1.3 x 0.95) =	1.24	=	98
Calf (0-3 month) (Calf hutches)	532	x	(1.6 x 0.95 x 0.40) =	0.61	÷	(1.6 x 0.95) =	1.52	=	214
Bull (Corral w flush)	60	x	(2.1 x 0.95 x 0.40) =	0.80	÷	(2.1 x 0.95) =	2.00	=	24
HAPE for VOC from Liquid Manure Land App (S-5834-3)								**Total lb/yr**	**6,090**
								lb/day = total lb/yr ÷ (365 day/yr)	**16.7**

AIPE = 16.7 lb-VOC/day – 16.7 lb-VOC/day
= 0.0 lb-VOC/day

NH_3
PE2 = 263.6 lb-NH_3/day (calculated in Section VII.C.2 above)

HAPE for NH_3 from Lagoon/Storage Pond (Permit S-5834-3)							
Type of Cow	**PE_1 (lb/yr)**	**x**	**(EF_2)**	**÷**	**(EF_1)**	**=**	**HAPE (lb/yr)**
Milk Cow (Freestall Barn)	69,840	x	29.1	÷	29.1	=	69,840
Dry Cow (Corral w flush)	4,973	x	15.3	÷	15.3	=	4,973
Heifer (15-24 mo) (Corral w flush)	8,560	x	10.7	÷	10.7	=	8,560
Heifer (7-14 mo) (Corral w flush)	7,440	x	9.3	÷	9.3	=	7,440
Heifer (3-6 mo) (Corral w flush)	1,700	x	8.5	÷	8.5	=	1,700
Calf (0-3 month) (Calf hutches)	3,255	x	9.3	÷	9.3	=	3,255
Bull (Corral w flush)	429	x	14.3	÷	14.3	=	429
HAPE for NH_3 from Lagoon/Pond (S-5834-3)					**Total lb/yr**		**96,197**
					lb/day = total lb/yr ÷ (365 day/yr)		**263.6**

AIPE = 263.6 lb-NH_3/day – 263.6 lb-NH_3/day
= 0.0 lb-NH_3/day

As demonstrated above, the AIPE is not greater than 2.0 lb/day for VOC or NH_3; therefore, BACT is not triggered for VOC or NH_3 from liquid manure land application.

d. Major Modification

As discussed in Section VII.C.7 above, this project does not constitute an SB 288 Major Modification or a Federal Major Modification; therefore BACT is not triggered for SB 288 Major Modification or Federal Major Modification purposes.

2. BACT Guideline

Proposed Plug Flow Digester System with Backup Flare (S-7831-1-0)

BACT Guideline 1.4.4 [Digester Gas-Fired Flares] (4th qtr 2010) applies to the Digester Gas-fired flare (See Appendix D). This BACT Guideline will be updated under the BACT analysis for this project based on information demonstrating that reducing the sulfur content of the digester gas is currently Achieved in Practice BACT for SO_X.

Proposed Digester Gas-Fired IC Engines (S-7831-2-0 & -3-0)

There is currently no BACT Guideline that applies to IC engines fired on dairy digester gas. The most similar BACT Guideline that was contained in the District's BACT Clearinghouse was BACT Guideline 3.3.13 [Waste Gas-Fired IC Engine], which applied to biogas-fired IC engines at wastewater treatment plants and landfills; however, this BACT guideline was rescinded prior to the application for this project being deemed complete; therefore, a new BACT analysis is required. The Top-Down BACT Analysis for the proposed units can be found in Appendix E of this application evaluation.

3. Top-Down BACT Analysis

Per Permit Services Policies and Procedures for BACT, a Top-Down BACT analysis shall be performed as a part of the application review for each application subject to the BACT requirements pursuant to the District's NSR Rule (District Rule 2201). The following BACT requirements resulted from the Top-Down BACT analyses performed for this project:

Plug Flow Digester System with Backup Flare (S-7831-1-0)

Pursuant to the attached Top-Down BACT Analysis (see Appendix D), BACT for the Digester Gas-fired flare must be satisfied with the following:

NO_X: Enclosed flare and NO_X emissions ≤ 0.06 lb/MMBtu (Achieved in Practice)

SO_X: Sulfur Content not exceeding 50 ppmv H_2S (Achieved in Practice) or 99% Sulfur Removal (Technologically Feasible)

The applicant has proposed a flare with NO_X emissions ≤ 0.06 lb/MMBtu. The applicant is also proposing to reduce the sulfur content of the digester gas combusted in the flare to 50 ppmv or less using an experimental sulfur removal system or alternative scrubber approved by the District. Therefore, the BACT requirements will be satisfied.

Digester Gas-Fired IC Engines (S-7831-2-0 & -3-0)

Pursuant to the attached Top-Down BACT Analysis (see Appendix E), BACT for the proposed Digester Gas-fired Engines is satisfied with the following:

NO_X:
1) NO_X emissions no greater than 0.6 g/bhp-hr (Achieved in Practice) &
2) Applying controls to reduce NO_X emissions to ≤ 0.15 g/bhp-hr (9-11 ppmv @ 15% O_2) (Technologically Feasible – catalysts for engines or equivalent)

SO_X: Sulfur Content not exceeding 50 ppmv (Achieved in Practice)

PM_{10}: Sulfur Content not exceeding 50 ppmv (Achieved in Practice)

VOC: VOC Emissions not exceeding 0.20 g/bhp-hr (Achieved in Practice)

The applicant has proposed digester gas-fired lean burn IC engines with NO_X emissions no greater than 0.60 g/bhp-hr and has proposed to utilize hydrogen/syngas injection on the engines to attempt to reduce NO_X emissions to no greater than 0.15 g/bhp-hr. The applicant has also proposed VOC emissions from the engines of 0.20 g/bhp/hr and to use an experimental sulfur removal system or alternative scrubber approved by the District to reduce the sulfur content of the digester gas to 50 ppmv or less. Therefore, the BACT requirements will be satisfied.

B. Offsets

1. Offset Applicability

Pursuant to Section 4.5.3, offset requirements shall be triggered on a pollutant by pollutant basis and shall be required if the Post Project Stationary Source Potential to Emit (SSPE2) equals to or exceeds the offset threshold levels in Table 4-1 of Rule 2201.

Dairy Permits
Pursuant to Section 4.6.9 of District Rule 2201, agricultural sources, to the extent provided by California Health and Safety Code, section 42301.18(c) are exempt from offsets as long as nothing in this Health and Safety Code section circumvents the requirements of Section 42301.16(a).

Digester and Backup Flare and Digester Gas-Fired IC Engines
The proposed flare and digester gas-fired IC engines will be located at the dairy but will not be operated by the dairy. The digester, flare, and IC engines will be operated as a separate facility (at the same stationary source) by a separate company that specializes in generation of energy from biogas; therefore, the District has determined that the flare and IC engines are non-agricultural units.

The following table compares the post-project annual emissions from the non-agricultural units at the facility in order to determine if offsets will be required for this project.

Offset Determination (lb/year)					
	NO_X	SO_X	PM_{10}	CO	VOC
Post Project SSPE (SSPE2)	16,117	12,659	1,889	60,275	5,254
Offset Threshold	20,000	54,750	29,200	200,000	20,000
Offsets triggered?	**No**	**No**	**No**	**No**	**No**

2. Quantity of Offsets Required

As seen above, the SSPE2 for the non-agricultural units at the stationary source is not greater than the offset thresholds for any pollutant; therefore offset calculations are not necessary and offsets will not be required for this project.

C. Public Notification

1. Applicability

Public noticing is required for:
a. Any new Major Source, which is a new facility that is also a Major Source,
b. Major Modifications,
c. Any new emissions unit with a Potential to Emit greater than 100 pounds during any one day for any one pollutant,
d. Any project which results in the offset thresholds being surpassed, and/or

e. Any project with an SSIPE of greater than 20,000 lb/year for any pollutant.

a. New Major Source

New Major Sources are new facilities, which are also Major Sources. As shown in Section VII.C.5 above, the SSPE2 is not greater than the Major Source threshold for any pollutant. Therefore, public noticing is not required for this project for new Major Source purposes.

b. Major Modification

As demonstrated in VII.C.7, this project does not constitute an SB 288 Major Modification or a Federal Major Modification; therefore, public noticing for Major Modification purposes is not required.

c. PE > 100 lb/day

Applications which include a new emissions unit with a Potential to Emit greater than 100 pounds during any one day for any pollutant will trigger public noticing requirements.

The applicant has proposed to install a new plug flow anaerobic digester with a digester gas-fired backup flare (S-7831-1-0) and two new 675 bhp digester gas-fired Lean Burn IC Engines (S-7831-2-0 & -3-0). The PE2 for the proposed identical new units is compared to the daily PE Public Notice thresholds in the following tables:

PE > 100 lb/day Public Notice Thresholds (S-7831-1-0: Plug Flow Digester & Backup Flare)			
Pollutant	PE2 (lb/day)	Public Notice Threshold	Public Notice Triggered?
NO_X	13.0	100 lb/day	No
SO_X	140.7	100 lb/day	**Yes**
PM_{10}	1.7	100 lb/day	No
CO	79.9	100 lb/day	No
VOC	1.1	100 lb/day	No

PE > 100 lb/day Public Notice Thresholds (S-7831-2-0 & -3-0: Digester Gas-Fired IC Engines)			
Pollutant	PE2 (lb/day)	Public Notice Threshold	Public Notice Triggered?
NO_X	21.4	100 lb/day	No
SO_X	140.7	100 lb/day	**Yes**
PM_{10}	2.5	100 lb/day	No
CO	78.6	100 lb/day	No
VOC	7.1	100 lb/day	No

Therefore, public noticing for PE > 100 lb/day purposes is required.

d. Offset Threshold

The following table compares the SSPE1 with the SSPE2 in order to determine if any offset thresholds have been surpassed with this project.

Offset Threshold				
Pollutant	SSPE1 (lb/year)	SSPE2 (lb/year)	Offset Threshold	Public Notice Required?
NO_X	827	16,944	20,000 lb/year	No
SO_X	0	12,659	54,750 lb/year	No
PM_{10}	24,376	26,265	29,200 lb/year	No
CO	251	60,526	200,000 lb/year	No
VOC	66,992	57,998	20,000 lb/year	No

As detailed above, there were no offset thresholds surpassed with this project; therefore public noticing is not required for surpassing an offset threshold.

e. SSIPE > 20,000 lb/year

Public notification is required for any permitting action that results in a Stationary Source Increase in Permitted Emissions (SSIPE) of more than 20,000 lb/year of any affected pollutant. According to District policy, the SSIPE is calculated as the Post Project Stationary Source Potential to Emit (SSPE2) minus the Pre-Project Stationary Source Potential to Emit (SSPE1), i.e. SSIPE = SSPE2 – SSPE1. The values for SSPE2 and SSPE1 are calculated according to Rule 2201, Sections 4.9 and 4.10, respectively. The SSIPE is compared to the SSIPE Public Notice thresholds in the following table:

Stationary Source Increase in Permitted Emissions [SSIPE] – Public Notice					
Pollutant	SSPE2 (lb/year)	SSPE1 (lb/year)	SSIPE (lb/year)	SSIPE Public Notice Threshold	Public Notice Required?
NO_x	16,944	827	16,117	20,000 lb/year	No
SO_x	16,659	0	16,659	20,000 lb/year	No
PM_{10}	26,265	24,376	1,889	20,000 lb/year	No
CO	60,526	251	60,275	20,000 lb/year	**Yes**
VOC	57,998	66,992	-8,994	20,000 lb/year	No
NH_3	254,531	254,531	0	20,000 lb/year	No

As demonstrated above, the SSIPE for CO was greater than 20,000 lb/year; therefore public noticing for SSIPE > 20,000 lbs is required.

2. Public Notice Action

As discussed above, public noticing is required for this project for SO_X emissions in excess of 100 lb/day and for an SSIPE for CO that exceeds 20,000 lbs/yr. Therefore, public notice documents will be submitted to the California Air Resources Board (CARB)

and a public notice will be published in a local newspaper of general circulation prior to the issuance of the ATC for this equipment.

D. Daily Emission Limits (DELs)

Daily Emissions Limitations (DELs) and other enforceable conditions are required by Section 3.15 to restrict a unit's maximum daily emissions, to a level at or below the emissions associated with the maximum design capacity. Per Sections 3.15.1 and 3.15.2, the DEL must be contained in the latest ATC and contained in or enforced by the latest PTO and enforceable, in a practicable manner, on a daily basis. DELs are also required to enforce the applicability of BACT.

Proposed DEL Conditions for the Liquid Manure Handling System (S-5834-3-2):

For dairies, the DEL is satisfied based on the number and types of cows at the dairy and the required emission controls and mitigation measures. The number and types of cows are listed in the permit equipment description for the Cow Housing Permit.

Since emissions from the liquid manure handling system depend on the amount of manure handled and the control of the digester, the following conditions will be placed on the permit:

The liquid manure handling system shall handle flush manure from no more than 2,400 milk cows, 325 dry cows, 800 heifers (15-24 months), 800 heifers (7-14 months), 200 heifers (3-6 months), 350 calves (0-3 months), and 30 bulls. [District Rule 2201]

The liquid manure that is handled at this dairy shall be processed in an anaerobic digester that is approved by the District. [District Rule 2201]

Proposed DEL Conditions for Plug Flow Digester and Backup Flare (S-7831-1-0)

For these digester gas-fired flare, the DELs for NO_X, PM_{10}, CO, and VOC are stated in the form of maximum emission factors (lb/MMBtu) and maximum amount of gas that can be combusted (MMscf). The DEL for SO_X is based on the maximum sulfur content of the digester gas.

- No air contaminant shall be discharged into the atmosphere from the flare for a period or periods aggregating more than three minutes in any one hour which is as dark as, or darker than, Ringelmann 1/4 or 5% opacity. [District Rule 2201]
- The amount of digester combusted in the flare shall neither exceed 0.36 MMscf in any one day nor 13.14 MMscf in any consecutive 365-day period. [District Rule 2201]
- Emissions from the flare shall not exceed any of the following limits: 0.06 lb-NOx/MMBtu, 0.008 lb-PM10/MMBtu, 0.37 lb-CO/MMBtu, or 0.0051 lb-VOC/MMBtu. [District Rules 2201 and 4311]
- The sulfur content of the digester gas combusted in this flare shall not exceed 50 ppmv as H2S except as provided below. [District Rules 2201 and 4801]
- The applicant has requested to install an experimental sulfur removal system. A six-month test period will be allowed for the experimental sulfur removal system after

startup. The six-month test period shall begin with commencement of the commissioning period for the sulfur removal system and any time required for commissioning of the sulfur removal system shall be counted in the six-month test period. During the test period a digester gas sulfur content greater than 50 ppmv but not exceeding 200 ppmv will not constitute a violation of the permit provided that the sulfur removal system is operated to minimize the sulfur content to the maximum extent feasible. [District Rule 2201]

- If the sulfur content of the digester gas continues to exceed 50 ppmv as H2S by the end of the six-month test period for the experimental sulfur removal system, the permittee shall submit details to the District of an additional polishing scrubber or an alternative sulfur removal system to meet the required 50 ppmv limit within 30 days of the end of the test period. If the District determines that an ATC application is required for the equipment, the applicant shall submit an ATC application within 15 days of the District's determination and the applicant shall request expedited processing of the required ATC permit and shall pay any required fees for expedited processing. The equipment to meet the sulfur content limit shall be installed within 90 days of approval by the District or issuance of the ATC; if the permit units controlled by the sulfur removal system/scrubber are not operating the District may approve an extension of this period. [District Rule 2201]

Proposed DEL Conditions for the Flare during Commissioning of the Sulfur Removal System:

- Commissioning period for the sulfur removal system shall commence when the digester begins to produce a continuous flow of gas at a rate of least 1.0 cfm. The commissioning period shall terminate when the sulfur removal system has completed initial performance testing and reached steady operation with a digester gas sulfur concentration not exceeding 200 ppmv as H2S. The duration of the commissioning period shall not exceed 60 days. At the earliest feasible opportunity, the air injection rate of sulfur removal system shall be adjusted to minimize the sulfur content of the digester gas. [District Rule 2201]

- During commissioning of the sulfur removal system, the sulfur content of the digester gas combusted in this unit shall not exceed 4,000 ppmv during the first 30 days of commissioning, shall not exceed 2,500 ppmv during the next 15 days of commissioning, and shall not exceed 1,000 ppmv during any remaining days of the commissioning period. [District Rules 2201 and 4801]

- No more than one of permit units S-7831-1, -2, and -3 (digester gas-fired flare and IC engines) shall operate at any one time until the measured sulfur content of the digester gas is 1,000 ppmv or less for at least three consecutive days. [District Rule 2201]

- During commissioning of the sulfur removal system, SOx (as SO2) from this unit shall not exceed 140.7 lbs in any day. SOx emissions shall be calculated based on the average measured sulfur content of the gas (ppmv) and the total amount of gas (scf) combusted in the unit using the following equation: [average measured sulfur concentration (ppmv)] x [total gas combusted (scf)] x 1.688 x 10E-7. [District Rule 2201]

Proposed DEL Conditions for Digester Gas-fired Engines (S-7831-2-0 & -3-0)

For these digester gas-fired IC engines, the DELs for NO_X, PM_{10}, CO, and VOC are stated in the form of emission factors (g/hp-hr), the maximum engine horsepower rating (675 bhp), and the maximum operational time of 24 hours per day. The DEL for SO_X is based on the maximum sulfur content of the digester gas.

- The sulfur content of the digester gas used as fuel in this engine shall not exceed 50 ppmv as H2S except as provided below. [District Rules 2201 and 4801]
- The applicant has requested to install an experimental sulfur removal system. A six-month test period will be allowed for the experimental sulfur removal system after startup. The six-month test period shall begin with commencement of the commissioning period for the sulfur removal system and any time required for commissioning of the sulfur removal system shall be counted in the six-month test period. During the test period a digester gas sulfur content greater than 50 ppmv but not exceeding 200 ppmv will not constitute a violation of the permit provided that the sulfur removal system is operated to minimize the sulfur content to the maximum extent feasible. [District Rule 2201]
- If the sulfur content of the digester gas continues to exceed 50 ppmv as H2S by the end of the six-month test period for the experimental sulfur removal system, the permittee shall submit details to the District of an additional polishing scrubber or an alternative sulfur removal system to meet the required 50 ppmv limit within 30 days of the end of the test period. If the District determines that an ATC application is required for the equipment, the applicant shall submit an ATC application within 15 days of the District's determination and the applicant shall request expedited processing of the required ATC permit and shall pay any required fees for expedited processing. The equipment to meet the sulfur content limit shall be installed within 90 days of approval by the District or issuance of the ATC; if the permit units controlled by the sulfur removal system/scrubber are not operating the District may approve an extension of this period. [District Rule 2201]
- Emissions from this IC engine shall not exceed any of the following limits (except as provided in conditions 22-25 below): 0.15 g-NOx/bhp-hr (NOx referenced as NO2), 2.20 g-CO/bhp-hr, 0.20 g-VOC/bhp-hr (VOC referenced as methane), 0.07 g-PM10/bhp-hr. [District Rules 2201 and 4702]
- NOx emissions (as NO2) from the engine in excess of 0.15 g/bhp-hr but not exceeding 0.60 g/bhp-hr shall not constitute a violation of this permit provided that NOx emissions are limited to the lowest achievable emission rate to satisfy BACT. BACT for NOx from this engine shall consist of all other emission limitations and operational and design conditions contained in this permit. The final BACT level for NOx shall be determined to the satisfaction of the Air Pollution Control Officer in accordance with District Rule 2201 and the District's BACT policy, after at least 12 months of operating history and an official compliance source test. [District Rule 2201]
- The District shall establish the final BACT limit for NOx, including any applicable averaging periods, and revise the applicable limit contained in the permit within 60 days of the successful completion of the BACT determination period or receipt of the report from the permittee. Within 30 days of receipt of the District's determination, the

permittee shall submit an Authority to Construct application to incorporate the revised emissions limit(s). In no case shall the final BACT NOx emission limitation be higher than 0.60 g-NOx/bhp-hr. The engine shall be allowed to continue to operate after the BACT evaluation period has ended and before the new Authority to Construct permit has been issued provided that NOx (as NO2) emissions from the engine do not exceed either of the following limits: 1) 0.60 g-NOx/bhp-hr and 2) 65 ppmv NOx @ 15% O2. [District Rules 2201 and 4702]

- If the engine demonstrates reasonably reliable compliance with the 0.15 g/bhp-hr NOx emissions limit during the BACT evaluation period, this limit shall be deemed BACT for the installation. [District Rule 2201]

Proposed DEL Conditions for the Engines during Commissioning of the Sulfur Removal System:

- Commissioning period for the sulfur removal system shall commence when the digester begins to produce a continuous flow of gas at a rate of least 1.0 cfm. The commissioning period shall terminate when the sulfur removal system has completed initial performance testing and reached steady operation with a digester gas sulfur concentration not exceeding 200 ppmv as H2S. The duration of the commissioning period shall not exceed 60 days. At the earliest feasible opportunity, the air injection rate of sulfur removal system shall be adjusted to minimize the sulfur content of the digester gas. [District Rule 2201]
- During commissioning of the sulfur removal system, the sulfur content of the digester gas combusted in this unit shall not exceed 4,000 ppmv during the first 30 days of commissioning, shall not exceed 2,500 ppmv during the next 15 days of commissioning, and shall not exceed 1,000 ppmv during any remaining days of the commissioning period. [District Rules 2201 and 4801]
- No more than one of permit units S-7831-1, -2, and -3 (digester gas-fired flare and IC engines) shall operate at any one time until the measured sulfur content of the digester gas is 1,000 ppmv or less for at least three consecutive days. [District Rule 2201]

E. Compliance Assurance

1. Source Testing

Plug Flow Digester and Backup Flare (S-7831-1-0)

The proposed flare is subject to the source testing requirements of District Rule 4311, Flares. The following conditions will be placed on the permits to ensure compliance:

- Source testing to measure NOx and VOC emissions from the digester-fired flare shall be conducted within 120 days of initial start-up and at least once every twelve (12) months, thereafter. [District Rules 2201 and 4311]
- For source test purposes, NOx emissions from the flare shall be determined using EPA Method 19 on a heat input basis, or EPA Method 3A, EPA Method 7E, or ARB Method 100 on a ppmv basis. [District Rule 4311]
- For source test purposes, VOC emissions from the flare shall be determined using EPA Method 25 or 25a. [District Rule 4311]

- Stack gas oxygen (O2) shall be determined using EPA Method 3A, EPA Method 7E, or ARB Method 100. [District Rule 4311]
- Source testing shall be conducted using the methods and procedures approved by the District. The District must be notified at least 30 days prior to any compliance source test, and a source test plan must be submitted for approval at least 30 days prior to testing. [District Rules 1081 and 4311]
- The results of each source test shall be submitted to the District within 45 days of completion of the source test. [District Rules 1081 and 4311]

Digester Gas-Fired Engines (S-7831-2-0 & -3-0)

The proposed digester gas-fired engines are subject to District Rule 4702 - Internal Combustion Engines – Phase 2. Section 6.3.2.1 of District Rule 4702 requires source testing of NO_X, CO, and emissions at least once every 24 months for a non-agricultural spark-ignited IC engine. The proposed engine is also subject to 40 CFR 60, Subpart JJJJ – Standards of Performance for Stationary Spark Ignition Internal Combustion Engines. 40 CFR 60, Subpart JJJJ requires uncertified engines rated 500 bhp or more to be source tested every 8,760 hours of operation or every 3 years, whatever comes first. The periodic source testing required by District Rule 4702 and 40 CFR 60, Subpart JJJJ will ensure compliance with the applicable New Source Review (NSR) requirements of District Rule 2201. Therefore, source testing for NO_X, CO, and VOC will be required within 365 days of initial operation and at least once every 8,760 hours of operation or 24 months thereafter, whichever comes first.

The following conditions will be placed on the permits to ensure compliance:

- During the 12-month BACT determination period, if requested by the District, source testing to measure NOx and CO emissions from this unit for monitoring purposes shall be conducted using methods and procedures approved by the District. [District Rules 1081, 2201, and 4702]
- Official source testing to demonstrate compliance with NOx, CO, and VOC emissions limits from this unit shall be conducted within 365 days of initial start-up using the methods specified in this permit. [District Rules 1081, 2201, and 4702 and 40 CFR 60, Subpart JJJJ]
- Source testing to measure NOx, CO, and VOC emissions from this unit shall be conducted at least once every 8,760 hours of operation or 24 months, whichever comes first. [District Rules 1081, 2201, and 4702 and 40 CFR 60, Subpart JJJJ]
- {3791} Emissions source testing shall be conducted with the engine operating either at conditions representative of normal operations or conditions specified in the Permit to Operate. [District Rule 4702]
- For official emissions source testing, the arithmetic average of three 60-consecutive-minute test runs shall apply. Each test run shall be conducted within 10 percent of 100 percent peak (or the highest achievable) load. If two of three runs are above an applicable limit, the test cannot be used to demonstrate compliance with an applicable limit. VOC emissions shall be reported as both methane and as propane. VOC, NOx, and CO concentrations shall be reported in ppmv, corrected to 15% oxygen. [District Rule 4702 and 40 CFR 60, Subpart JJJJ]

- The following methods shall be used for official source testing: NOx (ppmv) - EPA Method 7E, CO (ppmv) - EPA Method 10, VOC (ppmv) - EPA Method 25A or 25B, stack gas oxygen - EPA Method 3 or 3A, stack gas velocity - EPA Method 2 or EPA Method 19, stack gas moisture content - EPA Method 4. Alternative test methods as approved by EPA and the District may also be used to address the source testing requirements of this permit. [District Rules 1081 and 4702 and 40 CFR 60, Subpart JJJJ]
- {109} Source testing shall be conducted using the methods and procedures approved by the District. The District must be notified at least 30 days prior to any compliance source test, and a source test plan must be submitted for approval at least 15 days prior to testing. [District Rule 1081]
- The results of each source test shall be submitted to the District and EPA within 60 days after completion of the source test. [District Rule 1081 and 40 CFR 60, Subpart JJJJ]

2. Monitoring

Plug Flow Digester and Backup Flare (S-7831-1-0)

- During commissioning of the sulfur removal system, the permittee shall measure and record the sulfur content of the digester gas at least once per day using the methods approved in this permit. [District Rule 2201]
- The sulfur content of the digester gas combusted in this flare shall be monitored and recorded monthly. After eight (8) consecutive monthly tests show compliance, the digester gas sulfur content monitoring frequency may be reduced to once every calendar quarter. If quarterly monitoring shows a violation of the digester gas sulfur content limit of this permit, then monthly monitoring shall resume and continue until eight consecutive months of monitoring show compliance with the gas sulfur content limit. Once compliance with the gas sulfur content limit is shown for eight consecutive months, then the monitoring frequency may return to quarterly. Monitoring of the sulfur content of the digester gas shall not be required if the flare does not operate during that period. Records of the results of monitoring of the digester gas sulfur content shall be maintained. [District Rule 2201]
- Monitoring of the digester gas sulfur content shall be performed using a Testo 350 XL portable emission monitor; District-approved in-line H2S monitors; gas detection tubes calibrated for H2S; District-approved source test methods, including EPA Method 11 or EPA Method 15, ASTM Method D1072, D4084, and D5504; or an alternative method approved by the District. Prior to utilization of in-line monitors to demonstrate compliance with the digester gas sulfur content limit of this permit, the permittee shall submit details of the proposed monitoring system, including the make, model, and detection limits, to the District and obtain District approval for the proposed monitor(s). [District Rule 2201]

Digester Gas-Fired Engines (S-7831-2-0 & -3-0)

As stated above, the proposed digester gas-fired engines are subject to District Rule 4702. Section 5.6.1 of District Rule 4702 requires engines equipped with external control devices to install, operate, and maintain an APCO-approved alternate monitoring

plan. Section 5.6.9 of District Rule 4702 requires monitoring of NO_X emissions at least once every calendar quarter for a non-agricultural spark-ignited IC engine. However, Section 6.5.3 of District Rule 4702 requires monthly monitoring for engines equipped with non-certified control devices in order to demonstrate compliance with the emission limits in District Rule 4702. Additionally, considering the more stringent NSR emission limits required in the proposed ATC, the size of the engine, the potential variability of the digester gas fuel, and the fact that hydrogen injection emission control does not yet have an adequately established track record on digester gas-fired units, monthly monitoring gives greater assurance of compliance with the NSR emission limits in the proposed ATCs. Therefore, monthly monitoring of NO_X, CO, and O_2 concentrations in accordance pre-approved alternate monitoring plan "A" will be required. The following conditions will be placed on the permits to ensure compliance:

- The permittee shall monitor and record the stack concentration of NOx, CO, and O2 at least once every month (in which a source test is not performed) using a portable emission monitor that meets District specifications. [In-stack emission monitors may be allowed if they satisfy the standards required for portable analyzers as specified in District policies and are approved in writing by the APCO.] Monitoring shall not be required if the engine is not in operation, i.e. the engine need not be started solely to perform monitoring. Monitoring shall be performed within 5 days of restarting the engine unless monitoring has been performed within the last month. Records must be maintained of the dates of non-operation to validate extended monitoring frequencies. [District Rules 2201 and 4702]
- If either the NOx or CO concentrations corrected to 15% O2, as measured by the portable analyzer, exceed the allowable emission concentration, the permittee shall return the emissions to within the acceptable range as soon as possible, but no longer than 8 hours after detection. If the portable analyzer readings continue to exceed the allowable emissions concentration after 8 hours, the permittee shall notify the District within the following 1 hour, and conduct a certified source test within 60 days of the first exceedance. In lieu of conducting a source test, the permittee may stipulate a violation has occurred, subject to enforcement action. The permittee must then correct the violation, show compliance has been re-established, and resume monitoring procedures. If the deviations are the result of a qualifying breakdown condition pursuant to Rule 1100, the permittee may fully comply with Rule 1100 in lieu of performing the notification and testing required by this condition. During the BACT determination period for NOx, NOx emissions not exceeding 0.60 g-NOx/bhp-hr are not subject to the requirements contained in this condition to source test or stipulate that an emissions violation has occurred. [District Rules 2201 and 4702]
- {3787} All alternate monitoring parameter emission readings shall be taken with the unit operating either at conditions representative of normal operations or conditions specified in the permit-to-operate. The analyzer shall be calibrated, maintained, and operated in accordance with the manufacturer's specifications and recommendations or a protocol approved by the APCO. Emission readings taken shall be averaged over a 15 consecutive-minute period by either taking a cumulative 15 consecutive-minute sample reading or by taking at least five (5) readings, evenly spaced out over the 15 consecutive-minute period. [District Rule 4702]

Because the engine will be fueled on digester gas, which can have a variable composition, the following conditions will also be placed on the permits to ensure compliance:

- During commissioning of the sulfur removal system, the permittee shall measure and record the sulfur content of the primary digester gas stream and the separate scrubbed digester gas stream(s) for use in the hydrogen/syngas reformer(s) at least once per day using the methods approved in this permit. [District Rule 2201]
- The composition of the fuel gas (i.e. CH4, CO2, H2, CO) that enters the engine after a portion has been reformed into hydrogen shall be sampled and analyzed during times in which NOx emissions are being source tested. The composition of the fuel gas that enters the engine after a portion has been reformed into hydrogen shall be either monitored or sampled and analyzed during times in which NOx emissions are monitored with a portable analyze. Records of the results of the analysis and monitoring of the fuel gas shall be maintained. [District Rule 2201 and 4702]
- The HHV and LHV of the fuel gas samples taken in conjunction with source tests shall be determined using ASTM D3588, ASTM 1826, ASTM 1945, or an alternative method approved by the District. [District Rule 2201]
- The sulfur content of the digester gas used to fuel the engine shall be monitored and recorded monthly. After eight (8) consecutive monthly tests show compliance, the fuel sulfur content monitoring frequency may be reduced to once every calendar quarter. If quarterly monitoring shows a violation of the fuel sulfur content limit of this permit, then monthly monitoring shall resume and continue until eight consecutive months of monitoring show compliance with the fuel sulfur content limit. Once compliance with the fuel sulfur content limit is shown for eight consecutive months, then the monitoring frequency may return to quarterly. Monitoring of the sulfur content of the digester gas fuel shall not be required if the engine does not operate during that period. Records of the results of monitoring of the digester gas fuel sulfur content shall be maintained. [District Rule 2201]
- Monitoring of the digester gas sulfur content shall be performed using a Testo 350 XL portable emission monitor; District-approved in-line H2S monitors; gas detection tubes calibrated for H2S; District-approved source test methods, including EPA Method 11 or EPA Method 15, ASTM Method D1072, D4084, and D5504; or an alternative method approved by the District. Prior to utilization of in-line monitors to demonstrate compliance with the digester gas sulfur content limit of this permit, the permittee shall submit details of the proposed monitoring system, including the make, model, and detection limits, to the District and obtain District approval for the proposed monitor(s). [District Rule 2201]

3. Recordkeeping

Recordkeeping is required to demonstrate compliance with the offset, public notification and daily emission limit requirements of Rule 2201. The following recordkeeping conditions will appear on the ATC permits:

Liquid Manure Handling System at Moonlight Dairy (S-5834-3-2):

- {3644} Permittee shall maintain records to demonstrate liquid animal waste does not stand in the fields for more than twenty-four (24) hours after irrigation. [District Rule 4570]
- All records shall be kept and maintained for a minimum of five (5) years and shall be made available to the APCO, ARB and EPA upon request. [District Rules 2201 and 4570]

Plug Flow Digester and Backup Flare (S-7831-1-0)

- The permittee shall maintain records of the design specifications and calculations, including Minimum Treatment Volume (MTV), Hydraulic Retention Time (HRT), and volatile solids loading rate, of the anaerobic digester system in order to demonstrate that each digester has been designed and is operating in accordance with the applicable National Resource Conservation Service (NRCS) technical guide. [District Rules 1070 and 2201]
- Permittee shall maintain daily and annual records of amount of the quantity of digester gas combusted in the flare in MMscf. [District Rule 1070 and 2201]
- During commissioning of the sulfur removal system, the permittee shall measure and record the sulfur content of the digester gas at least once per day using the methods approved in this permit. [District Rule 2201]
- The permittee shall record the total number of days of commissioning of the sulfur removal system, the operating schedule and total amount of time this unit operates during commissioning of the sulfur removal system, and the total amount of gas combusted in permit units S-7831-1, -2, and -3 (digester gas-fired flare and IC engines) each day of the commissioning period. [District Rule 2201]
- All records shall be maintained and retained on-site for a period of at least 5 years and shall be made available for District inspection upon request. [District Rules 1070 and 4311]

Digester Gas-Fired Engines (S-7831-2-0 & -3-0)

- The permittee shall record the total number of days of commissioning of the sulfur removal system, the operating schedule and total amount of time this unit operates during commissioning of the sulfur removal system, and the total amount of gas combusted in permit units S-7831-1, -2, and -3 (digester gas-fired flare and IC engines) each day of the commissioning period. [District Rule 2201]
- The permittee shall maintain records of: (1) the date and time of NOx, CO, and O2 measurements, (2) the O2 concentration in percent and the measured NOx and CO concentrations corrected to 15% O2, (3) make and model of exhaust gas analyzer, (4) exhaust gas analyzer calibration records, and (5) a description of any corrective action taken to maintain the emissions within the acceptable range. [District Rules 2201 and 4702]
- The permittee shall maintain an engine operating log to demonstrate compliance. The engine operating log shall include, on a monthly basis, the following information: the total hours of operation, type and quantity of fuel used, results of fuel composition

monitoring and analysis, maintenance and modifications performed, monitoring data, compliance source test results, and any other information necessary to demonstrate compliance. Quantity of fuel used shall be recorded in standard cubic feet or standard cubic meters using a non-resettable, totalizing mass or volumetric fuel flow meter or other APCO approved-device. [District Rule 4702 and 40 CFR 60, Subpart JJJJ]

- Records of any analyzer(s) installed or utilized to monitor methane, hydrogen, oxygen, or hydrogen sulfide of the fuel gas shall be maintained and shall be made available for District inspection upon request. [District Rule 2201]
- All records shall be maintained and retained for a minimum of five (5) years, and shall be made available for District inspection upon request. All records may be maintained and submitted in an electronic format approved by the District. [District Rules 2201 and 4702]

4. Reporting

Plug Flow Digester and Backup Flare (S-7831-1-0)

As stated above, the proposed flare is subject to District Rule 4311. Section 6.2.1 of District Rule 4311 requires that the operator of a flare subject to a flare minimization plan report unplanned flaring events to the District. Therefore, the following condition will be listed on the permit:

- The operator of a flare subject to a flare minimization plan shall notify the APCO of an unplanned flaring event within 24 hours after the start of the next business day or within 24 hours of their discovery, which ever occurs first. The notification shall include the flare source identification, the start date and time, and the end date and time. [District Rule 4311]

Digester Gas-Fired Engines (S-7831-2-0 & -3-0)

As stated above, the proposed 675 bhp digester gas-fired engines are subject to 40 CFR 60, Subpart JJJJ. 40 CFR 60, Subpart JJJJ requires uncertified engines rated 500 bhp or more to submit an initial notification to EPA. 40 CFR 60, Subpart JJJJ and District Rule 4702 also require the operator or owner of the engine to report source test results within 60 day of the completion of testing. Additionally, if NO_X emissions from the digester gas-fired engine with an NSCR system are found to exceed 0.15 g/bhp-hr after the BACT determination period, the applicant will be required to submit a report containing relevant monitoring data and detailing the steps taken to reduce emissions. Therefore, the following conditions will be listed on the permit:

- If NOx emissions from the engine continue to exceed 0.15 g/bhp-hr after the BACT determination period, the permittee shall have 60 days to submit a report containing all monitoring and source test information to the District. The report shall also include an explanation of the steps taken to operate and maintain the engine in such a manner as to minimize NOx emissions and a detailed analysis of all factors that prohibit compliance with the NOx emissions limit. In the report, the permittee may also propose a final BACT emission limit for NOx for inclusion in this permit. The monitoring data and source test information gathered in accordance with this permit may be shared with other technical experts so their input can be considered when

determining the final BACT limit for NOx that can be consistently achieved. [District Rule 2201]

- The results of each source test shall be submitted to the District and EPA within 60 days after completion of the source test. [District Rule 1081 and 40 CFR 60, Subpart JJJJ]
- Notification of the date construction of this engine commenced shall be submitted to the District and EPA and shall be postmarked no later than 30 days after such date as construction commenced. The notification shall contain the following information: 1) Name and address of the owner or operator; 2) The address of the affected source; 3) Engine information including make, model, engine family, serial number, model year, maximum engine power, and engine displacement; 4) Emission control equipment; and 5) Fuel used. Notification of construction and copies of source test results shall be submitted to EPA at the following address: Director, Air Division, U.S. Environmental Protection Agency, 75 Hawthorne Street, San Francisco, CA 94105. [40 CFR 60, Subpart JJJJ]

F. Ambient Air Quality Analysis (AAQA)

Section 4.14.1 of District Rule 2201 requires that an ambient air quality analysis (AAQA) be conducted for the purpose of determining whether a new or modified Stationary Source will cause or make worse a violation of an air quality standard. The Technical Services Division of the SJVAPCD conducted the required analysis. Refer to Appendix F of this document for the AAQA summary sheet. In order to ensure that there would not be a violation of the Ambient Air Quality Standards for SO_2, only one engine would be allowed to operate. The results of the Criteria Pollutant Modeling conducted for the AAQA are summarized in the following table:

Criteria Pollutant Modeling Results*					
Digester Gas-Fired IC Engines	**1 Hour**	**3 Hours**	**8 Hours.**	**24 Hours**	**Annual**
CO	Pass	X	Pass	X	X
NO_X	Pass	X	X	X	Pass
SO_X	Pass[1]	Pass[1]	X	Pass	Pass
PM_{10}	X	X	X	Pass[2]	Pass[2]

*Results were taken from the PSD spreadsheet.
*Note: NO_2 values reflect the new 1 Hr standard imposed by EPA on April 12, 2010
[1]SOx passes only if: During commissioning only 1 unit operates at a time; and 2 (or 3) units operate simultaneously only after, for each unit, sulfur ppmv is less than or equal to 1,000 ppmv.
[2]The criteria pollutants are below EPA's level of significance as found in 40 CFR Part 51.165 (b)(2).

Rule 2520 Federally Mandated Operating Permits

Since this facility's potential emissions do not exceed any major source thresholds of Rule 2201, this facility is not a major source, and Rule 2520 does not apply.

Rule 4101 Visible Emissions

Section 5.0 stipulates that no person shall discharge into the atmosphere emissions of any air contaminant aggregating more than 3 minutes in any hour which is as dark as or darker than Ringelmann 1 (or 20% opacity).

Dairy Permit - Liquid Manure Handling (S-5834-3-2)

Pursuant to Section 4.12, emissions subject to or specifically exempt from Regulation VIII (Fugitive PM10 Prohibitions) are considered to be exempt.

Pursuant to District Rule 8081, Section 4.1, on-field agricultural sources are exempt from the requirements of Regulation VIII.

An on-field agricultural source is defined in Rule 8011, Section 3.35 as the following:

- Activities conducted solely for the purpose of preparing land for the growing of crops or the raising of fowl or animals, such as brush or timber clearing, grubbing, scraping, ground excavation, land leveling, grading, turning under stalks, disking, or tilling;

The dairy permit units in this project are used solely for the raising of dairy animals. Therefore, these units are exempt from the provisions of this rule.

Plug Flow Digester and Backup Flare (S-7831-1-0)

Since the flare will combust solely gaseous fuel, visible emissions are not expected to exceed Ringelmann 1 or 20% opacity as long as the equipment is properly maintained and operated. Additionally, to ensure compliance with the particulate matter emission limit, visible emissions from the flare will be limited to no more than 5% opacity. Therefore, the following condition will be listed on the proposed ATC permits to ensure compliance:

- No air contaminant shall be discharged into the atmosphere from the flare for a period or periods aggregating more than three minutes in any one hour which is as dark as, or darker than, Ringelmann 1/4 or 5% opacity. [District Rules 2201 and 4101]

Digester Gas-Fired Engines (S-7831-2-0 & -3-0)

Since the IC engines will be fired solely on gaseous fuel, visible emissions are not expected to exceed Ringelmann 1 or 20% opacity as long as the equipment is properly maintained and operated. Therefore, the following condition will be listed on the proposed ATC permits to ensure compliance:

- {15} No air contaminant shall be discharged into the atmosphere for a period or periods aggregating more than three minutes in any one hour which is as dark as, or darker than, Ringelmann 1 or 20% opacity. [District Rule 4101]

Rule 4102 Nuisance

Section 4.0 prohibits discharge of air contaminants which could cause injury, detriment, nuisance or annoyance to the public.

California Health and Safety Code 41700 (Health Risk Assessment)

District Policy APR 1905 – Risk Management Policy for Permitting New and Modified Sources specifies that for an increase in emissions associated with a proposed new source or modification, the District perform an analysis to determine the possible impact to the nearest resident or worksite.

An HRA is not required for a project with a total facility prioritization score of less than or equal to one. According to the Technical Services Memo for this project (Appendix F), the total facility prioritization score including this project was less than or equal to one. Therefore, no future analysis is required to determine the impact from this project and compliance with the District's Risk Management Policy is expected.

Risk Summary					
Categories	**Plug Flow Anaerobic Digester & Backup Flare (S-7831-1-0)**	**675 bhp Digester Gas-Fired IC Engine (S-7831-2-0)**	**675 bhp Digester Gas-Fired IC Engine (S-7831-3-0)**	**Project Totals**	**Facility Totals**
Prioritization Score[1]	0.01	0.03	0.03	0.07	0.07
Acute Hazard Index	N/A[1]	N/A[1]	N/A[1]	0.31	0.0
Chronic Hazard Index	N/A[1]	N/A[1]	N/A[1]	0.05	0.0
Maximum Individual Cancer Risk (10^{-6})	N/A[1]	N/A[1]	N/A[1]	1.7	0.0
T-BACT Required?	**No**	**No**	**No**		
Special Permit Conditions?	**Yes**	**Yes**	**Yes**		

1 No further analysis was required since the prioritization score for the project was less than 1.0.

Discussion of T-BACT

BACT for toxic emission control (T-BACT) is required if the cancer risk exceeds one in one million. As demonstrated above, T-BACT is not required for this project because the HRA indicates that the risk is not above the District's thresholds for triggering T-BACT requirements; therefore, compliance with the District's Risk Management Policy is expected.

District policy APR 1905 also specifies that the increase in emissions associated with a proposed new source or modification not have acute or chronic indices, or a cancer risk greater than the District's significance levels (i.e. acute and/or chronic indices greater than 1 and a cancer risk greater than 10 in a million). As outlined by the HRA Summary in Appendix F of this report, the emissions increases for this project was determined to be less than significant. The following conditions will be placed on the permit to ensure compliance with the assumptions of the HRA:

- {1898} The exhaust stack shall vent vertically upward. The vertical exhaust flow shall not be impeded by a rain cap (flapper ok), roof overhang, or any other obstruction. [District Rule 4102]

- No more than one of permit units S-7831-1, -2, and -3 (digester gas-fired flare and IC engines) shall operate at any one time until the measured sulfur content of the digester gas is 1,000 ppmv or less for at least three consecutive days. [District Rule 2201]

Rule 4201 Particulate Matter Concentration

The purpose of this rule is to protect the ambient air quality by establishing a particulate matter emission standard. Section 3.1 prohibits discharge of dust, fumes, or total particulate matter into the atmosphere from any single source operation in excess of 0.1 grain per dry standard cubic foot.

Proposed Plug Flow Digester System with Backup Flare (S-7831-1-0)

$$0.008 \quad \frac{lb-PM}{1\,MMBtu} \times \frac{1\,MMBtu}{9{,}100\,dscf} \times \frac{7{,}000\,grain}{1\,lb} = \quad 0.006 \quad \frac{grain}{dscf}$$

Since 0.006 grain/dscf is less than 0.1 grain/dscf, compliance with this rule is expected.

Proposed Digester Gas-Fired IC Engines (S-7831-2-0 & -3-0)

$$0.07 \quad \frac{g}{hp \cdot hr} \times \frac{1\,hp \cdot hr}{2{,}545\,Btu} \times \frac{10^6\,Btu}{9{,}100\,dscf} \times \frac{0.33\,Btu_{out}}{1\,Btu_{in}} \times \frac{15.43\,grain}{g} = \quad 0.015 \quad \frac{grain}{dscf}$$

Since 0.015 grain/dscf is less than 0.1 grain/dscf, compliance with this rule is expected.

The following condition will be listed on the proposed ATC permits to ensure compliance:

- {14} Particulate matter emissions shall not exceed 0.1 grains/dscf in concentration. [District Rule 4201]

District Rule 4311 Flares

The purpose of this rule is to limit the emissions of volatile organic compounds (VOCs) and oxides of nitrogen (NO_X) from the operation of flares.

Section 5.2 requires that a flame always be present in the flare whenever combustible gases are present. The following condition will be placed on the permit to ensure compliance:

- A flame shall be present at all times in the flare whenever combustible gases are vented through the flare. [District Rule 4311]

Section 5.3 requires that the flare be equipped with either an automatic ignition system or operated with a continuous pilot. Per the applicant, this unit is equipped with an automatic ignition system. The following condition will be placed on the permit to ensure compliance:

- The flare outlet shall be equipped with an automatic ignition system, or shall operate with a pilot flame present at all times when combustible gases are vented through the flare, except during purge periods for automatic-ignition equipped flares. [District Rule 4311]

Section 5.4 requires that, except for flares equipped with a flow-sensing ignition system, flares must be equipped with a device to monitor and confirm operation of the pilot flame. The following condition will be placed on the permit to ensure compliance:

- Unless the flare is equipped with a flow-sensing ignition system, the flare shall be equipped and operated with a heat sensing device such as a thermocouple, ultraviolet beam sensor, infrared sensor, or an equivalent device, capable of continuously detecting at least one pilot flame. [District Rule 4311]

Section 5.5 requires that flares that use flow-sensing automatic ignition systems and which do not use a continuous flame pilot must use purge gas for purging. The following condition will be placed on the permit to ensure compliance:

- Flares that use flow-sensing automatic ignition systems and which do not use a continuous flame pilot shall use purge gas for purging. [District Rule 4311]

Section 5.6 requires open flares (air-assisted, steam-assisted, or non-assisted) in which the flare gas pressure is less than 5 psig to be operated in such a manner that meets the provisions of 40 CFR 60.18. The applicant is proposing a fully enclosed flare; therefore the requirements of this section are not applicable.

Section 5.7 requires ground-level enclosed flares to meet the following emission standards:

Type of Flare and Heat Release Rate in MMBtu/hr	VOC (lb/MMBtu)	NOx (lb/MMBtu)
Without Steam-assist		
<10 MMBtu/hr	0.0051	0.0952
10-100 MMBtu/hr	0.0027	0.1330
>100 MMBtu/hr	0.0013	0.5240
With Steam-assist		
All	0.14 as TOG	0.068

The proposed flare (S-7831-1) is rated at approximately 9.0 MMBtu/hr. Therefore, it is subject to emission limits of 0.0051 lb-VOC/MMBtu and 0.0952 lb-NO_X/MMBtu for flares rated < 10 MMBtu/hr. The following condition will be placed on the permit to ensure compliance:

- Emissions from the flare shall not exceed any of the following limits: 0.06 lb-NOx/MMBtu, 0.008 lb-PM10/MMBtu, 0.37 lb-CO/MMBtu, or 0.0051 lb-VOC/MMBtu. [District Rules 2201 and 4311]

Section 5.8 prohibits flaring unless it is consistent with an approved flare minimization plan (FMP), pursuant to Section 6.5 or is caused by an emergency and is necessary to prevent an accident, hazard, or release of vent gas directly to the atmosphere. The following condition will be placed on the permit to ensure compliance:

- Flaring is prohibited unless it is consistent with an approved flare minimization plan, pursuant to Section 6.5 of District Rule 4311. This standard shall not apply if the APCO determines that such flaring is caused by an emergency and is necessary to prevent an accident, hazard, or release of gas directly to the atmosphere. [District Rule 4311]

Section 5.9 establishes SO_2 emission reduction standards for petroleum refinery flares. The proposed flare is not a petroleum refinery flare. Therefore, this section does not apply.

Section 5.10 requires the operator of a flare subject to flare minimization requirements pursuant to monitor the vent gas flow to the flare with a flow measuring device and to maintain records pursuant to Section 6.1.7. Flares that the operator can verify, based on permit conditions, are not capable of producing reportable flare events are not required to monitor vent gas flow to the flare. Section 3.31 defines reportable flaring event as: *"any flaring where more than 500,000 standard cubic feet of vent gas is flared per calendar day, or where sulfur oxide emissions are greater than 500 pounds per calendar day."* The digester gas-fired backup flare will be limited by permit conditions to combusted no more than 360,000 standard cubic feet per day. Therefore, this section does not apply.

Section 5.11 requires the operator of a petroleum refinery or a flare with a flaring capacity equal to or greater than 50 MMBtu/hr to monitor the flare pursuant to Sections 6.6, 6.7, 6.8, 6.9, and 6.10. The proposed flare is not a petroleum refinery flare. Therefore, this section does not apply.

Section 6.1 requires the operator of a flare to maintain certain records for five years. The following conditions will be placed on the permit to ensure compliance:

- Copies of approved flare minimization plan shall be made readily available to the APCO, ARB, and EPA upon request for a minimum of 5 years. [District Rule 4311]
- All records shall be maintained and retained on-site for a period of at least 5 years and shall be made available for District inspection upon request. [District Rules 1070 and 4311]

Section 6.2.1 requires the operator of a flare subject to flare minimization plans pursuant to Section 5.8 to notify the APCO of an unplanned flaring event within 24 hours after the start of the next business day or within 24 hours of their discovery, which ever occurs first. The notification shall include the flare source identification, the start date and time, and the end date and time. The following condition will be placed on the permit to ensure compliance:

- The operator of a flare subject to a flare minimization plan shall notify the APCO of an unplanned flaring event within 24 hours after the start of the next business day or within 24 hours of their discovery, which ever occurs first. The notification shall include the flare source identification, the start date and time, and the end date and time. [District Rule 4311]

Section 6.3 specifies test methods to demonstrate compliance with Rule 4311. The following condition will be placed on the permit to ensure compliance:

- For source test purposes, NOx emissions from the flare shall be determined using EPA Method 19 on a heat input basis, or EPA Method 3A, EPA Method 7E, or ARB Method 100 on a ppmv basis. [District Rule 4311]
- For source test purposes, VOC emissions from the flare shall be determined using EPA Method 25 or 25a. [District Rule 4311]
- Stack gas oxygen (O2) shall be determined using EPA Method 3A, EPA Method 7E, or ARB Method 100. [District Rule 4311]

Section 6.4.2 requires the operator of ground-level enclosed flares to conduct source testing at least once every 12 months to demonstrate compliance with Section 5.7. The operator shall submit a copy of the testing protocol to the APCO at least 30 days in advance of the scheduled

testing. The operator shall submit the source test results not later than 45 days after completion of the source testing. The following conditions will be placed on the permit to ensure compliance:

- Source testing to measure NOx and VOC emissions from the digester-fired flare shall be conducted within 120 days of initial start-up and at least once every twelve (12) months, thereafter. [District Rules 2201 and 4311]
- For source test purposes, NOx emissions from the flare shall be determined using EPA Method 19 on a heat input basis, or EPA Method 3A, EPA Method 7E, or ARB Method 100 on a ppmv basis. [District Rule 4311]
- For source test purposes, VOC emissions from the flare shall be determined using EPA Method 25 or 25a. [District Rule 4311]
- Stack gas oxygen (O2) shall be determined using EPA Method 3A, EPA Method 7E, or ARB Method 100. [District Rule 4311]
- Source testing shall be conducted using the methods and procedures approved by the District. The District must be notified at least 30 days prior to any compliance source test, and a source test plan must be submitted for approval at least 30 days prior to testing. [District Rules 1081 and 4311]
- The results of each source test shall be submitted to the District within 45 days of completion of the source test. [District Rules 1081 and 4311]

Section 6.5 requires the operator of a petroleum refinery flare or any flare that has a flaring capacity of greater than or equal to 5.0 MMBtu per hour to submit a flare minimization plan (FMP) to the APCO for approval, specifies information that the FMP must contain, and requires periodic updates of the FMP. The following conditions will be placed on the permit to ensure compliance:

- Prior to installation of the flare, the operator shall submit a flare minimization plan in accordance with District Rule 4311. [District Rule 4311]
- The flare minimization plan shall include all information required by District Rule 4311, including but not limited to: 1) A description and technical specifications for each flare; 2) Detailed process flow diagrams of all upstream equipment and process units venting to each flare; 3) A description of equipment, processes, or procedures the operator plans to install or implement to eliminate or minimize flaring and planned date of installation or implementation; 4) An evaluation of prevention measures to reduce flaring that has occurred or may be expected to occur during planned major maintenance activities, including startup and shutdown; 5) An evaluation of preventative measures to reduce flaring that may be expected to occur due to issues of gas quantity and quality; 6) An evaluation of preventative measures to reduce flaring caused by the recurrent failure of equipment or a normal operating process; and 7) Any other information requested by the APCO as necessary for determination of compliance with applicable provisions of Rule 4311. [District Rule 4311]
- The operator shall submit an updated flare minimization plan for each flare to the APCO for approval every five years after the initial submittal and prior to installing any equipment that would require an ATC and would impact the emissions from the flare. [District Rule 4311]

Sections 6.6, 6.7, 6.8, and 6.9 require additional monitoring for petroleum refinery flares and any flare that has a flaring capacity of greater than or equal to 50 MMBtu per hour. The proposed flare is not a petroleum refinery flare and has a flaring capacity of less than 50 MMBtu/hr. Therefore, these sections do not apply.

Section 6.10 requires the operator of a petroleum refinery flare to install and maintain equipment that records a real-time digital image of the flare and flame or to use an alternative monitoring method that provides data to verify date, time, vent gas flow, and duration of flaring events. The proposed flare is not a petroleum refinery flare. Therefore, this section does not apply.

Based on the information above, compliance with District Rule 4311 is expected.

Rule 4550 Conservation Management Practices (CMP)

This rule applies to agricultural operation sites located within the San Joaquin Valley Air Basin. The purpose of this rule is to limit fugitive dust emissions from agricultural operation sites.

Pursuant to Section 5.1, effective on and after July 1, 2004, an owner/operator shall implement the applicable CMPs selected pursuant to Section 6.2 for each agricultural operation site.

Pursuant to Section 5.2, an owner/operator shall prepare and submit a CMP application for each agricultural operation site to the APCO for approval.

Moonlight Dairy received District approval for its CMP plan on December 11, 2009.

Rule 4570 Confined Animal Facilities (CAF)

This rule applies to Confined Animal Facilities (CAF) located within the San Joaquin Valley Air Basin. The purpose of this rule is to limit emissions of Volatile Organic Compounds (VOC) from Confined Animal Facilities (CAF).

Moonlight Dairy was issued ATCs to modify the dairy permits to comply with District Rule 4570 on April 20, 2007. These mitigation measures will also be incorporated into the ATC permit for the liquid manure handling system at the dairy. Therefore, compliance with this rule is expected.

Rule 4701 Internal Combustion Engines – Phase 1

The purpose of this rule is to limit the emissions of nitrogen oxides (NO_X), carbon monoxide (CO), and volatile organic compounds (VOC) from internal combustion engines. Except as provided in Section 4.0, the provisions of this rule apply to any internal combustion engine rated greater than 50 bhp that requires a Permit to Operate (PTO). However, the proposed engines are subject to District Rule 4702, Internal Combustion Engines – Phase 2. Pursuant to Section 7.6 of District Rule 4702, an engine that is subject to the requirements of District Rule 4702 is exempt from District Rule 4701; therefore, the engines are exempt from the requirements of this rule. Although the engines are exempt from District Rule 4701, the engines will be subject to the more stringent emission limits of District Rules 2201 and 4702.

Rule 4702 Internal Combustion Engines – Phase 2

The purpose of this rule is to limit the emissions of nitrogen oxides (NO_X), carbon monoxide (CO), and volatile organic compounds (VOC) from spark-ignited internal combustion engines.

This rule applies to any spark-ignited internal combustion engine with a rated brake horsepower greater than 50 horsepower.

Section 5.1 requires that the owner of an internal combustion engine shall not operate it in such a manner that results in emissions exceeding the limits in the Engine Emission Limits table below for the appropriate engine type, according to the compliance schedule listed in Section 7.0. An engine shall be restricted by permit condition to emissions limits, in ppmv (corrected to 15% oxygen on a dry basis), that meet or exceed the following applicable emission limits pursuant to Section 5.1 or Section 8.2.

Rule 4702 Emission Limits			
Engine Type	**NO_X Emission Limit (ppmv @ 15% O_2, dry)**	**CO Emission Limit (ppmv @ 15% O_2, dry)**	**VOC Emission Limit (ppmv @ 15% O_2, dry)**
1. a. Rich Burn, Waste Gas Fueled	50 ppmv or 90% reduction	2,000 ppmv	250 ppmv
1. b. Rich Burn, Cyclic Loaded, Field Gas Fueled	50 ppmv	2,000 ppmv	250 ppmv
1. c. Rich Burn, All Other Engine	25 ppmv or 96% reduction	2,000 ppmv	250 ppmv
2. a. Lean Burn 2-Stroke, Gaseous Fueled, < 100 hp	75 ppmv or 85% reduction	2,000 ppmv	750 ppmv
2. b. Lean Burn, All Other Engines	65 ppmv or 90% reduction	2,000 ppmv	750 ppmv
3. Rich-Burn Engine Used Exclusively in Agricultural Operations			
a. Comply by 1/1/2009, or if owner has an agreement to electrify, comply by 1/1/2010	90 ppmv or 80% reduction	2000 ppmv	250 ppmv
4. Lean-Burn Engine Used Exclusively in Agricultural Operations			
a. Comply by 1/1/2009 or if owner has an agreement to electrify comply by 1/1/2010	150 ppmv or 70% reduction	2000 ppmv	750 ppmv
5. Certified Spark-Ignited Engine Used Exclusively in AO and installed on or before June 16, 2005			
a. Comply by 6/1/2006	Meet Certified Spark-Ignited Engine Standard of HC+NOx < 0.6 g/bhp-hr		

The proposed digester gas-fired IC engines will be located at the dairy but will not be operated by the dairy. The digester, flare, and IC engines will be operated as a separate facility (at the same stationary source) by a separate company that specializes in generation of energy from biogas; therefore, the District has determined that the IC engines are non-agricultural units. The lean burn, digester gas-fired, engines are waste gas-fired engines and are required to meet the following emissions limits: 65 ppmvd NO_X, 2,000 ppmvd CO, and 750 ppmvd VOC (all measured @ 15% O_2).

The applicant has requested that the emission limits for the permits be listed in g/bhp-hr rather than ppmv so the exact ppmv values can determined based on the composition of the gas and the efficiency of the engines. The applicant has proposed the following maximum emissions limits: 0.15 g-NO_X/bhp-hr; 2.20 g-CO/bhp-hr; and 0.20 g-VOC/bhp-hr. These emission limits are expected to be less than or equal to the following ppmv values: 44 ppmvd NO_X @ 15% O_2; 266 ppmvd CO @ 15% O_2; and 42 ppmvd VOC (as methane) @ 15% O_2. Therefore, compliance with this section of the rule is expected.

Section 5.2 requires that all continuous emission monitoring systems (CEMS) emissions measurements shall be averaged over a period of 15 consecutive minutes. Any 15-consecutive minute block average CEMS measurement exceeding the applicable emission limits of this rule shall constitute a violation of this rule. The IC engines proposed under this project will not have CEMS installed; therefore this section of the rule is not applicable.

Section 5.6 requires that the owner of a non-agricultural IC engine (excluding those engines subject to Section 4.2 or Section 4.3 unless otherwise specified) subject to the requirements of this rule meet the following requirements:

> For each engine with a rated brake horsepower of 1,000 hp or greater and which is permitted to operate more than 2,000 hours per calendar year, or with an external emission control device, shall either install, operate, and maintain continuous monitoring equipment for NO_X, CO, and oxygen, as identified in Rule 1080 (Stack Monitoring), or install, operate, and maintain APCO-approved alternate monitoring. The monitoring system may be a continuous emissions monitoring system (CEMS), a parametric emissions monitoring system (PEMS), or an alternative monitoring system approved by the APCO. APCO-approved alternate monitoring shall consist of one or more of the following:
>
> - Periodic NO_X and CO emission concentrations,
> - Engine exhaust oxygen concentration,
> - Air-to-fuel ratio,
> - Flow rate of reducing agents added to engine exhaust,
> - Catalyst inlet and exhaust temperature,
> - Catalyst inlet and exhaust oxygen concentration,
> - Other operational characteristics.

The engines will meet this section of the Rule using a pre-approved alternate emissions monitoring plan that specifies that the permittee perform periodic NO_X, CO, and O_2 emissions concentrations as specified in District Policy SSP-1810, dated 4/29/04. Therefore, the following condition will be placed on the ATC permits:

- The permittee shall monitor and record the stack concentration of NOx, CO, and O2 at least once every month (in which a source test is not performed) using a portable emission monitor that meets District specifications. [In-stack emission monitors may be allowed if they satisfy the standards required for portable analyzers as specified in District policies and are approved in writing by the APCO.] Monitoring shall not be required if the engine is not in operation, i.e. the engine need not be started solely to perform monitoring. Monitoring shall be performed within 5 days of restarting the engine unless monitoring has been performed within the last month. Records must be maintained of the dates of non-operation to validate extended monitoring frequencies. [District Rules 2201 and 4702]

Section 5.6.6 requires that for each non-agricultural IC engine, including an engine subject to Section 4.2, install and operate a nonresettable elapsed operating time meter. In lieu of installing a nonresettable time meter, the owner or operator may use an alternative device, method, or technique in determining operating time provided that the alternative is approved by the APCO. The owner or operator shall maintain the required meter in proper operating condition. The applicant has proposed a nonresettable elapsed operating time meter for the engines involved with this project. Therefore, the following condition will be placed on the ATC permits to ensure compliance:

- This engine shall be equipped with an operational non-resettable elapsed time meter. [District Rules 2201 and 4702]

Section 5.6.7 requires that for each engine, the permittee shall implement the Inspection and Monitoring (I&M) plan submitted to and approved by the APCO pursuant to Section 6.5. The applicant has submitted an I&M program with this ATC application and the requirements of this plan will be explained in detail in the section that covers Section 6.5 of this Rule.

Section 5.6.8 requires that for each engine, collect data through the I&M plan in a form approved by the APCO. The applicant has submitted an I&M program and the requirements of this plan will be explained in detail in the section that covers Section 6.5 of this Rule.

Section 5.6.9 requires that each non-agricultural IC engine, use a portable NO_X analyzer to take NO_X emission readings to verify compliance with the emission requirements of Section 5.1 or Section 8.2 during each calendar quarter in which a source test is not performed. All emission readings shall be taken with the engine operating either at conditions representative of normal operations or conditions specified in the Permit-to-Operate. The analyzer shall be calibrated, maintained, and operated in accordance with the manufacturer's specifications and recommendations or a protocol approved by the APCO. All NO_X emissions readings shall be reported to the APCO in a manner approved by the APCO. NO_X emission readings taken pursuant to this section shall be averaged over a 15 consecutive-minute period by either taking a cumulative 15 consecutive minute sample reading or by taking at least five (5) readings evenly spaced out over the 15 consecutive-minute period. Therefore, the following conditions will be placed on the ATC permits:

- The permittee shall monitor and record the stack concentration of NOx, CO, and O2 at least once every month (in which a source test is not performed) using a portable emission monitor that meets District specifications. [In-stack emission monitors may be allowed if they satisfy the standards required for portable analyzers as specified in District policies and are approved in writing by the APCO.] Monitoring shall not be required if the engine is not in operation, i.e. the engine need not be started solely to perform monitoring. Monitoring shall be performed

within 5 days of restarting the engine unless monitoring has been performed within the last month. Records must be maintained of the dates of non-operation to validate extended monitoring frequencies. [District Rules 2201 and 4702]

- {3787} All alternate monitoring parameter emission readings shall be taken with the unit operating either at conditions representative of normal operations or conditions specified in the permit-to-operate. The analyzer shall be calibrated, maintained, and operated in accordance with the manufacturer's specifications and recommendations or a protocol approved by the APCO. Emission readings taken shall be averaged over a 15 consecutive-minute period by either taking a cumulative 15 consecutive-minute sample reading or by taking at least five (5) readings, evenly spaced out over the 15 consecutive-minute period. [District Rule 4702]

Section 6.1 requires that the owner of an engine subject to the requirements of this rule shall submit to the APCO an emission control plan of all actions to be taken to satisfy the emission requirements of Section 5.1 and the compliance schedules of Section 7.0. Such emission control plan shall contain a list with the following for each permitted engine:

- Permit-to-Operate number
- Engine manufacturer
- Model designation
- Rated brake horsepower
- Type of fuel and type of ignition
- Combustion type: rich-burn or lean-burn
- Total hours of operation in the previous one-year period, including typical daily operating schedule
- Fuel consumption (cubic feet for gas or gallons for liquid) for the previous one-year period
- Stack modifications to facilitate continuous in-stack monitoring and to facilitate source testing
- Type of control to be applied, including in-stack monitoring specifications
- Applicable emission limits
- Documentation showing existing emissions of NO_X, VOC, and CO, and
- Date that the engine will be in full compliance with Rule 4702.

Section 6.1.2 requires that the emission control plan shall identify the type of emission control device or technique to be applied to each engine and a construction/removal schedule, or shall provide support documentation sufficient to demonstrate that the engine is in compliance with the emission requirements of this rule.

The applicant has submitted all the required information for Section 6.1 in the application for the IC engines involved with this project.

Section 6.2 requires that except for engines subject to Section 4.0, the owner of an engine subject to the requirements of this rule shall maintain an engine operating log to demonstrate compliance with this rule. This information shall be retained for a period of at least five years, shall be readily available, and be made available to the APCO upon request. The engine operating log shall include, on a monthly basis, the following information:

- Total hours of operation,
- Type and quantity (cubic feet of gas or gallons of liquid) of fuel used,
- Maintenance or modifications performed,
- Monitoring data,
- Compliance source test results, and
- Any other information necessary to demonstrate compliance with this rule.

Therefore, the following condition will be placed on the ATC permits:

- The permittee shall maintain an engine operating log to demonstrate compliance. The engine operating log shall include, on a monthly basis, the following information: the total hours of operation, type and quantity of fuel used, results of fuel composition monitoring and analysis, maintenance and modifications performed, monitoring data, compliance source test results, and any other information necessary to demonstrate compliance. Quantity of fuel used shall be recorded in standard cubic feet or standard cubic meters using a non-resettable, totalizing mass or volumetric fuel flow meter or other APCO approved-device. [District Rule 4702 and 40 CFR 60, Subpart JJJJ]

Section 6.2.2 requires that the data collected pursuant to the requirements of Section 5.6 shall be maintained for at least five years, shall be readily available, and made available to the APCO upon request.

Therefore, the following previously proposed condition will be listed on the proposed ATC permits to ensure compliance:

- All records shall be maintained and retained for a minimum of five (5) years, and shall be made available for District inspection upon request. All records may be maintained and submitted in an electronic format approved by the District. [District Rules 2201 and 4702]

Section 6.3 requires that the owner of an engine subject to the emission limits in Section 5.1 or the requirements of Section 8.2, shall:

Demonstrate compliance with applicable limits by the applicable date specified in Section 7.6 and at least once every 24 months thereafter, in accordance with the test methods in Section 6.4.

Conduct emissions source testing with the engine operating either at conditions representative of normal operations or conditions specified in the Permit-to-Operate. For emissions source testing performed pursuant to Section 6.3.1 for the purpose of determining compliance with an applicable standard or numerical limitation, the arithmetic average of three (3) 30-consecutive-minute test runs shall apply. If two (2) of three (3) runs are above an applicable limit, the test cannot be used to demonstrate compliance with an applicable limit. VOC shall be reported as methane. VOC, NO_X, and CO concentrations shall be reported in ppmv, corrected to 15 percent oxygen. For engines that comply with a percent reduction limit in Table 1, the percent reduction of NO_X emissions shall also be reported.

In addition to other information, the source test protocol shall describe which critical parameters will be measured and how the appropriate range for these parameters shall be

established. The range for these parameters shall be incorporated into the I&M plan. Therefore, the following conditions will appear on the ATC permits to ensure compliance:

- Official source testing to demonstrate compliance with NOx, CO, and VOC emissions limits from this unit shall be conducted within 365 days of initial start-up using the methods specified in this permit. [District Rules 1081, 2201, and 4702 and 40 CFR 60, Subpart JJJJ]
- Source testing to measure NOx, CO, and VOC emissions from this unit shall be conducted at least once every 8,760 hours of operation or 24 months, whichever comes first. [District Rules 1081, 2201, and 4702 and 40 CFR 60, Subpart JJJJ]
- {3791} Emissions source testing shall be conducted with the engine operating either at conditions representative of normal operations or conditions specified in the Permit to Operate. [District Rule 4702]
- For official emissions source testing, the arithmetic average of three 60-consecutive-minute test runs shall apply. Each test run shall be conducted within 10 percent of 100 percent peak (or the highest achievable) load. If two of three runs are above an applicable limit, the test cannot be used to demonstrate compliance with an applicable limit. VOC emissions shall be reported as both methane and as propane. VOC, NOx, and CO concentrations shall be reported in ppmv, corrected to 15% oxygen. [District Rule 4702 and 40 CFR 60, Subpart JJJJ]

Section 6.4 requires that the compliance with the requirements of Section 5.0 shall be determined in accordance with the following test procedures or any other method approved by EPA and the APCO:

- Oxides of nitrogen - EPA Method 7E, or ARB Method 100.
- Carbon monoxide - EPA Method 10, or ARB Method 100.
- Stack gas oxygen - EPA Method 3 or 3A, or ARB Method 100.
- Volatile organic compounds - EPA Method 25A or 25B, or ARB Method 100.
- Operating horsepower determination - any method approved by EPA and the APCO.

Therefore, the following previously proposed condition will be listed on the proposed ATCs:

- The following methods shall be used for official source testing: NOx (ppmv) - EPA Method 7E, CO (ppmv) - EPA Method 10, VOC (ppmv) - EPA Method 25A or 25B, stack gas oxygen - EPA Method 3 or 3A, stack gas velocity - EPA Method 2 or EPA Method 19, stack gas moisture content - EPA Method 4. Alternative test methods as approved by EPA and the District may also be used to address the source testing requirements of this permit. [District Rules 1081 and 4702 and 40 CFR 60, Subpart JJJJ]

Section 6.5 requires that the owner of an engine subject to the emission limits in Section 5.1 or the requirements of Section 8.2, shall submit to the APCO for approval, an I&M plan that specifies all actions to be taken to satisfy the following requirements and the requirements of Section 5.6. The actions to be identified in the I&M plan shall include, but are not limited to, the following:

Section 6.5.2 specifies procedures requiring the owner or operator to establish ranges for control equipment parameters, engine operating parameters, and engine exhaust oxygen

concentrations that source testing has shown result in pollutant concentrations within the rule limits.

Section 6.5.3 specifies procedures for monthly inspections as approved by the APCO. The applicable control equipment parameters and engine operating parameters will be inspected and monitored monthly in conformance with a regular inspection schedule listed in the I&M plan. The alternate monitoring program will ensure compliance with Sections 6.5.1 and 6.5.2 of the Rule.

Therefore, the following previously proposed condition will be listed on the proposed ATC permits to ensure compliance:

- The permittee shall monitor and record the stack concentration of NOx, CO, and O2 at least once every month (in which a source test is not performed) using a portable emission monitor that meets District specifications. [In-stack emission monitors may be allowed if they satisfy the standards required for portable analyzers as specified in District policies and are approved in writing by the APCO.] Monitoring shall not be required if the engine is not in operation, i.e. the engine need not be started solely to perform monitoring. Monitoring shall be performed within 5 days of restarting the engine unless monitoring has been performed within the last month. Records must be maintained of the dates of non-operation to validate extended monitoring frequencies. [District Rules 2201 and 4702]

Section 6.5.4 specifies procedures for the corrective actions on the noncompliant parameter(s) that the owner or operator will take when an engine is found to be operating outside the acceptable range for control equipment parameters, engine operating parameters, and engine exhaust NO_X, CO, VOC, or oxygen concentrations.

Section 6.5.5 specifies procedures for the owner or operator to notify the APCO when an engine is found to be operating outside the acceptable range for control equipment parameters, engine operating parameters, and engine exhaust NO_X, CO, VOC, or oxygen concentrations.

The applicant has proposed that the alternate monitoring program will ensure compliance with these two sections of the Rule. Therefore, the following condition will be listed on the proposed ATC permits to ensure compliance:

- If either the NOx or CO concentrations corrected to 15% O2, as measured by the portable analyzer, exceed the allowable emission concentration, the permittee shall return the emissions to within the acceptable range as soon as possible, but no longer than 8 hours after detection. If the portable analyzer readings continue to exceed the allowable emissions concentration after 8 hours, the permittee shall notify the District within the following 1 hour, and conduct a certified source test within 60 days of the first exceedance. In lieu of conducting a source test, the permittee may stipulate a violation has occurred, subject to enforcement action. The permittee must then correct the violation, show compliance has been re-established, and resume monitoring procedures. If the deviations are the result of a qualifying breakdown condition pursuant to Rule 1100, the permittee may fully comply with Rule 1100 in lieu of performing the notification and testing required by this condition. During the BACT determination period for NOx, NOx emissions neither exceeding 0.60 g-NOx/bhp-hr nor

65 ppmv @ 15% O2 are not subject to the requirements contained in this condition to source test or stipulate that an emissions violation has occurred. [District Rules 2201 and 4702]

Section 6.5.6 specifies procedures for preventive and corrective maintenance performed for the purpose of maintaining an engine in proper operating condition. The applicant has proposed that the engines will be operated and maintained per the manufacturer's specifications.

Therefore, the following conditions will be listed on the proposed ATC permits:

- {3202} This engine shall be operated and maintained in proper operating condition per the manufacturer's requirements as specified on the Inspection and Monitoring (I&M) plan submitted to the District. [District Rule 4702]
- {3203} This engine shall be operated within the ranges that the source testing has shown result in pollution concentrations within the emissions limits as specified on this permit. [District Rule 4702]

Section 6.5.7 specifies procedures and a schedule for using a portable NO_X analyzer to take NO_X emission readings pursuant to Section 5.6.9. The applicant has proposed that the alternate monitoring program will ensure compliance with this section of the Rule. Therefore, the following previously proposed condition will be listed on the proposed ATC permits:

- {3787} All alternate monitoring parameter emission readings shall be taken with the unit operating either at conditions representative of normal operations or conditions specified in the permit-to-operate. The analyzer shall be calibrated, maintained, and operated in accordance with the manufacturer's specifications and recommendations or a protocol approved by the APCO. Emission readings taken shall be averaged over a 15 consecutive-minute period by either taking a cumulative 15 consecutive-minute sample reading or by taking at least five (5) readings, evenly spaced out over the 15 consecutive-minute period. [District Rule 4702]

Section 6.5.8 specifies procedures for collecting and recording required data and other information in a form approved by the APCO including, but not limited to, data collected through the I&M plan and the monitoring systems described in Sections 5.6.1 and 5.6.2. Data collected through the I&M plan shall have retrieval capabilities as approved by the APCO. The alternate monitoring program will ensure compliance with this Section of the Rule. Therefore, the following previously proposed condition will be listed on the proposed ATC permits to ensure compliance:

- The permittee shall maintain records of: (1) the date and time of NOx, CO, and O2 measurements, (2) the O2 concentration in percent and the measured NOx and CO concentrations corrected to 15% O2, (3) make and model of exhaust gas analyzer, (4) exhaust gas analyzer calibration records, and (5) a description of any corrective action taken to maintain the emissions within the acceptable range. [District Rules 2201 and 4702]

Section 6.5.9 specifies procedures for revising the I&M plan. The I&M plan shall be updated to reflect any change in operation. The I&M plan shall be updated prior to any

planned change in operation. An engine owner that changes significant I&M plan elements must notify the District no later than seven days after the change and must submit an updated I&M plan to the APCO no later than 14 days after the change for approval. The date and time of the change to the I&M plan shall be recorded in the engine operating log. For new engines and modifications to existing engines, the I&M plan shall be submitted to and approved by the APCO prior to issuance of the Permit-to-Operate. The owner of an engine may request a change to the I&M plan at any time. The applicant has proposed that they will modify the I&M plan per this section of the Rule.

Therefore, the following condition will be listed on the proposed ATC permits to ensure compliance:

- {3212} The permittee shall update the I&M plan for this engine prior to any planned change in operation. The permittee must notify the District no later than seven days after changing the I&M plan and must submit an updated I&M plan to the APCO for approval no later than 14 days after the change. The date and time of the change to the I&M plan shall be recorded in the engine's operating log. For modifications, the revised I&M plan shall be submitted to and approved by the APCO prior to issuance of the Permit to Operate. The permittee may request a change to the I&M plan at any time. [District Rule 4702]

Conclusion

As shown above, the proposed non-agricultural, digester gas-fired, rich burn, IC engines will satisfy all the requirements of Rule 4702. Therefore, the engines will be in compliance as of the date of initial operation and no further discussion is required.

Rule 4801 – Sulfur Compounds

The purpose of this rule is to limit the emissions of sulfur compounds. The limit is that sulfur compound emissions (as SO_2) shall not exceed 0.2% by volume. Using the ideal gas equation, the sulfur compound emissions are calculated as follows:

Volume of SO_X as (SO_2) = (n x R x T) ÷ P
Where:

n = moles SO_X
T (standard temperature) = 60 °F or 520 °R
R (universal gas constant) = $\frac{10.73\,\text{psi}\cdot\text{ft}^3}{\text{lb}\cdot\text{mol}\cdot{}^\circ\text{R}}$

To demonstrate compliance with the sulfur compound emission limit of Rule 4801, the maximum sulfur compound emissions from the flare and engines will be calculated using the maximum sulfur content allowed for the digester gas during commissioning of the sulfur removal system, which is 4,000 ppmv (equivalent to 1.125 lb-SO_X/MMBtu).

$$1.125 \quad \frac{1\,lb\cdot SO_2}{1\,MMBtu}\times\frac{1\,MMBtu}{9{,}100\,scf_{exhaust}}\times\frac{1\,lb\cdot mol}{64\,lb\cdot SO_2}\times\frac{10.73\,psi\cdot ft^3}{lb\cdot mol\cdot{}^\circ R}\times\frac{520^\circ R}{14.7\,psi}\times 1{,}000{,}000\,ppm = \quad 733.2 \quad \text{ppmv}$$

Since 733.2 ppmv is ≤ 2000 ppmv, the proposed flare and IC engines are expected to comply with Rule 4801. The following conditions will be placed on the ATC permit to ensure compliance:

Plug Flow Digester System with Backup Flare (S-7831-1-0)

- During commissioning of the sulfur removal system, the sulfur content of the digester gas combusted in this unit shall not exceed 4,000 ppmv during the first 30 days of commissioning, shall not exceed 2,500 ppmv during the next 15 days of commissioning, and shall not exceed 1,000 ppmv during any remaining days of the commissioning period. [District Rules 2201 and 4801]
- The sulfur content of the digester gas combusted in this flare shall not exceed 50 ppmv as H2S except as provided below. [District Rules 2201 and 4801]
- The applicant has requested to install an experimental sulfur removal system. A six-month test period will be allowed for the experimental sulfur removal system after startup. The six-month test period shall begin with commencement of the commissioning period for the sulfur removal system and any time required for commissioning of the sulfur removal system shall be counted in the six-month test period. During the test period a digester gas sulfur content greater than 50 ppmv but not exceeding 200 ppmv will not constitute a violation of the permit provided that the sulfur removal system is operated to minimize the sulfur content to the maximum extent feasible. [District Rule 2201]

Digester Gas-Fired IC Engines (S-7831-2-0 & -3-0)

- During commissioning of the sulfur removal system, the sulfur content of the digester gas combusted in this unit shall not exceed 4,000 ppmv during the first 30 days of commissioning, shall not exceed 2,500 ppmv during the next 15 days of commissioning, and shall not exceed 1,000 ppmv during any remaining days of the commissioning period. [District Rules 2201 and 4801]
- The sulfur content of the digester gas used as fuel in this engine shall not exceed 50 ppmv as H2S except as provided below. [District Rules 2201 and 4801]
- The applicant has requested to install an experimental sulfur removal system. A six-month test period will be allowed for the experimental sulfur removal system after startup. The six-month test period shall begin with commencement of the commissioning period for the sulfur removal system and any time required for commissioning of the sulfur removal system shall be counted in the six-month test period. During the test period a digester gas sulfur content greater than 50 ppmv but not exceeding 200 ppmv will not constitute a violation of the permit provided that the sulfur removal system is operated to minimize the sulfur content to the maximum extent feasible. [District Rule 2201]

40 CFR 60 Subpart JJJJ - Standards of Performance for Stationary Spark Ignition Internal Combustion Engines

This rule incorporates the New Source Performance Standards (NSPS) from Part 60, Chapter 1, Title 40, Code of Federal Regulations (CFR); and applies to all new sources of air pollution and modifications of existing sources of air pollution listed in 40 CFR Part 60.

The purpose of 40 CFR 60 Subpart JJJJ is to establish New Source Performance Standards to reduce emissions of NO_X, SO_X, PM, CO, and VOC from new stationary spark ignition (SI) internal combustion (IC) engines.

Pursuant to Section 60.4230, owners and operators of a stationary SI IC engine with a maximum engine power greater than or equal to 500 HP (except lean burn engines with a maximum engine power greater than or equal to 500 HP and less than 1,350 HP) that commence modification or reconstruction after June 12, 2006 must comply with the provisions of this subpart. The proposed engines are 675 bhp SI ICEs that will be constructed after June 12, 2006; therefore, the engines are subject to this subpart.

Pursuant to Section 60.4233(f)(5), owners and operators of a stationary landfill or digester gas-fired SI ICE with a maximum engine power greater than or equal to 75 kW (100 bhp) that commence modification or reconstruction after June 12, 2006 must comply with the emission standards in 40 CFR 60, Subpart JJJJ, Table 1 for their stationary SI ICE. The proposed engines are 675 bhp SI ICEs that will be constructed after June 12, 2006; therefore, the engines are subject to the emission standards in Table 1 of this subpart.

The requirements contained in 40 CFR 60, Subpart JJJJ, Table 1 for landfill and digester gas-fired engines are summarized in the table below:

Engine Type and Fuel	Maximum Engine Power	Manufacture Date	Emission Standards[a]					
			g/HP-hr			ppmvd at 15% O_2		
			NO_X	CO	VOC[b]	NO_X	CO	VOC[b]
Landfill/Digester Gas (except lean burn 500 ≥ bhp <1,350)	bhp < 500	7/1/2008	3.0	5.0	1.0	220	610	80
		1/1/2011	2.0	5.0	1.0	150	610	80
	bhp ≥ 500	7/1/2007	3.0	5.0	1.0	220	610	80
		7/1/2010	2.0	5.0	1.0	150	610	80
Landfill/Digester Gas Lean Burn	500 ≥ bhp < 1,350	1/1/2008	3.0	5.0	1.0	220	610	80
		7/1/2010	2.0	5.0	1.0	150	610	80

[a] Owners and operators of stationary non-certified SI engines may choose to comply with the emission standards in units of either g/HP-hr or ppmvd at 15 percent O2.
[b] VOC emission concentrations reported as propane; For purposes of this subpart, when calculating emissions of volatile organic compounds, emissions of formaldehyde should not be included.

The proposed engines will satisfy the applicable standards of this subpart and the following previously proposed conditions will ensure compliance:

- Emissions from this IC engine shall not exceed any of the following limits (except as provided in conditions 23-26 below): 0.15 g-NOx/bhp-hr (NOx referenced as NO2), 2.20 g-CO/bhp-hr, 0.20 g-VOC/bhp-hr (VOC referenced as methane), 0.07 g-PM10/bhp-hr. [District Rules 2201 and 4702]
- The District shall establish the final BACT limit for NOx, including any applicable averaging periods, and revise the applicable limit contained in the permit within 60 days of the successful completion of the BACT determination period or receipt of the report

from the permittee. Within 30 days of receipt of the District's determination, the permittee shall submit an Authority to Construct application to incorporate the revised emissions limit(s). In no case shall the final BACT NOx emission limitation be higher than 0.60 g-NOx/bhp-hr. The engine shall be allowed to continue to operate after the BACT evaluation period has ended and before the new Authority to Construct permit has been issued provided that NOx (as NO2) emissions from the engine do not exceed either of the following limits: 1) 0.60 g-NOx/bhp-hr and 2) 65 ppmv NOx @ 15% O2. [District Rules 2201 and 4702]

Pursuant to Section 60.4234, an owner or operator of a stationary SI internal combustion engine must operate and maintain the engines such that they achieve the emission standards as required in 40 CFR 60.4233 over the entire life of the engine.

District Rule 4702 and the ATC permits for the proposed engines require adequate periodic monitoring to ensure that the applicable emission limits contained in the permit are met. Therefore, the requirements of this section will be satisfied.

Pursuant to Section 60.4243, an owner or operator of a non-certified stationary SI internal combustion engine rated greater than 500 bhp must keep a maintenance plan and records of conducted maintenance. Additionally an initial performance source test must be conducted and subsequent performance tests must be conducted every 8,760 hours or 3-years, whichever comes first. The operator of the proposed engines is also required to maintain records of maintenance and periodically source test to demonstrate compliance with District Rule 4702; therefore, the following previously listed conditions ensure compliance:

- The permittee shall maintain an engine operating log to demonstrate compliance. The engine operating log shall include, on a monthly basis, the following information: the total hours of operation, type and quantity of fuel used, results of fuel composition monitoring and analysis, maintenance and modifications performed, monitoring data, compliance source test results, and any other information necessary to demonstrate compliance. Quantity of fuel used shall be recorded in standard cubic feet or standard cubic meters using a non-resettable, totalizing mass or volumetric fuel flow meter or other APCO approved-device. [District Rule 4702 and 40 CFR 60, Subpart JJJJ]
- Official source testing to demonstrate compliance with NOx, CO, and VOC emissions limits from this unit shall be conducted within 365 days of initial start-up using the methods specified in this permit. [District Rules 1081, 2201, and 4702 and 40 CFR 60, Subpart JJJJ]
- Source testing to measure NOx, CO, and VOC emissions from this unit shall be conducted at least once every 8,760 hours of operation or 24 months, whichever comes first. [District Rules 1081, 2201, and 4702 and 40 CFR 60, Subpart JJJJ]

Pursuant to Section 60.4243(g) air-to-fuel ratio controllers used with the operation of three-way catalysts/non-selective catalytic reduction must be maintained and operated appropriately in order to ensure proper operation of the engine and control device to minimize emissions at all times. The following condition will be placed on the permits to ensure compliance:

- Air-to-fuel ratio controller(s) shall be maintained and operated appropriately in order to ensure proper operation of the engine and control device to minimize emissions at all times. [District Rule 2201 and 40 CFR 60, Subpart JJJJ]

Section 60.4244 requires that three separate test runs be conducted for each performance test and that each test run must be conducted within 10 percent of 100 percent peak (or the highest achievable) load and last at least 1 hour. The following previously proposed condition will be placed on the permits to ensure compliance:

- For official emissions source testing, the arithmetic average of three 60-consecutive-minute test runs shall apply. Each test run shall be conducted within 10 percent of 100 percent peak (or the highest achievable) load. If two of three runs are above an applicable limit, the test cannot be used to demonstrate compliance with an applicable limit. VOC emissions shall be reported as both methane and as propane. VOC, NOx, and CO concentrations shall be reported in ppmv, corrected to 15% oxygen. [District Rule 4702 and 40 CFR 60, Subpart JJJJ]

Section 60.4245(c) requires owners and operators of stationary SI ICE greater than or equal to 500 bhp that have not been certified by an engine manufacturer to meet the emission standards in Section 60.4231 to submit an initial notification as required in Section 60.7(a)(1). The notification must include the following:

1) Name and address of the owner or operator;
2) The address of the affected source;
3) Engine information including make, model, engine family, serial number, model year, maximum engine power, and engine displacement;
4) Emission control equipment; and
5) Fuel used.

The following condition will be placed on the ATC permits to ensure compliance:

- Notification of the date construction of this engine commenced shall be submitted to the District and EPA and shall be postmarked no later than 30 days after such date as construction commenced. The notification shall contain the following information: 1) Name and address of the owner or operator; 2) The address of the affected source; 3) Engine information including make, model, engine family, serial number, model year, maximum engine power, and engine displacement; 4) Emission control equipment; and 5) Fuel used. Notification of construction and copies of source test results shall be submitted to EPA at the following address: Director, Air Division, U.S. Environmental Protection Agency, 75 Hawthorne Street, San Francisco, CA 94105. [40 CFR 60, Subpart JJJJ]

Section 60.4245(d) requires owners and operators of stationary SI ICE that are subject to performance testing must submit a copy of each performance test as conducted in §60.4244 within 60 days after the test has been completed. The following previously proposed condition will be placed on the permits to ensure compliance:

- The results of each source test shall be submitted to the District and EPA within 60 days after completion of the source test. [District Rule 1081 and 40 CFR 60, Subpart JJJJ]

Table 2 of 40 CFR 60, Subpart JJJJ specifies methods and procedures for performance testing to demonstrate compliance with the applicable emission limits. The following previously proposed condition will be placed on the permits to ensure compliance:

- The following methods shall be used for official source testing: NOx (ppmv) - EPA Method 7E, CO (ppmv) - EPA Method 10, VOC (ppmv) - EPA Method 25A or 25B, stack gas oxygen - EPA Method 3 or 3A, stack gas velocity - EPA Method 2 or EPA Method 19, stack gas moisture content - EPA Method 4. Alternative test methods as approved by EPA and the

District may also be used to address the source testing requirements of this permit. [District Rules 1081 and 4702 and 40 CFR 60, Subpart JJJJ]

40 CFR 63 Subpart ZZZZ - National Emission Standards for Hazardous Air Pollutants for Stationary Internal Combustion Engines

40 CFR 63 Subpart ZZZZ establishes national emission limitations and operating limitations for hazardous air pollutants (HAPs) emitted from stationary reciprocating internal combustion engines (RICE) located at major and area sources of HAP emissions. A major source of HAP emissions is a facility that has the potential to emit any single HAP at a rate of 10 tons/year or greater or any combinations of HAPs at a rate of 25 tons/year or greater. An area source of HAPs is a facility that is not a major source of HAPs.

As discussed above, the proposed digester gas facility will be located at an existing dairy operation. The District has determined that the dairy and proposed digester gas-fired units are considered the same stationary source. Therefore, the emissions from the existing dairy and the proposed digester gas-fired flare and IC engines will be combined when determining if the stationary source will constitute a major source of HAP emissions.

The total HAP emissions for the dairy was calculated based results from emission studies performed at agricultural facilities. The total HAP emissions for the new digester gas fired flare and IC engines were calculated based on toxic emission factors for digester gas combustion provided by the Technical Services Division of the SJVAPCD for combustion of digester gas in IC engines (see Appendix G). The total HAP emissions from this stationary source are less than the Major HAP source thresholds; therefore, this facility is an Area Source as defined in this subpart. Pursuant to Section 63.6590(c), an affected source that is a new or reconstructed stationary Reciprocating Internal Combustion Engine (RICE) located at an area source must meet the requirements of 40 CFR 63, Subpart ZZZZ by meeting the requirements of 40 CFR 60, Subpart IIII, for compression ignition engines or 40 CFR 60, Subpart JJJJ, for spark ignition engines and no further requirements apply for such engines under this part. As shown above, the proposed spark-ignited engines will comply with 40 CFR 60, Subpart JJJJ; therefore, the engines are expected to comply with this 40 CFR 63, Subpart ZZZZ.

California Health & Safety Code 42301.6 (School Notice)

The District has verified that this site is not located within 1,000 feet of a school. Therefore, pursuant to California Health and Safety Code 42301.6, a school notice is not required.

California Environmental Quality Act (CEQA)

The California Environmental Quality Act (CEQA) requires each public agency to adopt objectives, criteria, and specific procedures consistent with CEQA Statutes and the CEQA Guidelines for administering its responsibilities under CEQA, including the orderly evaluation of projects and preparation of environmental documents. The San Joaquin Valley Unified Air Pollution Control District (District) adopted its *Environmental Review Guidelines* (ERG) in 2001. The basic purposes of CEQA are to:

- Inform governmental decision-makers and the public about the potential, significant environmental effects of proposed activities.

- Identify the ways that environmental damage can be avoided or significantly reduced.
- Prevent significant, avoidable damage to the environment by requiring changes in projects through the use of alternatives or mitigation measures when the governmental agency finds the changes to be feasible.
- Disclose to the public the reasons why a governmental agency approved the project in the manner the agency chose if significant environmental effects are involved.

Greenhouse Gas (GHG) Significance Determination

It is determined that no other agency has or will prepare an environmental review document for the project. Thus, the District is the Lead Agency for this project. The proposed project is for construction of a renewable energy facility at an existing dairy facility. The proposed renewable energy facility will combust dairy digester gas in I.C. engines to produce electricity. The proposed project will involve diverting manure from existing open ponds/lagoons at the dairy to the enclosed plug flow digester, which will result in the capture of much of the methane that is currently released into the atmosphere from the open ponds/lagoons at the dairy. Combustion of the dairy digester gas at the proposed renewable facility plant will oxidize the methane in the gas to carbon dioxide and water vapor. Because methane has a global warming potential at least 21 times that of carbon dioxide, combustion of the methane from the plug flow digester will result in a large net decrease in the global warming potential emitted from the dairy when compared to current levels. Therefore, the District has determined that the project would not result in an increase in project specific greenhouse gas emissions. The District therefore concludes that the project would have a less than cumulatively significant impact on global climate change.

District CEQA Findings

The District is the Lead Agency for this project because there is no other agency with broader statutory authority over this project. The District performed an Engineering Evaluation (this document) for the proposed project and determined that the activity will occur at an existing facility and the project involves negligible expansion of the existing use. Furthermore, the District determined that the activity will not have a significant effect on the environment. The District finds that the activity is categorically exempt from the provisions of CEQA pursuant to CEQA Guideline § 15031 (Existing Facilities), and finds that the project is exempt per the general rule that CEQA applies only to projects which have the potential for causing a significant effect on the environment (CEQA Guidelines §15061(b)(3)).

IX. Recommendation

Compliance with all applicable rules and regulations is expected. Issue Authority to Construct permits S-5834-3-2 and S-7831-1-0, -2-0, & -3-0 subject to the permit conditions on the attached draft Authority to Construct permits in Appendix H.

X. Billing Information

Annual Permit Fees			
Permit Number	Fee Schedule	Fee Description	Annual Fee
S-5834-3-2	3020-06	Liquid Manure Handling System	$105.00
S-7831-1-0	3020-02-G	9.0 MMBtu/hr Flare	$815.00
S-7831-2-0	3020-10-D	675 bhp IC engine	$479.00
S-7831-3-0	3020-10-D	675 bhp IC engine	$479.00

Appendices

A: Current Permits for Liquid Manure Handling System (Permit S-5834-3-0 and ATC S-5834-3-1)
B: Facility Location Map (Permit S-5834-3-0 and ATC S-5834-3-1)
C: Basic Description of the Equipment and Operation of the Proposed Andgar, Plug Flow, Anaerobic Digester System
D: Current BACT Guideline and Proposed Revised BACT Guideline for Digester Gas-Fired Flares and BACT Analysis for the Proposed Digester Gas-Fired Backup Flare (S-7831-1-0)
E: BACT Analysis for the Proposed Digester Gas-Fired Lean Burn IC Engines (S-7831-2-0 & -3-0)
F: Summary of Health Risk Assessment (HRA) and Ambient Air Quality Analysis (AAQA)
G: Total Hazardous Air Pollutant (HAP) Emissions from the Facility
H: Draft ATCs (S-5834-3-2 and S-7831-1-0, -2-0, & -3-0)

APPENDIX A

Current Permits for Liquid Manure Handling System (S-5834-3-0 and ATC S-5834-3-1)

San Joaquin Valley
Air Pollution Control District

PERMIT UNIT: S-5834-3-0 **EXPIRATION DATE:** 12/31/2009

EQUIPMENT DESCRIPTION:
LIQUID MANURE HANDLING SYSTEM CONSISTING OF A MECHANICAL SEPARATOR AND 4 STORAGE POND(S)(25' X 25' X 20', 120' X 750' X 20', 180' X 1080' X 20', 180' X 320' X 20'). MANURE IS LAND APPLIED THROUGH FLOOD IRRIGATION.

PERMIT UNIT REQUIREMENTS

1. Upon presentation of appropriate credentials, a permittee shall allow an authorized representative of the District to enter the permittee's premises where a permitted source is located or emissions related activity is conducted, or where records must be kept under condition of the permit. [District Rule 1070]
2. Upon presentation of appropriate credentials, a permittee shall allow an authorized representative of the District to have access to and copy, at reasonable times, any records that must be kept under the conditions of the permit. [District Rule 1070]
3. The equipment and operations of facility S-5834 and S-7831 are considered the same stationary source for the purposes of determining applicability and requirements of Rule 2201, New and Modified Stationary Source Review. [District Rule 2201]

San Joaquin Valley
AIR POLLUTION CONTROL DISTRICT

AUTHORITY TO CONSTRUCT

PERMIT NO: S-5834-3-1 **ISSUANCE DATE:** 04/20/2007

LEGAL OWNER OR OPERATOR: MOONLIGHT DAIRY
MAILING ADDRESS: 5061 AVENUE 280
VISALIA, CA 93277

LOCATION: 5061 AVENUE 280
VISALIA, CA 93277

EQUIPMENT DESCRIPTION:
MODIFICATION OF LIQUID MANURE HANDLING SYSTEM CONSISTING OF A MECHANICAL SEPARATOR AND 4 STORAGE POND(S)(25' X 25' X 20', 120' X 750' X 20', 180' X 1080' X 20', 180' X 320' X 20'). MANURE IS LAND APPLIED THROUGH FLOOD IRRIGATION: ADD MITIGATION MEASURES TO COMPLY WITH RULE 4570

CONDITIONS

1. Upon presentation of appropriate credentials, a permittee shall allow an authorized representative of the District to enter the permittee's premises where a permitted source is located or emissions related activity is conducted, or where records must be kept under condition of the permit. [District Rule 1070]
2. Upon presentation of appropriate credentials, a permittee shall allow an authorized representative of the District to have access to and copy, at reasonable times, any records that must be kept under the conditions of the permit. [District Rule 1070]
3. Permittee shall implement and maintain all the VOC Mitigation Measures contained in this permit, on and after 365 days of issuance of this ATC. [District Rule 4570]
4. If a licensed veterinarian or a certified nutritionist determines that any VOC mitigation measure will be required to be suspended as a detriment to animal health, the Permittee must notify the District in writing within forty-eight (48) hours of the determination including the duration and the specific health condition requiring the mitigation measure to be suspended. If the situation is expected to exist longer than a thirty-day (30) period, the owner/operator shall submit a new emission mitigation plan designating a mitigation measure to be implemented in lieu of the suspended mitigation measure. [District Rule 4570]
5. Permittee shall remove solids from the waste system with a solid separator system, prior to the waste entering the lagoon. [District Rule 4570]

CONDITIONS CONTINUE ON NEXT PAGE

YOU MUST NOTIFY THE DISTRICT COMPLIANCE DIVISION AT (661) 326-6900 WHEN CONSTRUCTION IS COMPLETED AND PRIOR TO OPERATING THE EQUIPMENT OR MODIFICATIONS AUTHORIZED BY THIS AUTHORITY TO CONSTRUCT. This is NOT a PERMIT TO OPERATE. Approval or denial of a PERMIT TO OPERATE will be made after an inspection to verify that the equipment has been constructed in accordance with the approved plans, specifications and conditions of this Authority to Construct, and to determine if the equipment can be operated in compliance with all Rules and Regulations of the San Joaquin Valley Unified Air Pollution Control District. Unless construction has commenced pursuant to Rule 2050, this Authority to Construct shall expire and application shall be cancelled two years from the date of issuance. The applicant is responsible for complying with all laws, ordinances and regulations of all other governmental agencies which may pertain to the above equipment.

Seyed Sadredin, Executive Director / APCO

DAVID WARNER, Director of Permit Services
S-5834-3-1 : Apr 23 2007 1:30PM – MCDONOUD : Joint Inspection NOT Required

6. Permittee shall not allow liquid animal waste to stand in the fields for more than twenty-four (24) hours after irrigation. [District Rule 4570]
7. Permittee shall maintain records to demonstrate liquid animal waste will does not stand in the fields for more than twenty-four (24) hours after irrigation. [District Rule 4570]
8. All records shall be kept and maintained for a minimum of five (5) years and shall be made available to the APCO, ARB and EPA upon request. [District Rule 4570]
9. This permit does not authorize the violation of any conditions established for this facility (e.g. maximum number of animals or animal units, construction requirements, etc.) in the Conditional Use Permit (CUP), Special Use Permit (SUP), Site Approval, Site Plan Review (SPR), or other approval documents issued by a local, state, or federal agency. [District Rules 2070 and 2080]

APPENDIX B

Basic Description of the Equipment and Operation of the Proposed Andgar, Plug Flow, Anaerobic Digester System

ANDGAR™ corporation

GHD, Inc.
ENVIRONMENTAL SERVICES

Patented digester design

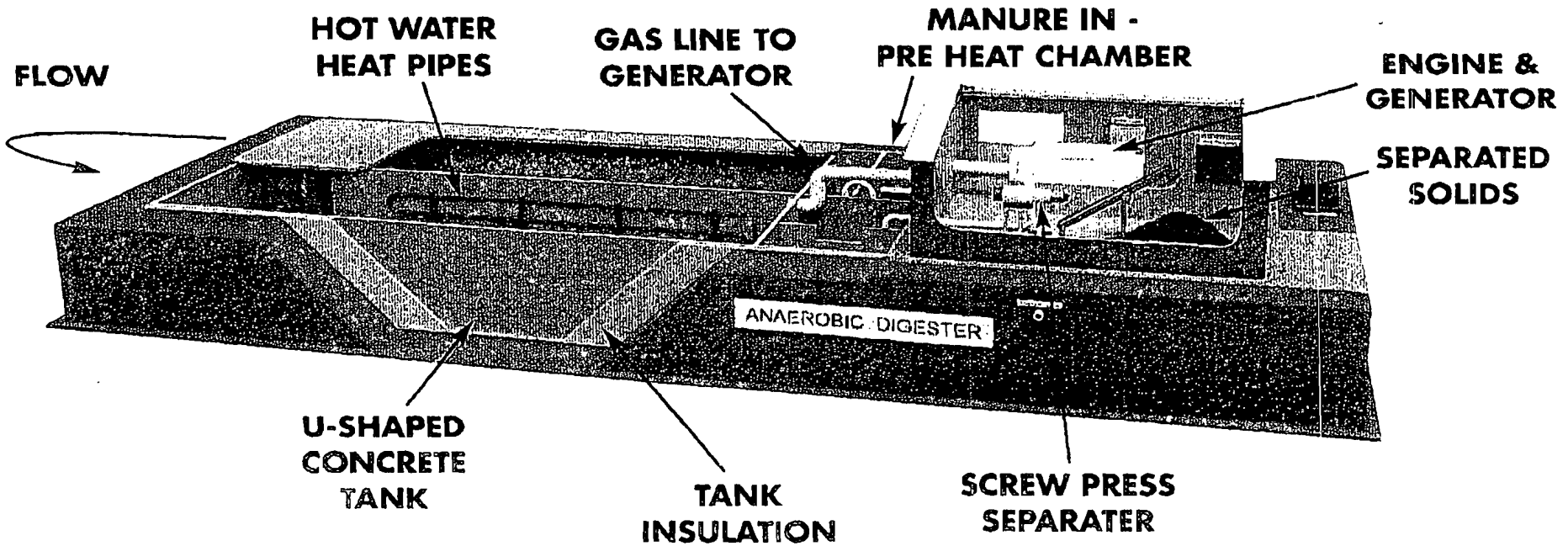

ANDGAR™ corporation

GHD, Inc.
ENVIRONMENTAL SERVICES

BASIC ANAEROBIC SYSTEM FLOW CHART

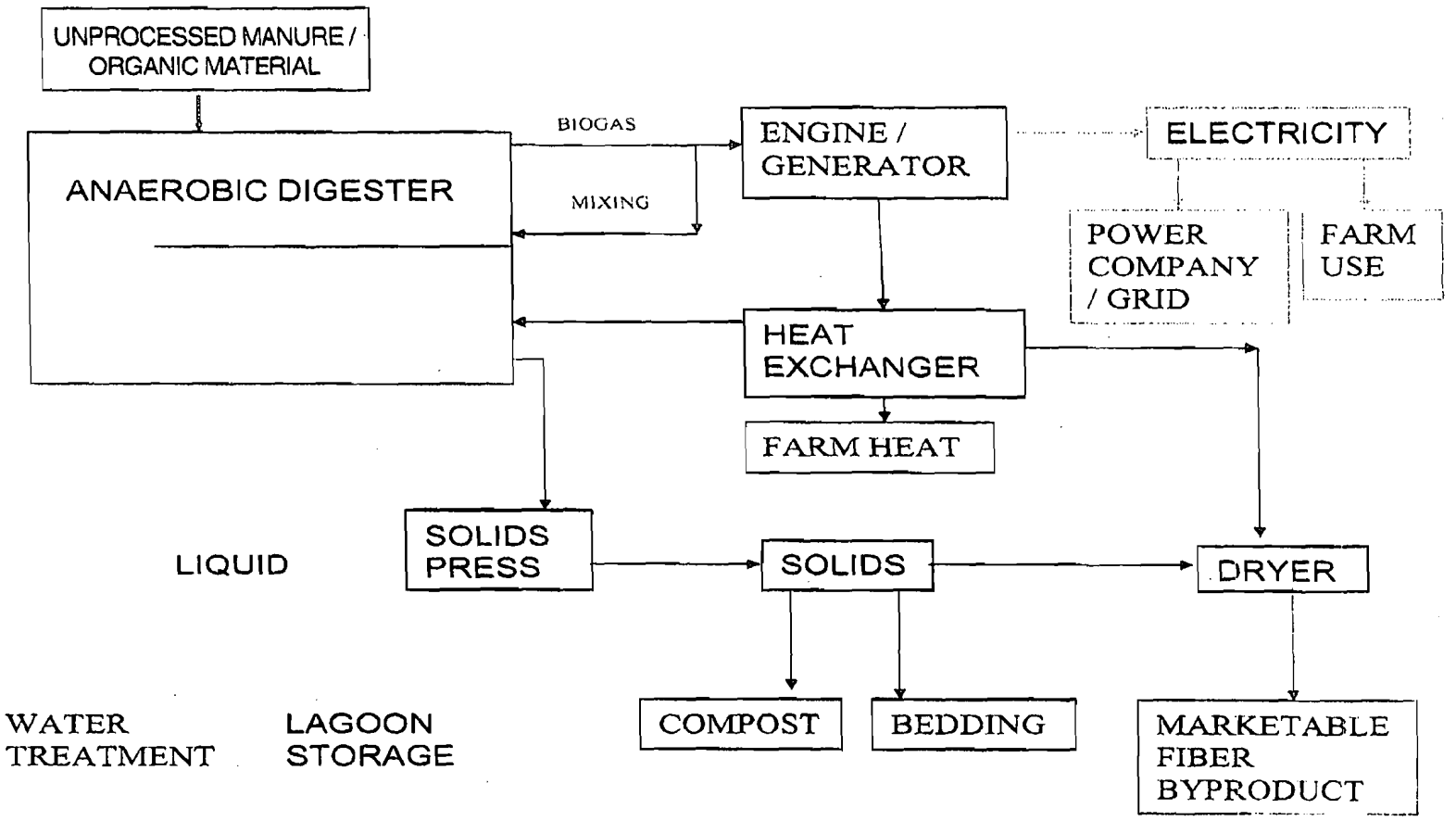

APPENDIX C

Location of Moonlight Dairy (Facility S-5834) and AgPower Visalia, LLC (Facility S-7831)

Bing Maps

5061 Ave 280, Visalia, CA 93277

Moonlight Dairy

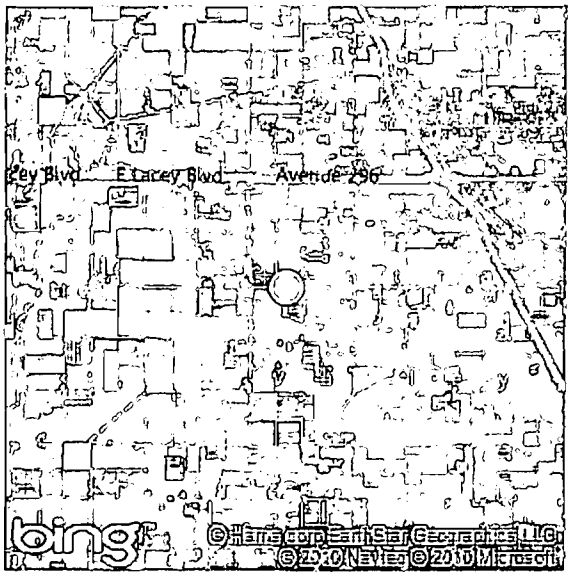

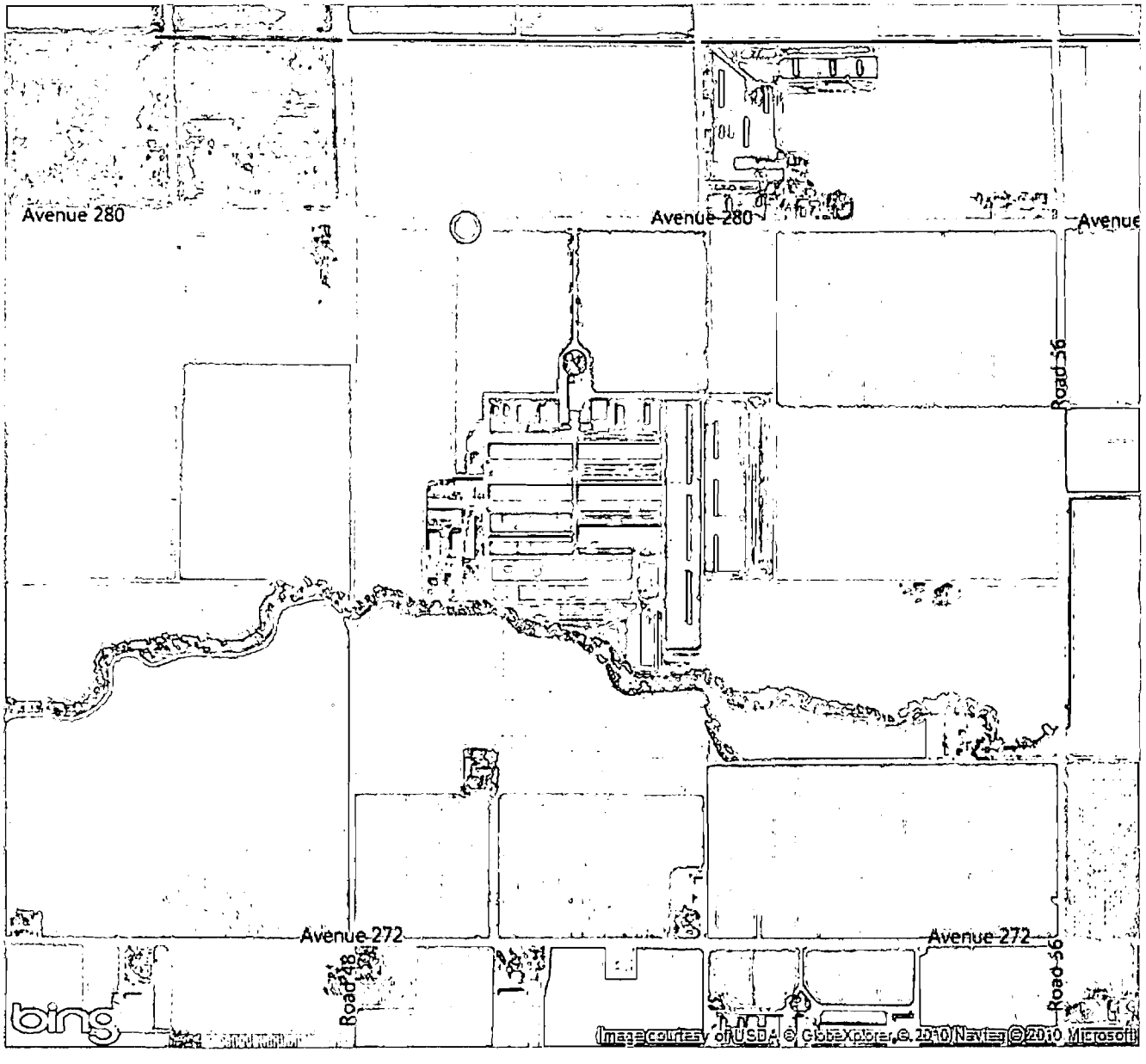

Regional Location
Tulare County

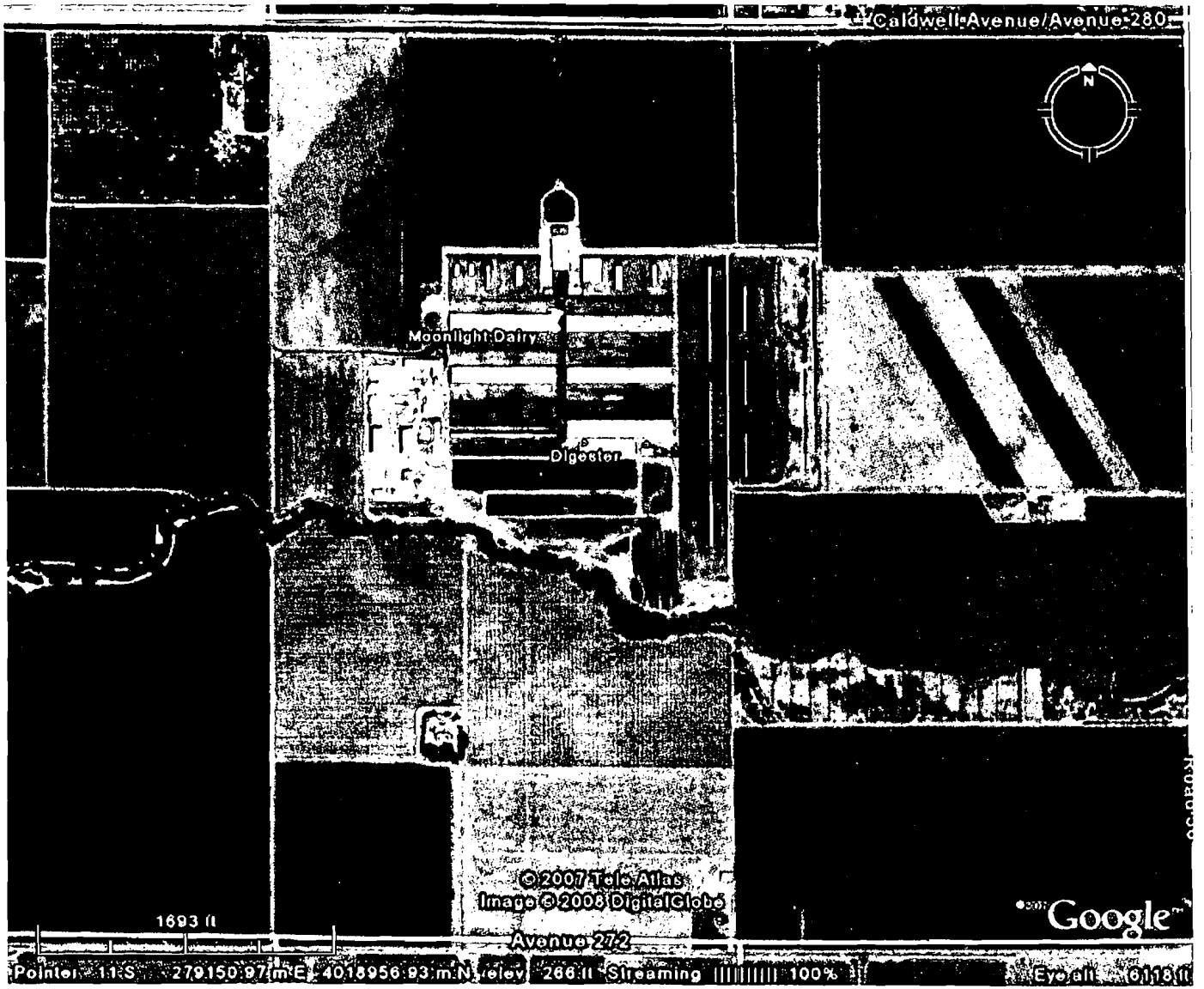

Michael Brandman Associates

Exhibit 1
Regional and Project Location Map

APPENDIX D

Current BACT Guideline and Proposed Revised BACT Guideline for Digester Gas-Fired Flares and BACT Analysis for the Proposed Digester Gas-Fired Backup Flare (S-7831-1-0)

Current BACT Guideline

Best Available Control Technology (BACT) Guideline 1.4.4

Last Update: 5/16/2006

Emissions Unit: Digester Gas-Fired Flare

Pollutant	Achieved in Practice or contained in SIP	Technologically Feasible	Alternate Basic Equipment
CO	Operating in accordance with the manufacturers' specifications in order to minimize CO emissions		
NO_X	Enclosed flare and NO_X emissions ≤ 0.06 lb/MMBtu	Ultra Low-NO_X flare with NO_X emissions ≤ 0.03 lb/MMBtu	
PM_{10}	Smokeless combustion and a LPG or natural gas fired pilot		
SO_X	LPG or natural gas fired pilot	1. Dry absorption of H_2S from the fuel gas 2. Wet absorption of H_2S from the fuel gas 3. Influent fuel H_2S reduction by addition of chemicals to the digester gas sludge 4. Water scrubbing of H_2S from the fuel gas	
VOC	Enclosed flare and VOC emissions ≤ 0.068 lb/MMBtu		

Proposed Revised BACT Guideline

Best Available Control Technology (BACT) Guideline 1.4.4

Updated: November 2010

Emissions Unit: Digester Gas-Fired Flare

Pollutant	Achieved in Practice or contained in SIP	Technologically Feasible	Alternate Basic Equipment
CO	Operating in accordance with the manufacturers' specifications in order to minimize CO emissions		
NO_X	Enclosed flare and NO_X emissions ≤ 0.06 lb/MMBtu	Ultra Low-NO_X flare with NO_X emissions ≤ 0.03 lb/MMBtu	
PM_{10}	Smokeless combustion and a LPG or natural gas fired pilot		
SO_X	Sulfur Content of digester gas not exceeding 50 ppmv	1. Dry absorption of H_2S from the fuel gas 2. Wet absorption of H_2S from the fuel gas 3. Influent fuel H_2S reduction by addition of chemicals to the digester gas sludge 4. Water scrubbing of H_2S from the fuel gas	
VOC	Enclosed flare and VOC emissions ≤ 0.068 lb/MMBtu		

BACT Analysis
Revision to BACT Guideline 1.4.4: Digester Gas-Fired Flare

I. Purpose of Revision of BACT Guideline 1.4.4

A considerable amount of information from multiple sources indicates that for a number of years SO_X emissions from various digester gas-fired operations have been controlled by limiting the sulfur content of the gas to 50 ppmv H_2S or less. Because this level of sulfur scrubbing has been required for several digester gas-fired units, reducing the sulfur content of digester gas to 50 ppmv or less will be required as Achieved in Practice BACT for digester gas-fired flares and BACT Guideline 1.4.4 will be updated to reflect this.

II. Proposal and Process Description

AgPower Visalia, LLC (District Facility S-7831) has requested Authority to Construct (ATC) permits to install an Andgar Corporation, mesophilic, plug-flow anaerobic digester system with an experimental air injection sulfur removal system, a digester gas-fired backup flare, and two 675 bhp Guascor digester gas-fired lean burn IC engines with hydrogen/syngas injection (S-7831-2 & -3) at the existing Moonlight Dairy operation (District Facility S-5834). The proposed equipment will be used to generate electricity from the gas produced by the digester. According to the applicant, the digester system will produce approximately 360,000 cubic feet of biogas per day. An experimental air injection sulfur removal system (or alternative scrubber) will be used to remove sulfur compounds from the digester gas and then the digester will be combusted in the proposed lean burn IC engines. The engines will be used to produce electricity for the dairy and for sale to Southern California Edison (SCE) or another utility. Some of the heat remaining in the exhaust of the engines will be recovered using a hot water heat pipe circulation system and used to heat the manure in the digesters to maintain mesophilic temperatures (80 - 100 °F). When all of the digester gas cannot be combusted in the engines, it will be combusted in the proposed backup flare (S-7831-1).

Because the backup flare will only operate when one or both of the engines are down, the maximum amount of biogas that can be combusted in the flare on an annual basis will be limited to 13.14 MMscf/yr (proposed by applicant and based on the flare combusting a maximum of 10% of the biogas produced by the digester).

III. Equipment Listing

S-7831-1-0: ANDGAR PLUG FLOW MESOPHILIC ANAEROBIC DIGESTER SYSTEM CONSISTING OF A PRE-DIGESTER SETTLING BASIN, AN IN-GROUND CONCRETE VESSEL (73' X 290 ' X 16'), ONE MECHANICAL SEPARATOR, AND ONE 9.0 MMBTU/HR ANDGAR-8" DIGESTER GAS-FIRED ENCLOSED BACKUP FLARE SERVED BY AN AIR INJECTION H2S REMOVAL SYSTEM (OR EQUIVALENT H2S REMOVAL SYSTEM)

IV. BACT Applicability

New emissions units – PE > 2.0 lb/day

New Emissions Unit BACT Applicability for S-7831-1-0				
Pollutant	PE2 for unit S-7831-1-0 (lb/day)	BACT Threshold (lb/day)	SSPE2 (lb/yr)	BACT Triggered?
NO_X	13.0	> 2.0	N/A	**Yes**
SO_X	140.7	> 2.0	N/A	**Yes**
PM_{10}	1.7	> 2.0	N/A	No
CO	79.9	> 2.0 and SSPE2 ≥ 200,000 lb/yr	29,638	No
VOC	1.1	> 2.0	N/A	No

* BACT is not required for CO from a new or modified emissions unit at a Stationary Source with an SSPE2 of less than 200,000 pounds per year of CO.

V. Top-Down BACT Analyses for the Digester Gas-Fired Flare

1. BACT Analysis for NO_X Emissions:

a. Step 1 - Identify all control technologies

The SJVUAPCD BACT Clearinghouse Guideline 1.4.4, 4th quarter 2010, identifies achieved in practice BACT for NO_X emissions from digester gas-fired flares as follows:

1) Enclosed flare and NO_X emissions less ≤ 0.06 lb/MMBtu

In addition, the SJVUAPCD BACT Clearinghouse guideline 1.4.4, 1st quarter 2010, identifies technologically feasible BACT for NO_X emissions from digester gas-fired flares as follows:

1) Ultra Low-NO_X flare with NO_X emissions ≤ 0.03 lb/MMBtu

There are no options listed in the SJVUAPCD BACT Clearinghouse as alternate basic equipment.

b. Step 2 - Eliminate technologically infeasible options

There are no technologically infeasible options to eliminate from step 1.

c. Step 3 - Rank remaining options by control effectiveness

1) Ultra Low-NO_X flare with NO_X emissions ≤ 0.03 lb/MMBtu
2) Enclosed flare and NO_X emissions less ≤ 0.06 lb/MMBtu

d. Step 4 - Cost Effectiveness Analysis

Pursuant to Section IX.D of District Policy APR 1305 – BACT Policy, a cost effectiveness analysis is required for the options that have not been determined to be achieved in practice. In accordance with the District's Revised BACT Cost Effectiveness Thresholds Memo (5/14/08), to determine the cost effectiveness of a particular technologically feasible control option, the amount of emissions resulting from this option will be quantified and compared to the District Standard Emissions allowed by the District Rule that is applicable to the particular unit. The emission reductions will be equal to the difference between the District Standard Emissions and the emissions resulting from the particular option being evaluated.

Option 1: Ultra Low-NO_X flare with NO_X emissions ≤ 0.03 lb/MMBtu

Capital Cost

The capital costs for John Zink Company Zule ultra low-NO_X flares and John Zink Company ZTOF standard enclosed flares were provided by the John Zink Company for a previous project. The capital cost was highly dependent on the gas flow rate. For the proposed 15,000 scf/hr (250 scfm) digester gas-fired backup flare, the capital cost provided for an ultra low-NO_X flare was $175,000. For the standard enclosed flare the capital cost for the proposed flare was $37,300.

The incremental capital cost for an ultra Low-NO_X flare will be based on the difference in cost of an ultra low-NO_X flare and a standard enclosed flare. The incremental capital cost for replacement of the standard flare proposed in this project with an ultra Low-NO_X flare is calculated as follows:

$175,000 - $37,300 = $137,700

Annualized Capital Cost

Pursuant to District Policy APR 1305, section X (11/09/99), the incremental capital cost for the purchase of the ultra Low-NO_X flare will be spread over the expected life of the system using the capital recovery equation. The expected life of the entire system will be estimated at 10 years. A 10% interest rate is assumed in the equation and the assumption will be made that the equipment has no salvage value at the end of the ten-year cycle.

$$A = [P \times i(I+1)^n]/[(I+1)^n-1]$$

Where: A = Annual Cost
P = Present Value
I = Interest Rate (10%)
N = Equipment Life (10 years)

$$A = [\$137{,}700 \times 0.1(1.1)^{10}]/[(1.1)^{10}-1]$$
$$= \mathbf{\$22{,}410/year}$$

Annual Operation and Maintenance Cost

The annual operation costs for John Zink Company Zule ultra low-NO_X flares and John Zink Company ZTOF standard enclosed flares were provided by the John Zink Company. The annual operation costs for the ultra low-NO_X flares were also highly dependent on the gas flow rate. For the proposed 13,750 scf/hr (229 scfm) digester gas-fired backup flare, the annual operation provided for an ultra low-NO_X flare was $20,000. The annual operation costs were $5,000 per year for each of the standard enclosed flares.

The incremental annual operation cost for an ultra Low-NO_X flare will be based on the difference in cost of an ultra low-NO_X flare and a standard enclosed flare. The incremental annual operation cost for replacement standard flare proposed in this project with an ultra Low-NO_X flare is calculated as follows:

$20,000/year - $5,000/year = $15,000/year

Total Annual Cost

The total annual cost is calculated as follows:

Total annual cost = $22,410/year + $15,000/year = **$37,410/year**

NO_X Emission Reductions:

NO_X Emission Factors:

Pursuant to the District's Revised BACT Cost Effectiveness Thresholds Memo (5/14/08), District Standard NO_X emissions will be based on the NO_X limit of District Rule 4311 – Flares. Pursuant to Section 5.7 of District Rule 4311, the proposed 8.3 MMBtu/hr digester gas-fired backup flare is subject to a NO_X emissions limit of 0.0952 lb-NO_X/MMBtu. This value will be utilized to calculate NO_X emission reductions.

District Standard NO_X Emission Factor = 0.0952 lb-NO_X/MMBtu (District Rule 4311, Section 5.7)

Ultra Low-NO_X flare NO_X Emission Factors = 0.03 lb/MMBtu

Annual Operation:

According to the applicant, the majority of biogas (90%) produced by the proposed digester system will be combusted in the proposed IC engines. The amount of gas that can be combusted in the proposed flare annually will be limited to no more than 13.14 MMscf/yr; therefore, this amount of gas will be used to calculate annual NO_X emission reductions.

District Standard NO_X Emissions:

= 13.14 MMscf/year x 600 MMBtu/MMscf x 0.0952 lb-NO_X/MMBtu
= 751 lb-NO_X/year

Ultra Low-NO_X Flare NO_X Emissions:

= 13.14 MMscf/year x 600 MMBtu/MMscf x 0.03 lb-NO_X/MMBtu
= 237 lb-NO_X/year

The amount of NO_X reductions is equal to 751 lb-NO_X/year – 237 lb-NO_X/year = 514 lb/year (0.26 ton/year).

Cost of NO_X Emission Reductions

Cost of reductions = (Total annualized costs) ÷ [(NO_X reduction) ÷ (2,000 lb/ton)]
= ($37,410/year) ÷ [(514 lb-$NO_X$/year) ÷ (2,000 lb/ton)]
= **$145,564/ton**

As shown above, the cost for an ultra low-NO_X flare would cause the cost of the NO_X reductions to be greater than the $24,500/ton cost effectiveness threshold of the District BACT policy. Therefore, this option is not cost effective and is being removed from consideration at this time.

Option 2: Enclosed flare and NO_X emissions less ≤ 0.06 lb/MMBtu

The applicant has proposed this option. Therefore, pursuant to the SJVUAPCD BACT policy, the cost effectiveness analysis is not required.

e. Step 5 - Select BACT

BACT for NO_X emissions from the proposed flare is an enclosed flare with NO_X emissions less ≤ 0.06 lb/MMBtu. The applicant has proposed an enclosed flare with NO_X emissions less ≤ 0.06 lb/MMBtu, which satisfies BACT for NO_X emissions from the flare.

2. BACT Analysis for SO_X Emissions:

a. Step 1 - Identify all control technologies

The SJVUAPCD BACT Clearinghouse Guideline 1.4.4, 4th quarter 2008, identifies achieved in practice BACT for SO_X emissions from digester gas-fired flares as follows:

1) LPG or natural gas-fired pilot

However, based on the information from recent projects and summarized in Section VI below, BACT Clearinghouse Guideline 1.4.4 will be updated to reflect that the more stringent requirement to reduce the sulfur content of digester gas to 50 ppmv or less is required as Achieved in Practice BACT for digester gas-fired units.

The SJVUAPCD BACT Clearinghouse guideline 1.4.4, 4th quarter 2008, identifies technologically feasible BACT for SO_X emissions from digester gas-fired flares as follows:

1) Dry absorption of H_2S from the fuel gas
2) Wet absorption of H_2S from the fuel gas
3) Influent fuel H_2S reduction by addition of chemicals to the digester gas sludge
4) Water scrubbing of H_2S from the fuel gas

There are no options listed in the SJVUAPCD BACT Clearinghouse as alternate basic equipment.

b. Step 2 - Eliminate technologically infeasible options

There are no technologically infeasible options to eliminate from step 1.

c. Step 3 - Rank remaining options by control effectiveness

The control efficiency of each of the options above is estimated and the controls are ranked below based on the control effectiveness.

1) Dry absorption of H_2S from the fuel gas (98-99% -Technologically Feasible)
2) Wet absorption of H_2S from the fuel gas (95-98% -Technologically Feasible)
3) Sulfur Content of fuel gas not exceeding 50 ppmv H_2S (90-98% - Achieved in Practice/Contained in SIP)
4) Influent fuel H_2S reduction by addition of chemicals to the digester (90% - Technologically Feasible)
5) Water scrubbing of H_2S from the fuel gas (80% -Technologically Feasible)

d. Step 4 - Cost Effectiveness Analysis

Dairy digester gas from a heated plug flow digester can have a sulfur content greater than 4,000 ppmv as H_2S. The applicant is proposing to use an experimental sulfur removal system or alternative scrubber approved by the District to reduce the sulfur content of the digester gas combusted in the flare to ≤ 50 ppmv. The applicant has chosen to utilize an alternative sulfur removal system that will reduce the sulfur content of the digester gas by up to 98.75%, which the is considered equivalent to the most effective options listed above; therefore, no cost analysis is required.

e. Step 5 - Select BACT

BACT for SO_X emissions from the proposed flare is a scrubber that reduces the sulfur compounds in the gas to 50 ppmv or less. The applicant has proposed an experimental sulfur removal system or alternative scrubber approved by the District to reduce the sulfur content of the digester gas combusted in the flare to ≤ 50 ppmv. Therefore, the BACT requirements for SO_X are satisfied.

VI. Determination of Achieved in Practice BACT for SO_X Emissions from Digester Gas-Fired Equipment

The information provided below demonstrates that reducing the sulfur/H_2S content of digester gas to 50 ppmv prior to combustion is considered achieved-in-practice BACT for SO_X emissions from digester gas-fired equipment in the San Joaquin Valley Air Basin.

Digesters & Digester Gas-Fired Equipment in the San Joaquin Valley with Sulfur/H_2S limits of 50 ppmv or less

The following permits for digester-fired equipment with Sulfur/H_2S limits of 50 ppmv or less were identified from the District's PAS database:

Flares

E&J Gallo Winery (Permit C-447-226-4)
Permit limit for sulfur content of gas: 50 ppmv H_2S
Estimated Maximum Inlet Concentration: 1.5 % (15,000 ppmv)
Scrubber: US Filter Thiopaq 2-Stage Caustic Scrubber with Biological Reactor
Estimated Removal Efficiency Control: 99.7%

Beef Packers (Permit C-3463-8-2)
Permit limit for sulfur content of gas: 22 ppmv H_2S
Estimated Maximum Inlet Concentration: 2,000 – 2,400 ppmv
Scrubber: Honeywell Exceed Iron Sponge
Estimated Removal Efficiency Control: 99%

Vintage Dairy (Permit C-5715-28-0)
Permit limit for sulfur content of gas: 50 ppmv H_2S
Estimated Maximum Inlet Concentration: 2,500 ppmv
Scrubber: Biological Trickling Filter
Estimated Removal Efficiency Control: 98%

Hilmar Cheese Company (Permit N-1275-23-5)
Permit limit for sulfur content of gas: 26 ppmv sulfur
Estimated Maximum Inlet Concentration: 2,600 ppmv
Scrubber: Ceilcote Packed Wet Scrubber
Estimated Removal Efficiency Control: 99%

Woodbridge Winery (Permit N-2321-651-0)
Permit limit for sulfur content of gas: 25 ppmv H_2S
Estimated Maximum Inlet Concentration: 500 ppmv
Scrubber: SulfaTreat
Estimated Removal Efficiency Control: 95%

Delano Growers Grape Products (Permits S-711-14-0)
Permit limit for sulfur content of gas: 11 ppmv H_2S
Estimated Maximum Inlet Concentration: unknown
Scrubber: SulfaTreat

North of River Sanitary District (Permit S-1316-9-0)
Permit limit for sulfur content of gas: 4.5 ppmv SO_X in exhaust ≈ 25 ppmv sulfur in digester gas
Estimated Maximum Inlet Concentration: unknown

(Note: This facility also includes three permit-exempt digester gas-fired microturbines)

Kern Sanitation Authority (Permit S-1943-6-0)
Permit limit for sulfur content of gas: 0.0035 lb-SOx/MMBtu ≈ 12.5 ppmv S in digester gas
Estimated Maximum Inlet Concentration: unknown

Bakersfield City Wastewater #2 (Permit S-2273-10-1)
Permit limit for sulfur content of gas: 10 ppmv sulfur
Estimated Maximum Inlet Concentration: 500 ppmv
Scrubber: Dry Scrubber
Estimated Removal Efficiency Control: 98%

Boilers

E&J Gallo Winery (Permits C-447-1-9)
Permit limit for sulfur content of gas: 50 ppmv sulfur
Estimated Maximum Inlet Concentration: 1.5 % (15,000 ppmv)
Scrubber: US Filter Thiopaq 2-Stage Caustic Scrubber with Biological Reactor
Estimated Removal Efficiency Control: 99.7%

Valley Fig Growers (Permits C-1326-6-2)
Permit limit for sulfur content of gas:
Boiler: 0.000275 lb-SOx/MMBtu ≈ 1 ppmv Sulfur
Microturbine: 0.0065 lb-SOx/MMBtu ≈ 23 ppmv Sulfur
Estimated Maximum Inlet Concentration: unknown
Scrubber: Iron Sponge

Beef Packers (Permit C-3463-7-2)
Permit limit for sulfur content of gas: 22 ppmv H_2S
Estimated Maximum Inlet Concentration: 2,000 – 2,400 ppmv
Scrubber: Honeywell Exceed Iron Sponge
Estimated Removal Efficiency Control: 99%

City of Modesto Public Works (Permit N-2338-9-0)
Permit limit for sulfur content of gas: 10 ppmv H_2S
Estimated Maximum Inlet Concentration: 1,000 ppmv
Scrubber: SulfaTreat
Estimated Removal Efficiency Control: 99%

Delano Growers Grape Products (Permits S-711-12-2)
Permit limit for sulfur content of gas: 11 ppmv H_2S
Estimated Maximum Inlet Concentration: unknown
Scrubber: SulfaTreat

North of River Sanitary District (Permit S-1316-8-1)
Permit limit for sulfur content of gas: 0.5 grains/100 scf ≈ 8 ppmv H_2S in digester gas
Estimated Maximum Inlet Concentration: unknown

(Note: This facility also includes three permit-exempt digester gas-fired microturbines)

Kern Sanitation Authority (Permit S-1943-5-0)
Permit limit for sulfur content of gas: 0.75 grains/100 scf ≈ 12 ppmv sulfur in digester gas
Estimated Maximum Inlet Concentration: unknown

Bakersfield City Wastewater #2 (Permit S-2273-6-1 & -7-1)
Permit limit for sulfur content of gas: 10 ppmv sulfur
Estimated Maximum Inlet Concentration: 500 ppmv
Scrubber: Dry Scrubber
Estimated Removal Efficiency Control: 98%

Engines

City of Manteca (Permit N-1049-8-1)
Permit limit for sulfur content of gas: 99% reduction ≈ 15 ppmv H_2S in digester gas
Estimated Maximum Inlet Concentration: 1,500 ppmv
Scrubber: SulfaTreat
Estimated Removal Efficiency Control: 99%

Woodbridge Winery (Permits N-2321-649-0 & 650-0)
Permit limit for sulfur content of gas: 25 ppmv H_2S
Estimated Maximum Inlet Concentration: 500 ppmv
Scrubber: SulfaTreat
Estimated Removal Efficiency Control: 95%

Bakersfield City Wastewater #2 (Permit S-2273-9-2)
Permit limit for sulfur content of gas: 10 ppmv sulfur
Estimated Maximum Inlet Concentration: 500 ppmv
Scrubber: Dry Scrubber
Estimated Removal Efficiency Control: 98%

ABEC Bidart – Stockdale LLC (Permit S-7658-1-0)
Permit limit for sulfur content of gas: 50 ppmv sulfur
Estimated Maximum Inlet Concentration: 2,500 ppmv
Scrubber: Iron Sponge
Estimated Removal Efficiency Control: 98%

Note: this ATC has not yet been implemented

ABEC Bidart – Old River LLC (Permit S-7767-1-0, -2-0, -3-0, -4-0, -5-0, -6-0, -7-0, -8-0, -9-0, -10-0, -11-0, & -12-0)
Permit limit for sulfur content of gas: 50 ppmv sulfur
Estimated Maximum Inlet Concentration: 2,500 ppmv

Scrubber: Iron Sponge
Estimated Removal Efficiency Control: 98%

Note: these ATCs have not yet been implemented

Dairy Digester Gas-Fired Equipment Outside the San Joaquin Valley that has H_2S reduced to 50 ppmv or less

Chino Basin Desalter Authority (South Coast Air District) – Two Dairy Digester Gas-Fired Engines used to Purify Groundwater (Permits 411147 & 411148)
Permit limit for sulfur content of gas: 40 ppmv H_2S averaged daily

(Note: SCAQMD Rule 431.1, which is the SIP, is the basis for the 40 ppmv H_2S BACT limits for the dairy digester gas-fired IC engines at the Chino Basin Desalter Authority (http://www.aqmd.gov/bact/388050_IEUA_Chino.doc. It is expected that most digester gas-fired units in the South Coast Air Basin will be subject to the same limit since most will also be subject SCAQMD Rule 431.1)

LA County Sanitation, Valencia Water Reclamation Plant (South Coast Air District) – Three Digester Gas-Fired Flares (Permits 229189)
Permit limit for sulfur content of gas: 40 ppmv H_2S averaged over 4 hours
Scrubber: Iron Sponge

New Hope View Farms in Homer, Courland County, New York – Dairy Digester Gas-Fired Microturbine
H_2S content of the dairy digester gas is scrubbed to 50 ppmv for the microturbine
Estimated Maximum Inlet Concentration: 1,500 – 2,500 ppmv
Scrubber: Iron Sponge
Estimated Removal Efficiency Control: 96.7 – 98%
(http://www.manuremanagement.cornell.edu/Docs/NHV_case%20study_revision%201.htm)

Applicable Rule in the California State Implementation Plan (SIP)

SCAQMD Rule 431.1– Sulfur Content of Gaseous Fuels (Amended June 12, 1998)

As mentioned above digester gas, including dairy digester gas, combusted as fuel in the South Coast Air District is subject to SCAQMD Rule 431.1. SCAQMD Rule 431.1 was approved for inclusion in the SIP on 12/3/1999.

Per Marty Kay of the SCAQMD, dairy digester gas used as fuel is subject to a sulfur content limit of no more than 40 ppmv as H_2S on a daily average based on Table 1 of SCAQMD Rule 431.1. Because this rule is included in the SIP, the limits in the rule are achieved in practice.

(http://yosemite.epa.gov/R9/r9sips.nsf/AgencyProvision/57456B9AF0772D228825698F0051C53A?OpenDocument)

Other District Rules of Relevance

District Rule 4320 – Advanced Emission Reduction Options for Boilers, Steam Generators, and Process Heater Greater than 5.0 MMBtu/hr (Adopted October 16, 2008) and Proposed Amendments to District Rule 4702 – Internal Combustion Engines (Board Hearing Date for Adoption of amendments is December 2010)

Because the San Joaquin Valley Air District is classified as non-attainment for the State PM standards and the Federal $PM_{2.5}$ standard and SO_X is an important precursor to secondary PM formation, the District's latest rule to reduce emissions from boilers, steam generators, and process heaters included requirements for the control of SO_X. These SO_X control requirements currently apply to several digester gas-fired boilers/steam generators. Pursuant to Section 5.4, digester gas-fired boilers will be required to limit the sulfur content of the gas to no more than 5 gr/100 scf (≈ 80 ppmv S). The proposed amendments to District Rule 4702 will incorporate these same requirements for engines that are fired on non-certified fuels, including digester gas. Although it is possible to install a post-exhaust SO_X scrubber with 95% control to comply with the rules, this is not the most likely compliance option for digester operators since it is generally more cost-effective to remove sulfur from the fuel gas prior to combustion rather than to remove SO_X from the exhaust gas and scrubbing the exhaust would likely result in greater waste disposal issues. Additionally, scrubbing the fuel gas rather than the exhaust has the added benefit of reducing maintenance costs by protecting equipment downstream from the formation of corrosive acid once the exhaust cools.

Although flares, engines, and boilers are not the exact same source, the digester gas combusted in any of them would result in the same amount of SO_X emitted for the amount of gas combusted and the digester gas used to fuel any of them could be scrubbed with the same equipment. Therefore, it is relevant that digester gas combusted in boilers and engines will be subject to a sulfur limit in prohibitory rules (≈ 80 ppmv S) that is comparable to the District's proposed BACT limit of 50 ppmv. Since BACT is intended to be the "most stringent emission limitation or control technique", it is reasonable that the District's proposed BACT limit for digester gas-fired units would be than the sulfur limits contained in the prohibitory rules.

Conclusion

Although it may be possible to locate additional information, the above information is sufficient to demonstrate that a sulfur limit of 50 ppmv in digester gas is achieved in practice and required as BACT for SO_X by District Rule 2201. Therefore, BACT Guideline 1.4.4 for digester gas-fired flares will be updated to reflect this. Additionally, reducing the sulfur content of the digester gas to 50 ppmv or less will also be considered Achieved in Practice BACT for other digester gas-fired units, such as boilers and IC engines.

APPENDIX E

BACT Analysis for the Proposed Digester Gas-Fired Lean Burn IC Engines (S-7831-2-0 & -3-0)

Draft BACT Guideline

Project-Specific Best Available Control Technology (BACT) Guideline

Updated: November 2010

Emissions Unit: Agricultural Biogas Gas-Fired IC Engine

Pollutant	Achieved in Practice or contained in SIP	Technologically Feasible	Alternate Basic Equipment
CO	300 ppmvd @ 15% O_2, 2.5 g/bhp-hr, or 7.8 lb/MW-hr		
NO_X	50 ppmvd @ 15% O_2, 0.6 g/bhp-hr, or 1.9 lb/MW-hr	0.15 g/bhp-hr (lean-burn engine with SCR or Noxtech, rich-burn engine with 3-way catalyst, or other equivalent)	1. Fuel Cells (<0.05 lb/MW-hr ≈ 1.5 ppmv @ 15% O_2) *(Not cost effective without grants)* 2. Microturbines (<9 ppmv @ 15% O_2) 3. Gas Turbine (<9 ppmv @ 15% O_2) *(Note: large gas turbines only ABE for projects ≥ 3 MW)*
PM_{10}	Scrubbing of the of the digester gas such that the sulfur content does not exceed 50 ppmv H_2S		
SO_X	Scrubbing of the of the digester gas such that the sulfur content does not exceed 50 ppmv Sulfur	1. 99% control (Dry absorption of H_2S from the fuel gas) 2. 90% control (Wet absorption of H_2S from the fuel gas)	
VOC	0.20 g/bhp-hr (lean burn or equivalent and either positive crankcase ventilation (PCV) or a 90% efficient crankcase control device)		Fuel Cells (<0.02 lb/MW-hr ≈ 2.0 ppmv @ 15% O_2 as CH_4)

BACT Analysis
Project-Specific BACT Analysis for Proposed Agricultural Digester Gas-Fired Engines

I. Purpose of the Project-Specific BACT Analysis

The proposed dairy digester gas-fired engines are subject to the BACT requirements of District Rule 2201. The District BACT Guidelines do not contain a BACT Guideline that applies to this specific category of source. The most similar District BACT Guideline was rescinded BACT Guideline 3.3.13 (last updated 10/1/2002), which generally applied to waste gas-fired IC engines at wastewater treatment plants and landfills. A significant difference between agricultural biogas and the other types of waste gas that were covered in the rescinded BACT Guideline 3.3.13 is that agricultural biogas does not contain siloxanes, which result from the decomposition of silicon compounds generally found in human cosmetics, personal care products, detergents, pharmaceuticals, lubricants, adhesives, and plastics products. When siloxanes are combusted and then cool in the exhaust, they create a silicate powder or glass-like coating that covers and deactivates catalysts and causes damage to downstream equipment. Because of the presence of siloxanes it was previously determined that the use of most add-on emission control options was infeasible for waste gas-fired engines. However, this determination is not applicable for agricultural biogas, which does not contain siloxanes. Additionally, systems have now been developed and demonstrated that can remove siloxanes from waste gases; therefore, even for non-agricultural biogas, the cost of these systems must be evaluated prior to ruling out add-on control options. Because further reductions in NO_X emission are critical for the District's ability to reach attainment of health-based air quality standards for ozone and particulate matter, in accordance with District Rule 2201, the District will identify and evaluate potential add-on controls and alternative equipment with reduced NO_X emissions and perform a project-specific BACT analysis for the proposed project.

Based on review of the available technical information and contacts with catalyst suppliers, the District has determined that catalytic controls are a technologically feasible control IC engines fired on agricultural biogas. Therefore, this option will be evaluated for the project. Additionally, information from multiple sources indicates that new alternative technologies (such as fuel cells and microturbines) have been utilized at a number of facilities to produce electricity from various types of biogas. These newer technologies have significantly lower NO_X emissions than uncontrolled reciprocating IC engines. Therefore, these technologies will also be included in the project-specific BACT analysis as alternate basic equipment. The project-specific BACT analysis for the proposed agricultural biogas-fired engines will identify add-on emission controls as technologically feasible and will also list the alternate equipment options that are evaluated below.

II. Proposal and Process Description

AgPower Visalia, LLC (District Facility S-7831) has requested Authority to Construct (ATC) permits to install an Andgar Corporation, mesophilic, plug-flow anaerobic digester system with an experimental air injection sulfur removal system, a digester gas-fired backup flare, and two

675 bhp Guascor digester gas-fired lean burn IC engines with hydrogen/syngas injection (S-7831-2 & -3) at the existing Moonlight Dairy operation (District Facility S-5834). The proposed equipment will be used to generate electricity from the gas produced by the digester. According to the applicant, the digester system will produce approximately 360,000 cubic feet of biogas per day. An experimental air injection sulfur removal system (or alternative scrubber) will be used to remove sulfur compounds from the digester gas and then the digester will be combusted in the proposed lean burn IC engines. The engines will be used to produce electricity for the dairy and for sale to Southern California Edison (SCE) or another utility. Some of the heat remaining in the exhaust of the engines will be recovered using a hot water heat pipe circulation system and used to heat the manure in the digesters to maintain mesophilic temperatures (80 - 100 °F). The proposed engines will be permitted to operate 24 hours per day and 365 days per year. When all of the digester gas cannot be combusted in the engines, it will be combusted in the proposed backup flare.

III. Equipment Listing

S-7831-2-0: 675 BHP GUASCOR MODEL SFGLD 360 DIGESTER GAS-FIRED LEAN BURN IC ENGINE WITH A FLORIDA SYNGAS PLASMA ARC REFORMER FOR HYDROGEN/SYNGAS INJECTION SERVED BY AN AIR INJECTION H2S REMOVAL SYSTEM AND AN IRON SPONGE H2S SCRUBBER (OR EQUIVALENT H2S REMOVAL SYSTEM) POWERING AN ELECTRICAL GENERATOR

S-7831-3-0: 675 BHP GUASCOR MODEL SFGLD 360 DIGESTER GAS-FIRED LEAN BURN IC ENGINE WITH A FLORIDA SYNGAS PLASMA ARC REFORMER FOR HYDROGEN/SYNGAS INJECTION SERVED BY AN AIR INJECTION H2S REMOVAL SYSTEM AND AN IRON SPONGE H2S SCRUBBER (OR EQUIVALENT H2S REMOVAL SYSTEM) POWERING AN ELECTRICAL GENERATOR

IV. BACT Applicability

New emissions units – PE > 2.0 lb/day

New Emissions Unit BACT Applicability for S-7831-2-0 & -3-0				
Pollutant	PE2 for unit -7-0 (lb/day)	BACT Threshold (lb/day)	SSPE2 (lb/yr)	BACT Triggered?
NO_X	21.4	> 2.0	N/A	**Yes**
SO_X	140.7	> 2.0	N/A	**Yes**
PM_{10}	2.5	> 2.0	N/A	**Yes**
CO	78.6	> 2.0 and SSPE2 ≥ 200,000 lb/yr	29,638	No
VOC	7.1	> 2.0	N/A	**Yes**

* BACT is not required for CO from a new or modified emissions unit at a Stationary Source with an SSPE2 of less than 200,000 pounds per year of CO.

V. Top-Down BACT Analyses for the Digester Gas-Fired Engines

The U.S. Environmental Protection Agency (USEPA) RACT/BACT/LAER Clearinghouse, the California Air Pollution Control Officers Association (CAPCOA) BACT Clearinghouse, the San Joaquin Valley Unified Air Pollution Control District (SJVUAPCD) BACT Clearinghouse, the Bay Area Air Quality Management District (BAAQMD), and the South Coast Air Quality Management District (SCAQMD) BACT Guidelines were reviewed to determine potential control technologies for this class and category of source. The NO_X emission limits identified in these guidance documents for biogas-fired engines ranged from 0.50 g/bhp-hr to 1.25 g/bhp-hr and were generally similar to the NO_X emission limit of 0.6 g/bhp-hr that was previously listed as achieved in practice BACT for waste gas-fired engines in rescinded BACT Guideline 3.3.13 (last updated 10/1/2002). Additional resources and technical reports were also reviewed to identify potential controls and alternate equipment to produce electricity from digester gas. The additional controls and alternative technologies considered are discussed below.

1. BACT Analysis for NO_X Emissions:

a. Step 1 - Identify all control technologies

The following control technologies and alternative equipment options have been identified for the production of electricity from agricultural digester gas. Emissions from each technology are estimated based on a review of technical documents, contacts with suppliers, and/or engineering judgment.

1) NO_X emissions ≤ 0.6 g/bhp-hr or 50 ppmv@ 15% O_2 (lean burn, pre-stratified charge, or equivalent) (Achieved in Practice)
2) NO_X emissions ≤ 0.15 g/bhp-hr (9-11 ppmv NO_X @ 15% O_2) (Non-Selective Catalytic Reduction (NSCR) for rich burn engines, Selective Catalytic Reduction (SCR) for lean burn engines, hydrogen injection for ultra-lean operation, or equivalent) (Technologically Feasible)
3) Small Gas Turbine (< 25 ppmv NO_X @ 15% O_2) (Alternate Basic Equipment)
4) Microturbine (≤ 9 ppmv NO_X @ 15% O_2) (Alternate Basic Equipment)
5) Fuel Cell (≤ 0.05 lb/MW-hr ≈ 1.5 ppmv NO_X @ 15% O_2) (Alternate Basic Equipment)
6) Stirling Engine (≤ 30 ppmv NO_X @ 3% O_2 external combustion ≈ 10 ppmv NO_X @ 15% O_2) (Alternate Basic Equipment)

<u>Description of Control Technologies</u>

1) NO_X emissions ≤ 0.6 g/bhp-hr (Achieved in Practice)

NO_X emissions ≤ 0.6 g/bhp-hr have been demonstrated by a number of engines that are fired on various types of biogas. One of the most common ways to satisfy this limit is the use of a lean burn engine. There are a number of lean burn engines on the market that can achieve this limit without additional catalytic controls. Lean burn engines operate with high excess air (fuel lean combustion) which reduces the peak combustion temperature. This inhibits the reactions responsible for thermal NO_X.

Lean burn combustion is usually accomplished through special combustion features such as a pre-combustion chamber. Pre-combustion chambers are designed to allow the initial combustion to occur in a fuel-rich environment. Once the combustion process is initiated, the flame travels from the pre-combustion chamber into the main combustion chamber and subsequently ignites an extremely fuel lean mixture, which reduces NO_X.

2) NO_X emissions ≤ 0.15 g/bhp-hr (9-11 ppmv NO_X @ 15% O_2) (Hydrogen Injection for Ultra-Lean Operation or equivalent) (Technologically Feasible)

As described above, lean burn engines operate with high excess air which reduces the peak combustion temperature thereby reducing thermal NO_X. The combustion properties of fuels and engine design limit the amount of excess air that can combusted in an engine while maintaining stable operation. The addition of sufficient hydrogen to the fuel combusted in engines extends the lean burn limit and allows stable combustion of fuel and operation of engines with the use of additional excess air. This reduces further reduces peak flame temperatures, which will result in additional NO_X reductions. The applicant has proposed to install lean burn engines with hydrogen/syngas injection. The applicant is proposing to use catalytic reformers to convert a portion of the digester gas used to fuel the engines into syngas consisting mostly of hydrogen (H_2) and carbon monoxide (CO). The reformers will be designed to supply sufficient hydrogen to compose at least 11% of the total engine fuel by volume. This will allow ultra-lean operation and reduce NOX emissions to ≤ 0.15 g/bhp-hr.

3) Small Gas Turbine (< 25 ppmv NO_X @ 15% O_2) (Alternate Basic Equipment)

Gas turbines are internal combustion engines that operate on the Brayton (Joule) combustion cycle rather than the Otto combustion cycle used in reciprocating internal combustion engines or the diesel cycle for diesel engines. In the Brayton cycle the air flow and fuel injection are steady, and the different parts of the cycle occur continuously within different components of the system. In a gas turbine, fuel is continually injected into the combustion chamber or combustor and air is constantly drawn into the turbine and compressed. All elements of the Brayton cycle occur simultaneously in a gas turbine.

Gas Turbines are one of the cleanest means of generating electricity. With the use of lean pre-mixed combustion or catalytic exhaust cleanup, NO_X emissions from large gas-fired turbines are generally in the single-digit ppmv range. These levels are generally for natural gas-fired units but they are considered technologically feasible for biogas-fired units.

Gas turbines are available in sizes ranging from 500 kW - 25 MW. Based on contacts with turbine suppliers, biogas-fired turbines used to produce electricity are expected to be available in the size range of 2 - 7 MW. According to Solar Turbines, the smaller biogas-fired turbines are no longer actively produced or marketed since this size range is generally covered by other generation technologies such as reciprocating IC engines and microturbines.

4) Microturbine (≤ 9 ppmv NO_X @ 15% O_2) (Alternate Basic Equipment)

Microturbines are small gas turbines rated between 25 kW and 500 kW that burn gaseous and liquid fuels to generate electricity or provide mechanical power. Microturbines were developed from turbocharger technologies found in large trucks and the turbines in aircraft auxiliary power units. Microturbines can be operated on a wide variety of fuels, including natural gas, liquefied petroleum gas, gasoline, diesel, landfill gas, and digester gases. According to the California Air Resources Board (ARB), there were approximately 200 biogas-fired microturbines operating in California as of the year 2006.[7] Microturbines generally have electrical efficiencies of 25-30%; however, the electrical efficiency of larger microturbines (≥ 200 kW) can range from 30-33%. Microturbine manufacturers include Capstone Microturbines and Ingersoll Rand Energy Systems.

Microturbines without add-on controls can meet very stringent emission limits and have significantly lower emissions of NO_X, CO, and VOC emissions than uncontrolled reciprocating engines because most microturbines operating on gaseous fuels utilize lean premixed (dry low NO_X, or DLN) combustion technology. Microturbines manufacturers will generally guarantee NO_X emissions of 9-15 ppmv @ 15% O_2. However, several emission tests performed on biogas-fired microturbines have indicated even lower emissions. A number of dairy digester gas-fired microturbines have been installed in Europe and some have recently been installed at dairies in the United States, including Twin Birch Dairy and New Hope Farm View Dairy in New York and den Dulk Dairy in Michigan.[8]

5) Fuel Cell (≤ 0.05 lb- NO_X/MW-hr ≈ 1.5 ppmv NO_X @ 15% O_2) (Alternate Basic Equipment)

Fuel cells use an electrochemical process to produce a direct electric current without the combustion of fuel. Fuel cells use externally supplied reactant gases (hydrogen and oxygen) that are combined in a catalytic process. Like a battery, the electric potential generated by a fuel cell is accessed by connecting an external load to the anode and cathode plates of the fuel cell. Because the fuel for a fuel cell is supplied externally, it does not run down like a battery. However, the fuel cell stack must be periodically replaced because of deactivation of catalytic materials contained in the fuel cell, which results in reduced conversion efficiencies. Since fuel cells require pure hydrogen gas for fuel, hydrocarbons used to power fuel cells must be purified and reformed prior to use. The reformation process can occur in an external fuel processor or through internal reforming in the fuel cell. Both molten carbonate fuel cells and solid oxide fuel cells can internally reform the hydrocarbon fuel to hydrogen for use in the fuel cell. Additionally, these high temperature fuel cells are tolerant of CO_2 that is found biogas.

[7] "Staff Report: Initial Statement of Reasons for Proposed Amendments to the Distributed Generation Certification Regulation" (9/1/2006), Cal EPA - ARB, Executive Summary Pg. ii (http://www.arb.ca.gov/regact/dg06/dgisor.pdf)
[8] See EPA AgStar Program "Guide to Anaerobic Digesters" (http://www.epa.gov/agstar/operational.html)

Fuel cells have recently been commercialized and offer the advantages of high efficiency, nearly negligible emissions, and very quiet power generation. The greatest deterrent to increased use of fuel cells is the significantly higher expense when compared to other generation technologies. These higher costs include the initial capital expense and, for biogas installations, the increased ongoing expenses associated with the extensive cleanup required to remove contaminants that can poison fuel cells. Although this expense can be substantial, biogas-fueled fuel cells have been installed at several wastewater treatment plants and fuel cells have also been fueled with other types of biogas (e.g. landfill gas and brewery wastewater gas). A dairy digester gas-fired fuel cell test project was also installed at Haubenschild Dairy in Minnesota. The fuel cell operated successfully but the cost of gas cleanup and reforming to hydrogen for the low temperature Proton Exchange Membrane (PEM) fuel cell was prohibitive. A Cornell University, Manure Management Program study about using fuel cells to generate energy from biogas found that fuel cells were "technically feasible on dairy farms with 1,000 cows" (http://www.manuremanagement.cornell.edu/Docs/Fuel%20Cell%20Technote%2010-07-04%20FINAL.pdf).

Based on the information available, the District has determined that this alternative option is technologically feasible and therefore must be further analyzed for cost-effectiveness below.

6) Stirling Engine (≤ 30 ppmv NO_X @ 3% O_2 external combustion ≈ 10 ppmv NO_X @ 15% O_2) (Alternate Basic Equipment)

Stirling engines are external combustion engines that use an external heat source to transfer energy to a working fluid sealed inside the engine. The inert working fluid sealed inside Stirling engines is usually either helium or hydrogen. Stirling engines are generally rated in the smaller size range of less than 55 kW and are typically produced for specialized applications. The overall efficiency of Stirling engines is around 15-30%.

Because Stirling engines use external combustion, they have the potential for very low emissions equivalent to those produced by a boiler. A few biogas-fired Stirling external combustion engines were tested at landfills but there were problems keeping the working fluid completely sealed in the engines. No digester gas-fired external combustion engines that are currently operating could be identified. It is not known if Stirling engines are currently being commercially produced. The main producer of Stirling engines, STM Power, closed in 2007 and was only recently revived as Stirling Biopower. Therefore, this option will not be evaluated further for this project.

b. Step 2 - Eliminate technologically infeasible options

1) Small Gas Turbine (< 25 ppmv NO_X @ 15% O_2) (Alternate Basic Equipment):

According to Solar Turbines, biogas-fired gas turbines rated less than 3 MW are not currently being produced or marketed since this size range is generally covered by other generation technologies such as reciprocating IC engines and microturbines.

The proposed project would require a gas turbine rated 900 kW, which is below the range that is currently being marketed; therefore, small biogas turbines are not considered feasible for this particular project and will be eliminated from consideration at this time.

2) Stirling Engine (≤ 30 ppmv NO_X @ 3% O_2 external combustion ≈ 10 ppmv NO_X @ 15% O_2) (Alternate Basic Equipment)

   The Stirling engines tested at landfills had problems containing the working fluid and the small size of the units would likely be inadequate for the proposed project. Additionally, it is not known if Stirling engines are currently being commercially produced in sufficient numbers to allow timely completion of this project. Therefore, Stirling engines are not considered feasible for this particular project and will be eliminated from consideration at this time.

c. Step 3 - Rank remaining options by control effectiveness

1) Fuel Cell (≤ 0.05 lb/MW-hr ≈ 1.5 ppmv NO_X @ 15% O_2) (Alternate Basic Equipment)
2) NO_X emissions ≤ 0.15 g/bhp-hr (9-11 ppmv NO_X @ 15% O_2)
   a. NO_X emissions ≤ 0.15 g/bhp-hr (9-11 ppmv NO_X @ 15% O_2) (Hydrogen Injection or equivalent) (Technologically Feasible)
   b. Microturbine (≤ 9 ppmv NO_X @ 15% O_2) (Alternate Basic Equipment)
3) NO_X emissions ≤ 0.6 g/bhp-hr or 50 ppmv@ 15% O_2 (lean burn, pre-stratified charge, or equivalent) (Achieved in Practice)

d. Step 4 - Cost Effectiveness Analysis

Pursuant to Section IX.D of District Policy APR 1305 – BACT Policy, a cost effectiveness analysis is required for the options that have not been determined to be achieved in practice. In accordance with the District's Revised BACT Cost Effectiveness Thresholds Memo (5/14/08), to determine the cost effectiveness of particular technologically feasible control options or alternate equipment options, the amount of emissions resulting from each option will be quantified and compared to the District Standard Emissions allowed by the District Rule that is applicable to the particular unit. The emission reductions will be equal to the difference between the District Standard Emissions and the emissions resulting from the particular option being evaluated.

The proposed digester gas-fired IC engines will be located at the dairy but will not be operated by the dairy. The digester, flare, and IC engines will be operated as a separate facility (at the same stationary source) by a separate company that specializes in generation of energy from biogas; therefore, the District has determined that the IC engines are non-agricultural IC engines. The rich burn, digester gas-fired, engines are subject to the District Rule 4702 emission limits for non-agricultural, rich burn, waste gas-fired IC engines. Therefore, in accordance with the District's Revised BACT Cost Effectiveness Thresholds Memo, the District Standard Emissions used for the BACT cost analysis below for the proposed engines will be based on the emission limits for non-agricultural, lean burn, waste gas-fired IC engines contained in District Rule 4702, Section

5.1.1, Table 1, 2.b (65 ppmvd NO_X, 2,000 ppmvd CO, and 750 ppmvd VOC (all measured @ 15% O_2)).

Option 1: Fuel Cells (≤ 0.05 lb/MW-hr ≈ 1.5 ppmv NO_X @ 15% O_2) (Alternate Basic Equipment)

Since Fuel Cells have reduced NO_X and VOC emissions in comparison to a reciprocating IC engine, a Multi-Pollutant Cost Effectiveness Threshold (MCET) will be used to determine if this option is cost-effective. The following cost analysis demonstrates that replacement of the proposed engine with a fuel cell is not cost effective even when the additional operation costs of a fuel cell are not considered.

Assumptions

- The combined total amount of gas produced by the digester will not exceed 131.40 MMscf/yr. This is equal to annual heating content of 78,840 MMBtu/yr based on a digester gas heating value of 600 Btu/scf.
- Biogas F-Factor: 9,100 dscf/MMBtu (60 °F)
- Higher Heating Value for Dairy Digester Gas: 600 Btu/scf
- Molar Specific Volume = 379.5 scf/lb-mol (60°F)
- Price for electricity: $0.08843/kW-hr (based on California Renewable Energy Tariff for projects on-line in 2011)
- BHP to Btu/hr conversion: 2,545 Btu/hp-hr
- Btu to kW-hr conversion: 3,413 Btu/kW-hr

Assumptions for Proposed Digester Gas-Fired IC Engines (S-7831-2 & -3)

- Each of the digester gas-fired IC engines can operate 24 hrs per day and 365 days per year.
- Typical mechanical efficiency for engine: 33%
- Generator Efficiency: 95%
- The total annual heating input of the digester gas combusted in either one of the proposed engines (S-7831-2 or -3) will not exceed 45,602 MMBtu/yr (= 675 bhp x 24 hr/day x 365 day/yr x 2,545 Btu/hp-hr x 1 $hp\text{-}hr_{in}$/0.33 $hp\text{-}hr_{out}$ x 1 MMBtu/10^6 Btu). This is equivalent to 76.00 MMscf/yr based on a digester gas heating value of 600 Btu/scf.
- Typical purchase and Installation Cost for digester engines: $1,475/kW (estimated based on review conducted by District)
- Typical operation costs for engines: $0.0152/kW-hr (estimated based on review conducted by District)
- Rule 4702 NO_X emission limit for non-agricultural, lean burn, waste gas-fired IC engines: 65 ppmv @ 15% O_2 = 0.2524 lb/MMBtu

- Rule 4702 VOC emission limit for non-agricultural, lean burn, waste gas-fired IC engines: 750 ppmv @ 15% O_2 as CH_4 = 1.0132 lb/MMBtu

Assumptions for Fuel Cell System

- Net electrical efficiency for fuel cell power plant: 39% (includes parasitic load for gas conditioning system)
- Typical Purchase and Installation Cost for fuel cells including cost for biogas conditioning system: $7,000/kW (based on review conducted by District)
- Typical operation costs for fuel cells: $0.0215/kW-hr (based on review conducted by District)
- Fuel Cell Stack Replacement Cost: $500/kW-yr (conservatively estimated based stack replacement being one quarter of initial installation cost and stack replacement being required every 3.5 years) [9]
- Fuel Cell NO_X emissions: 0.05 lb/MW-hr = 0.0058 lb/MMBtu (≤ 1.5 ppmv NO_X @ 15% O_2) *(Note: fuel cells are usually certified to the ARB Distributed Generation Certification level of 0.07 lb-NO_X/MW-hr; however, measured emissions from many fuel cells have been lower)*
- Fuel Cell VOC emissions: 0.02 lb-VOC/MW-hr = 0.0027 lb/MMBtu (≤ 2.0 ppmv VOC @ 15% O_2 as CH_4 based on ARB Distributed Generation Certification level of 0.02 lb-VOC/MW-hr and emission tests on fuel cells)
- Size of fuel cell system needed to replace one of the proposed engines: 595 kW (estimated based on an average heat input of 124.936 MMBtu/day and a fuel cell efficiency of 39%)
- Fuel cells may offer the ability for greater heat recovery in comparison to an IC engine; however, the value of this heat will not be quantified since it is not known if the facility has an economical use for it.

Capital Cost

The estimated increased incremental capital cost for replacement of one of the proposed 675 bhp IC engines with a fuel cell is calculated based on the difference in cost of a fuel cell power plant and the IC engine.

The incremental capital cost for replacement of the proposed IC engine with a fuel cell power plant is calculated as follows:

(595 kW x $7,000/kW) - (450 kW x $1,475/kW) = $3,501,250

[9] Examples of fuel cell stack replacement costs and intervals are provided in the following links: http://www.ornl.gov/sci/femp/pdfs/020501-Hughes-fuelcell-WashingtonDC.pdf, http://masstech.org/Project%20Deliverables/GB_GSI_FeasibilityStudy_Gill_Montague.pdf, http://www.masstech.org/is/westover_profile.pdf, http://www.epa.gov/chp/documents/catalog_chptech_fuel_cells.pdf http://dodfuelcell.cecer.army.mil/climate/reports/AK_PostOfficeReport.pdf http://www.fuelcellenergy.com/files/Copy%20of%20DFC300MA%20Spec%20_9318.pdf

Annualized Capital Cost

Pursuant to District Policy APR 1305, section X (11/09/99), the incremental capital cost for the purchase of the fuel cell system will be spread over the expected life of the system using the capital recovery equation. The expected life of the entire system will be estimated at 10 years. A 10% interest rate is assumed in the equation and the assumption will be made that the equipment has no salvage value at the end of the ten-year cycle.

$$A = [P \times i(I+1)^n]/[(I+1)^n-1]$$

Where: A = Annual Cost
P = Present Value
I = Interest Rate (10%)
N = Equipment Life (10 years)

$$A = [\$3{,}501{,}250 \times 0.1(1.1)^{10}]/[(1.1)^{10}-1]$$
$$= \mathbf{\$569{,}812/year}$$

Annual Costs

Electricity Generated

The amount of electricity potentially generated by each option is calculated as follows:

Proposed IC Engine
450 kW x 24 hr/day x 365 day/yr = 3,942,000 kW-hr/year

Fuel Cells (Alternate Equipment)
124.936 MMBtu/day x 10^6 Btu/MMBtu x 1 day/24 hr x 1 kW-hr/3,413 Btu x 0.39 (electrical efficiency) = 595 kW

45,602 MMBtu/yr x 10^6 Btu/MMBtu x 1 kW-hr/3,413 Btu x 0.39 (electrical efficiency) = 5,210,894 kW-hr/year

Revenue from Increased Electric Generation from a Fuel Cell Power Plant
(5,210,894 kW-hr/yr - 3,942,000 kW-hr/yr) x $0.08843/kW-hr = $112,208/year

Annual Operation and Maintenance Cost
The annual operation and maintenance costs for each option are calculated as follows:

Proposed IC Engines
3,942,000 kW-hr/yr x $0.0152/kW-hr = $59,918/year

Fuel Cells (Alternate Equipment)
5,210,894 kW-hr/yr x $0.0215/kW-hr = $112,034/year

Annual Costs of Increased Maintenance
$112,034/yr - $59,918/yr = $52,116/year

Fuel Cell Stack replacement Costs
$500/kW-yr x 595 kW = $297,500/year

Total Increased Annual Costs for Fuel Cell System as an Alternative to Proposed Engines

$569,812/year - $112,208/year + $52,116/year + $297,500/year = **$807,220/year**

NO_X Emission Reductions:

NO_X Emission Factors:

Pursuant to the District's Revised BACT Cost Effectiveness Thresholds Memo (5/14/08), District Standard Emissions that will be used to compare with the alternative equipment will be based on the emission limits for lean burn agricultural IC engines contained in District Rule 4702, Section 5.1.1, Table 1, 1.a.

The following emissions factors will be used for the cost analysis:

District Standard Emissions: 0.2524 lb-NO_X/MMBtu (65 ppmv NO_X @ 15% O_2) and 1.0132 lb-VOC/MMBtu (750 ppmv VOC @ 15% O_2 as CH_4)

Emissions from Fuel Cells as Alternative Equipment: 0.0058 lb-NO_X/MMBtu (0.05 lb-NO_X/MW-hr; 1.5 ppmv @ 15% O_2) and 0.0027 lb-VOC/MMBtu (0.02 lb-VOC/MW-hr; 2 ppmv @ 15% O_2 as CH_4)

Emission Reductions:

Proposed Engine Compared to Fuel Cell based on District Standard Emission Reductions

NO_X Emission Reductions (50 ppmv → 1.5 ppmv)
45,602 MMBtu/yr x (0.2524 lb-NO_X/MMBtu – 0.0058 lb-NO_X/MMBtu) = 11,245 lb-NO_X/year (5.62 ton/year)

VOC Emission Reductions (250 ppmv → 2.0 ppmv)
45,602 MMBtu/yr x (1.0132 lb-VOC/MMBtu – 0.0027 lb-VOC/MMBtu) = 46,081 lb-VOC/year (23.04 ton/year)

Multi-Pollutant Cost Effectiveness Thresholds (MCET) for NO_X and VOC Reductions based on District Standard Emission Reductions

(5.62 ton-NO_X/year x $24,500/ton-$NO_X$) + (23.04 ton-VOC/year x $17,500/ton-VOC)
= **$540,890/year**

As shown above, the annualized capital cost of this alternate option exceeds the Multi-Pollutant Cost Effectiveness Threshold (MCET) calculated for the NO_X and VOC emission reductions even when the additional operational costs are not considered. Therefore, this option is not cost effective and is being removed from consideration.

Option 2: NO_X emissions ≤ 0.15 g/bhp-hr (Hydrogen Injection or equivalent) (Technologically Feasible)

The applicant has proposed this option; therefore a cost analysis is not required.

Although the District considers 0.15 g-NO_X/bhp-hr to be technologically feasible BACT for biogas-fired engines, there remains some uncertainty if this emission limit can be met consistently given the fact that previous installations of controls on biogas-fired engines have not been successful. Because of this remaining uncertainty, conditions will be incorporated into the ATC permit allowing NO_X emissions above 0.15 g-NO_X/bhp-hr (but not greater than the achieved in practice BACT level of 0.6 g-NO_X/bhp-hr provided that the other conditions in the ATC are met and the applicant makes a satisfactory effort to reduce NO_X emissions to the lowest possible level to satisfy BACT.

Option 4: NO_X emissions ≤ 0.6 g/bhp-hr or 50 ppmv @ 15% O_2 (Achieved in Practice)

This option is achieved practice; therefore, no cost analysis is required.

e. Step 5 - Select BACT

Pursuant to the above Top-Down BACT Analysis, BACT for the Digester Gas-fired Engines must be satisfied with the following:

NO_X:
1) NO_X emissions no greater than 0.6 g/bhp-hr (Achieved in Practice) &
2) Applying controls to reduce NO_X emissions to ≤ 0.15 g/bhp-hr (9-11 ppmv @ 15% O_2)

The applicant has proposed to utilize hydrogen/syngas injection to reduce NO_X emissions from the proposed to digester gas-fired lean burn IC engines to ≤ 0.15 g/bhp-hr (and is also proposing that NO_X emissions from the engines will not exceed 0.6 g/bhp-hr if the hydrogen/syngas injection system does not result in the expected NO_X reductions. Therefore, the BACT requirements are satisfied.

2. BACT Analysis for SO_X Emissions:

a. Step 1 - Identify all control technologies

The following technologies were identified to reduce SO_X emissions from the proposed engine:

1) Dry absorption of H_2S from the fuel gas (98-99% -Technologically Feasible)
2) Wet absorption of H_2S from the fuel gas (95-98% -Technologically Feasible)
3) Sulfur Content of fuel gas not exceeding 50 ppmv H_2S (90-98% - Achieved in Practice/Contained in SIP)
4) Influent fuel H_2S reduction by addition of chemicals to the digester (90% - Technologically Feasible)
5) Water scrubbing of H_2S from the fuel gas (80% -Technologically Feasible)

There are no options listed in the SJVUAPCD BACT Clearinghouse as alternate basic equipment.

b. Step 2 - Eliminate technologically infeasible options

There are no technologically infeasible options to eliminate from step 1.

c. Step 3 - Rank remaining options by control effectiveness

The control efficiency of each of the options above is estimated and the controls are ranked below based on the control effectiveness.

1) Dry absorption of H_2S from the fuel gas (98-99% -Technologically Feasible)
2) Wet absorption of H_2S from the fuel gas (95-98% -Technologically Feasible)
3) Sulfur Content of fuel gas not exceeding 50 ppmv H_2S (90-98% - Achieved in Practice)
4) Influent fuel H_2S reduction by addition of chemicals to the digester (90% - Technologically Feasible)
5) Water scrubbing of H_2S from the fuel gas (80% -Technologically Feasible)

d. Step 4 - Cost Effectiveness Analysis

Dairy digester gas from a heated plug flow digester can have a sulfur content greater than 4,000 ppmv as H_2S. The applicant is proposing to use an experimental sulfur removal system or alternative scrubber approved by the District to reduce the sulfur content of the digester gas combusted in the engine to ≤ 50 ppmv. The applicant has chosen to utilize an alternative sulfur removal system that will reduce the sulfur content of the digester gas by up to 98.75%, which the is considered equivalent to the most effective options listed above; therefore, no cost analysis is required.

e. Step 5 - Select BACT

BACT for SO_X emissions from the proposed engines is a scrubber that reduces the sulfur compounds in the gas to 50 ppmv or less. The applicant has proposed an experimental sulfur removal system or alternative scrubber approved by the District to reduce the sulfur content of the digester gas combusted in the flare to ≤ 50 ppmv. Therefore, the BACT requirements for SO_X are satisfied.

3. BACT Analysis for PM_{10} Emissions:

a. Step 1 - Identify all control technologies

Combustion of gaseous fuels generally does not result in significant emissions of particulate matter. Dairy anaerobic digester gas is the planned fuel for the proposed IC engines. The anaerobic digester gas will be composed primarily of methane (approximately 60% molar composition) and CO_2 (approximately 40% molar composition) and is expected to burn in a fairly clean manner. Particulate emissions from combustion of the digester gas are expected to primarily result from the

incineration of fuel-born sulfur compounds (mostly H_2S) resulting in the formation of sulfur-containing particulate. Therefore, scrubbing of the digester gas is the principal means to reduce particulate emissions.

The following control was identified to reduce particulate matter emissions from combustion of the digester gas as fuel in the proposed engines:

1) Scrubbing Gas Such that the Sulfur Content of fuel gas does not exceed 50 ppmv (Achieved in Practice/Contained in SIP)

b. Step 2 - Eliminate technologically infeasible options

There are no technologically infeasible options to eliminate from step 1.

c. Step 3 - Rank remaining options by control effectiveness

1) Scrubbing Gas Such that the Sulfur Content of fuel gas does not exceed 50 ppmv (Achieved in Practice/Contained in SIP)

d. Step 4 - Cost Effectiveness Analysis

The only option listed above has been identified as achieved in practice for SO_X emissions for the same source category. Therefore, the option is required and is not subject to a cost analysis.

e. Step 5 - Select BACT

BACT for PM_{10} emissions from the proposed engines is a scrubber that reduces the sulfur compounds in the gas to 50 ppmv or less. The applicant has proposed an experimental sulfur removal system or alternative scrubber approved by the District to reduce the sulfur content of the digester gas combusted in the engines to ≤ 50 ppmv. Therefore, the BACT requirements for PM_{10} are satisfied.

4. BACT Analysis for VOC Emissions:

a. Step 1 - Identify all control technologies

District Source Tests of biogas-fired engines and other technical information resources were reviewed to determine the achieved in practice VOC Emission Limit for Biogas Fired Engines. The following emission data regarding VOC emissions was obtained from District Source Test Records:

<u>Tulare Energy, Visalia Landfill Gas-Fired Lean Burn IC Engine (1,150 bhp each)</u>

S-2890-1-4: VOC Emissions: 0.042 g/bhp-hr; 7.2 ppmv VOC @ 15% O_2 as CH_4 (11/15/06 Source Test)

S-2890-2-4: VOC Emissions: 0.024 g/bhp-hr; 4.2 ppmv VOC @ 15% O_2 as CH_4 (11/15/06 Source Test)

Visalia Wastewater Treatment Plant Digester Gas-Fired Lean Burn IC Engines (620 bhp each)

S-984-10-3: VOC Emissions: 0.0476 g/bhp-hr; 9.35 ppmv VOC @ 15% O_2 as CH_4 (10/28/08 Source Test)

S-984-13-2: VOC Emissions: 0.0514 g/bhp-hr; 10.1 ppmv VOC @ 15% O_2 as CH_4 (7/13/06 Source Test)

Tulare City Wastewater Treatment Plant Digester Gas-Fired Lean Burn IC Engine (670 bhp)

S-548-3-2: VOC Emissions: 12.1 ppmv VOC @ 15% O_2 as CH_4 (9/5/08 Source Test)

Stockton Wastewater Treatment Facility Digester Gas-Fired Lean Burn IC Engines (1,408 bhp each)

N-811-21-3: VOC Emissions: 0.119 g/bhp-hr; 20.54 ppmv VOC @ 15% O_2 as CH_4 (10/11/06 Source Test)

N-811-22-3: VOC Emissions: 0.138 g/bhp-hr; 24.77 ppmv VOC @ 15% O_2 as CH_4 (5/23/07 Source Test)

N-811-23-3: VOC Emissions: 0.114 g/bhp-hr; 20.77 ppmv VOC @ 15% O_2 as CH_4 (10/31/07 Source Test)

City of Manteca Wastewater Treatment Facility Digester Gas-Fired Lean Burn IC Engine (643 bhp)

N-1049-8-0: VOC Emissions: 34.3 ppmv VOC @ 15% O_2 as CH_4 (6/6/06 Source Test)

(Note: the engine serves a 450 kW generator but because of insufficient digester gas, the engine only runs at part load. During this source test the engine was producing 150 kW of electricity and natural gas supplied approximately 50% of the heat value combusted in the engine. Although the VOC emissions are not very high, they would be even less if the engine were run at closer to full load. VOC emissions would also likely be less if the engine were fired solely on digester gas since the source tests reviewed for engines that combusted both digester gas and natural gas showed lower VOC emissions when the engines were fired on digester gas.)

Valencia Wastewater Treatment Facility Digester Gas-Fired IC Engine with a Clean Burn Pre-Combustion Chamber (825 bhp)[10]

Total Hydrocarbon emissions: 0.68 lb/MW-hr (≈ 0.22 g/bhp-hr) *(note: because this value is a total hydrocarbon measurement that includes methane, VOC emissions will be much less)*

[10] Electric Power Research Institute (EPRI). Comparison of Distributed Generation Technology Options, 250-400 kW - Micro-turbines, Carbonate Fuel Cells, Internal Combustion Engines (1010527), Technical Update. March 2006.

Biogas-Fired Engine at Landfills

Combustion control devices for landfill collection systems at landfills subject to the standards of NSPS, 40 CFR 60, Subpart WWW must reduce emissions of non-methane organic compounds (NMOC) by 98% or meet an NMOC emission limit of 20 ppmvd NMOC @ 3% O_2 as hexane. There are landfills currently using engines as control devices to meet this standard. Although some landfills may use an afterburner to meet the standard, many meet the standard by using only an IC engine. When converted the NSPS emission standard is approximately to 0.16 - 0.20 g-VOC/bhp-hr.

Landfill gas, though not identical to anaerobic digester gas, is generated by a similar anaerobic process and has similar characteristics. The main difference between landfill and digester gas is that landfill gas will typically contain more CO_2 and have a lower heating value, which would make incomplete combustion and higher VOC emissions more likely for landfill gas than for digester gas. Therefore, digester gas-fired engines are also capable of meeting this standard, as shown by the source tests above.

Achieved in Practice Conclusion

Based on the above information, it has been determined that an emission limit of 0.20 g-VOC/bhp-hr (≈ 40 ppmv VOC @ 15% O_2 as CH_4) is achieved in practice for digester gas-fired engines. This limit will be listed below.

The following technologies were identified to reduce VOC emissions:

1) VOC emissions ≤ 0.20 g/bhp-hr (lean burn or equivalent and positive crankcase ventilation) (Achieved in Practice)
2) Fuel Cell (≤ 0.02 lb/MW-hr ≈ 2.0 ppmv VOC @ 15% O_2 as CH_4) (Alternate Basic Equipment)
3) Microturbine (≤ 30 ppmv VOC @ 15% O_2 as CH_4) (Alternate Basic Equipment)

b. Step 2 - Eliminate technologically infeasible options

There are no technologically infeasible options to eliminate from step 1.

c. Step 3 - Rank remaining options by control effectiveness

1) Fuel Cell (≤ 0.02 lb/MW-hr ≈ 2.0 ppmv VOC @ 15% O_2 as CH_4) (Alternate Basic Equipment)

2.a) VOC emissions ≤ 0.20 g/bhp-hr (Achieved in Practice)

2.b) Microturbine (≤ 35 ppmv VOC @ 15% O_2 as CH_4) (Alternate Basic Equipment)

d. Step 4 - Cost Effectiveness Analysis

Option 1: Fuel Cell (≤ 0.02 lb/MW-hr ≈ 2.0 ppmv VOC @ 15% O_2 as CH_4) (Alternate Basic Equipment)

The multi-pollutant cost analysis performed above for the NO_X and VOC emissions demonstrated that the annualized cost of this alternate option exceeds the Multi Pollutant Cost Effectiveness Threshold calculated for the NO_X and VOC emission

reductions achieved by this technology. Therefore, this option is not cost effective and is being removed from consideration.

Option 2.a: VOC emissions ≤ 0.20 g/bhp-hr (Achieved in Practice)

This option is achieved practice; therefore, no cost analysis is required.

Option 2.b: Microturbines (≤ 35 ppmv VOC @ 15% O_2) (Alternate Basic Equipment)

Test results have indicated that biogas-fired microturbines are capable of meeting very low VOC emission limits. Microturbines are commonly used at landfills and therefore the specifications for microturbines will generally indicate that they are capable of meeting the NSPS, 40 CFR 60, Subpart WWW non-methane organic compounds (NMOC) emission standard of 98% destruction or 20 ppmvd NMOC @ 3% O_2 as hexane. As shown above, efficient reciprocating IC engines are also capable of meeting this standard.

The actual amount of VOC emitted from an efficient lean burn IC engine or microturbine will actually be more dependent on the type of fuel used and the VOC content of the fuel prior to combustion. Because digester gas generally contains only small amounts of VOCs, the difference in emissions for combustion in an engine meeting BACT and a microturbine will not be substantial. Therefore, this option will be deemed equivalent to the achieved in practice BACT level shown above for digester gas-fired reciprocating IC engines. Because microturbines will only be listed as an equivalent alternative option to the achieved in practice standard for VOC and are not being required, no cost analysis is necessary.

e. Step 5 - Select BACT

BACT for VOC emissions from the proposed engines is VOC emissions not exceeding 0.20 g/bhp-hr. The applicant has proposed IC engines with VOC emissions of 0.20 g/bhp-hr. Therefore, the BACT requirements for VOC are satisfied.

APPENDIX F

Summary of Health Risk Assessment (HRA) & Ambient Air Quality Analysis (AAQA)

San Joaquin Valley Air Pollution Control District
Risk Management Review

To:	Ramon Norman
From:	Trevor Joy - Technical Services
Date:	8/5/2010
Facility Name:	AgPower Visalia
Location:	5061 Avenue 280 Visalia, CA
Application #(s):	S-7831-1-0, 2-0, 3-0
Project #:	1103627

A. RMR SUMMARY

Categories	Biogas Fired Flare 1-0	Biogas Fired IC Engine 2-0	Biogas Fired IC Engine 3-0	Project Totals	Facility Totals
Prioritization Score	0.01	0.03	0.03	0.07	0.07
Acute Hazard Index	N/A[1]	N/A[1]	N/A[1]	N/A[1]	0.0
Chronic Hazard Index	N/A[1]	N/A[1]	N/A[1]	N/A[1]	0.0
Maximum Individual Cancer Risk (10^{-6})	N/A[1]	N/A[1]	N/A[1]	N/A[1]	0.0
T-BACT Required?	**No**	**No**	**No**		
Special Permit Conditions?	**Yes**	**Yes**	**Yes**		

1. No further analysis was required since the prioritization score was below 1.0.

Proposed Permit Conditions

To ensure that human health risks will not exceed District allowable levels; the following permit conditions must be included for:

Units 1-0 through 3-0

1. {1898} The exhaust stack shall vent vertically upward. The vertical exhaust flow shall not be impeded by a rain cap, roof overhang, or any other obstruction. [District Rule 4102] N
2. During commissioning only 1 unit can be operating at a time.
3. Two (or 3) [of units -1-0, -2-0, and -3-0] can operate at the same time only if each units sulfur ppmv level is less then 1,000 ppmv

B. RMR REPORT

I. Project Description

Technical Services received a request on July 22, 2010 to perform a Risk Management Review (RMR) and an Ambient Air Quality Analysis (AAQA) for the installation of a new plug flow anaerobic digester system, including two 675 bhp biogas-fired IC engines and a biogas-fired flare.

II. Analysis

Toxic emissions for these proposed units were calculated using "Flare (Waste Gas)" and "Digester Gas- Internal Combustion San Diego" emission factors. In accordance with the District's *Risk Management Policy for Permitting New and Modified Sources* (APR 1905, March 2, 2001), risks from the proposed unit's toxic emissions were prioritized using the procedure in the 1990 CAPCOA Facility Prioritization Guidelines and incorporated in the District's HEARTs database. The prioritization score for the proposed units were less than 1.0 (see RMR Summary Table). Therefore, no further analysis was necessary.

The following parameters were used for the review:

Analysis Parameters **Biogas Flare (1-0)**			
Source Type	Point	**Location Type**	Rural
Stack Height (m)	6.7	**Closest Receptor (m)**	627
Stack Diameter. (m)*	0.52	**Type of Receptor**	Residence
Stack Exit Velocity (m/s)**	20	**Rating (MMScf/hr)**	0.015
Stack Exit Temp. (°K)**	1,273	**Rating (MMScf/yr)**	13.14

*Effective stack diameter calculated by FYI 69
**Default temperature and velocity according to FYI 69

Analysis Parameters **675 Bhp Biogas IC Engine (7-0) and (8-0)**			
Source Type	Point	**Location Type**	Rural
Stack Height (m)	6.7	**Closest Receptor (m)**	627
Stack Diameter. (m)	0.25	**Type of Receptor**	Residence
Stack Exit Velocity (ft^3/sec)	32.57	**Rating (MMScf/hr)**	0.015
Stack Exit Temp. (°K)	670.9	**Rating (MMScf/yr)**	131.4

Technical Services performed AAQA modeling for criteria pollutants CO, NOx, SOx and PM_{10}. For sulfur, three scenarios were looked at – commissioning emissions, 1000 ppmv sulfur concentrations, and standard emissions:

Criteria Pollutant Lb/hr	Biogas Fired Flare 1-0	Biogas Fired IC Engine 2-0	Biogas Fired IC Engine 3-0
NOx	0.54	0.8929	0.8929
SOx	0.507	0.2976	0.2976
SOx (1000 ppmv)	2.535	1.4643	1.4643
SOx (Commissioning)	10.125	5.86	5.86
PM10	0.072	0.1042	0.1042
CO	3.33	3.27	3.27

Criteria Pollutant Lb/yr	Biogas Fired Flare 1-0	Biogas Fired IC Engine 2-0	Biogas Fired IC Engine 3-0
NOx	473.0	7821.6	7821.6
SOx	441.1	2607.2	2607.2
SOx (Commissioning)	6788.6	7825.2	7825.2
PM10	63.1	912.5	912.5

Criteria Pollutant Modeling Results*

Digester Gas ICE	1 Hour	3 Hours	8 Hours.	24 Hours	Annual
CO	Pass	X	Pass	X	X
NO_x	Pass	X	X	X	Pass
SO_x[2]	Pass	Pass	X	Pass	Pass
PM_{10}	X	X	X	Pass[1]	Pass[1]

*Results were taken from the attached PSD spreadsheet.
[1]The criteria pollutants are below EPA's level of significance as found in 40 CFR Part 51.165 (b)(2).
[2]SOx passes only if: During commissioning only 1 unit operates at a time; and 2 (or 3) units operate simultaneously only after, for each unit, sulfur ppmv is less than or equal to 1,000 ppmv.
Note: NO2 values reflect the new 1 Hr standard imposed by EPA on April 12, 2010

PM_{10} Pollutant Modeling Results*
Values are in $\mu g/m^3$

Category	24 Hours	Annual
Proposed	1.3	0.3
Significance Level	5.0	1.0
Result	Pass	Pass

III. Conclusion

The prioritization score is less than 1.0. **In accordance with the District's Risk Management Policy, the project is approved without Toxic Best Available Control Technology (T-BACT).**

To ensure that human health risks will not exceed District allowable levels; the permit conditions listed on page 1 of this report must be included for this proposed unit.

These conclusions are based on the data provided by the applicant and the project engineer. Therefore, this analysis is valid only as long as the proposed data and parameters do not change.

AAQA
The emissions from the proposed equipment will not cause or contribute significantly to a violation of the State and National AAQS if compliance with the proposed conditions is maintained.

Attachments:
A. AAQA
B. Toxic emissions summary
C. Prioritization score
D. RMR Request
E. Miscellaneous

APPENDIX G

Total Hazardous Air Pollutant (HAP) Emissions from the Facility

Toxic Emissions for Moonlight Dairy (Facility S-5834)

The federal Clean Air Act lists 189 substances as potential Hazardous Air Pollutants (Clean Air Act Sec. 112(b)(1)). Any pollutant that may be emitted from the project and is on the federal New Source Review List and the federal Clean Air Act list has been evaluated. The following table includes a list of HAPs generated at dairies including the associated emission factor.

Hazardous Air Pollutant (HAP) Emissions		
HAP	lbs-milk cow-yr	Source
Methanol	1.35	UC Davis - *VOC Emission from Dairy Cows and their Excreta*, 2005
Carbon disulfide	0.027	Dr. Schmidt - *Dairy Emissions using Flux Chambers (Phase I & II)*, 2005
Eythylbenzene	0.003	
o-Xylene	0.005	
1,2-Dibromo-3chloropropane	0.011	
1,2,4-Trichlorobenzene	0.025	
Napthalene	0.012	
Hexachlorobutadiene	0.012	
Formaldehyde	0.005	
Acetaldehyde	0.029	
Chloroform	0.017	California State University Fresno (CSUF) - *Monitoring and Modeling of ROG at California Dairies*, 2005
Styrene	0.01	
Vinyl acetate[11]	0.08	Dr. Schmidt - *Dairy Emissions using Flux Chambers (Phase I & II)* & California State University Fresno (CSUF) - *Monitoring and Modeling of ROG at California Dairies*, 2005
Toluene[12]	0.162	
Cadmium	0.009	Air Resources Board's Profile No. 423, Livestock Operations Dust
Hexavalent Chromium	0.004	
Nickel	0.026	
Arsenic	0.005	
Cobalt	0.003	
Lead	0.033	
Total	**1.828**	

Although, some of the pollutants listed above may have been misidentified as HAPs due to similarities of many compounds consisting of very similar spikes (as measured through the gas Chromatograph Mass Spectroscopy - GCMS), all of these pollutants will be used in calculating the worst-case HAP emissions. Since many of the HAPs are VOCs installation of the digester system is expected to reduce these emissions; however, no control is being applied to these factors at this time in order to calculate the worst-case emissions.

The emission calculations are shown below:

[11] 0.01 + 0.07 = 0.08 lbs/hd-yr
[12] 0.012 + 0.15 = 0.162 lbs/hd-yr

HAP Emissions for Moonlight Dairy (Facility S-5834)						
Type of Cow	**Number of cows**		**Emission Factor lbs/hd-yr***		**lbs/yr**	**tons/yr**
Milking Cow	2,400	x	1.828	=	4,387	2.19
Dry Cow	325	x	1.123	=	365	0.18
Heifer (15-24 months)	800	x	0.786	=	629	0.31
Heifer (7-14 months)	800	x	0.686	=	549	0.27
Heifer (4-6 months)	200	x	0.621	=	124	0.06
Calf (0- 3 months)	350	x	0.584	=	204	0.10
Bulls	30	x	1.123	=	34	0.02
Total				=	**6,292**	**3.13**

* The emission factor has been adjusted for each type of cow based on the ratio of amount of manure generated for each cow.

Toxic Emissions for Digester Gas-Fired Flare at AgPower Visalia, LLC (Facility S-7831)

The following table provides the total toxic emissions calculated for the proposed digester gas-fired flare (S-7831-1). The total toxic emissions are calculated using emissions factors for toxics provided by the Technical Services Division of the SJVAPCD for combustion of digester gas in a flare and based on a maximum fuel input of 13.14 MMscf/yr for the proposed digester gas-fired flare.

Toxic Emissions for Digester Gas-Fired Flare*					
Pollutant Name	CAS #	Emission Factor (lb/MMScf)	Annual Usage (MMScf/yr)	Federal HAP Emissions (lb/yr)	Other Toxic Emissions (lb/yr)
Ammonia	7664417	4.80E-03	13.14	--	0.063072
Benzene	71432	2.77E-02	13.14	0.363978	
Chlorobenzene	108907	2.00E-04	13.14	0.002628	
Dichlorobenzene	106467	1.80E-03	13.14	0.023652	
Ethyl Benzene	100414	1.00E-03	13.14	0.01314	
Ethylene Dichloride	107062	1.40E-03	13.14	0.018396	
Formaldehyde	50000	2.04E-01	13.14	2.683188	
Hexane	110543	1.01E-02	13.14	0.132714	
Hydrogen Chloride	7647010	6.46E-01	13.14	8.48187	
Hydrogen Sulfide	7783064	2.15E-02	13.14	--	0.28251
Methylene Chloride	75092	1.00E-04	13.14	0.001314	
Methyl Ethyl Ketone**	78933	1.00E-04	13.14	--	0.001314
Perchloroethylene	127184	5.00E-04	13.14	0.00657	
Toluene	108883	1.01E-02	13.14	0.132714	
Trichloroethane	79005	1.00E-04	13.14	0.001314	
Trichlorethylene	79016	3.00E-04	13.14	0.003942	
Xylenes	1330207	4.50E-03	13.14	0.05913	
	Total Federal HAP Emissions (lb/yr)			**11.9 lb/yr**	

* The emissions factors for toxics from combustion of digester gas in flares were developed by San Diego County Air Pollution Control District Based on Pt Loma Raw Gas (8/23/1999).
**On December 19, 2005 the EPA removed methyl ethyl ketone (MEK) from the list of Federal HAPs.
***A clerical error led to the inadvertent addition of H_2S to the Section 112(b) list of Hazardous Air Pollutants but it was removed in 1991

Toxic Emissions for Digester Gas-Fired IC Engines at AgPower Visalia (Facility S-7831)

The following table provides the total toxic emissions calculated for the proposed digester gas-fired IC Engines (S-7831-2 & -3). The total toxic emissions are calculated using emissions factors for toxics provided by the Technical Services Division of the SJVAPCD for combustion of digester gas in IC engines and based on a conservative maximum fuel input of 76.00 MMscf/yr for each of the proposed digester gas-fired IC engines. (Notes: 76.00 MMscf/yr = 675 bhp x 24 hr/day x 365 day/yr x 2,545 Btu/hp-hr x 1 hp-hr_{in}/0.33 hp-hr_{out} x 1 scf/600 Btu x 1 MMscf/10^6 scf).

Toxic Emissions for Digester Gas-Fired IC Engines*					
Pollutant Name	CAS #	Emission Factor (lb/MMScf)	Annual Usage (MMScf/yr)	Federal HAP Emissions (lb/yr)	Other Toxic Emissions (lb/yr)
Ammonia	7664417	4.80E-03	152.00	--	0.7296
Benzene	71432	1.78E-01	152.00	27.0864	
Chlorobenzene	108907	2.00E-04	152.00	0.0304	
Dichlorobenzene	106467	1.80E-03	152.00	0.2736	
Ethyl Benzene	100414	1.00E-03	152.00	0.152	
Ethylene Dichloride	107062	1.40E-03	152.00	0.2128	
Formaldehyde	50000	1.31E+00	152.00	199.4544	
Hexane	110543	6.48E-02	152.00	9.8496	
Hydrogen Chloride	7647010	6.46E-01	152.00	98.116	
Hydrogen Sulfide	7783064	2.15E-02	152.00	--	3.268
Methylene Chloride	75092	1.00E-04	152.00	0.0152	
Methyl Ethyl Ketone**	78933	1.00E-04	152.00	--	0.0152
Perchloroethylene	127184	5.00E-04	152.00	0.076	
Toluene	108883	6.48E-02	152.00	9.8496	
Trichloroethane	79005	1.00E-04	152.00	0.0152	
Trichlorethylene	79016	3.00E-04	152.00	0.0456	
Xylenes	1330207	4.50E-03	152.00	0.684	
	Total Federal HAP Emissions (lb/yr)			**345.9 lb/yr**	

* The emissions factors for toxics from combustion of digester gas in IC engines were developed by San Diego County Air Pollution Control District Based on Pt Loma Raw Gas (8/23/1999).
**On December 19, 2005 the EPA removed methyl ethyl ketone (MEK) from the list of Federal HAPs.
***A clerical error led to the inadvertent addition of H2S to the Section 112(b) list of Hazardous Air Pollutants but it was removed in 1991

Total HAP Emissions for Moonlight Dairy (Facility S-5834) and Digester Gas-Fired Flare and IC Engines at AgPower Visalia, LLC (Facility S-7831)

In addition to the HAPs calculated above, the emergency IC engine at the dairy (S-5834-9-0) may also contribute to the total HAP emissions from the facility. The emergency IC engine has a PE of 39 lb-PM_{10}/yr and 94 lb-VOC/yr. Very conservatively assuming that all PM_{10} and VOC emissions from the emergency IC engine are HAPs, the total HAP Emissions for the stationary source are calculated as follows:

6,292 lb/yr + (39 lb/yr+ 94 lb/yr) + 11.9 lb/yr + 345.9 lb/yr = **6,783 lb/yr (3.39 ton/yr)**

Since total facility-wide HAP emissions from this stationary source are less than 10.0 tons/yr, this stationary source is not a major HAP source.

APPENDIX H

Draft ATCs
(S-5834-3-2 and S-7831-1-0, -2-0, & -3-0)

San Joaquin Valley
Air Pollution Control District

AUTHORITY TO CONSTRUCT

PERMIT NO: S-5834-3-2

ISSUANCE DATE: DRAFT

LEGAL OWNER OR OPERATOR: MOONLIGHT DAIRY
MAILING ADDRESS: 5061 AVENUE 280
VISALIA, CA 93277

LOCATION: 5061 AVENUE 280
VISALIA, CA 93277

EQUIPMENT DESCRIPTION:
MODIFICATION OF LIQUID MANURE HANDLING SYSTEM CONSISTING OF A MECHANICAL SEPARATOR AND 4 STORAGE POND(S)(25' X 25' X 20', 120' X 750' X 20', 180' X 1080' X 20', 180' X 320' X 20'). MANURE IS LAND APPLIED THROUGH FLOOD IRRIGATION: ALLOW MANURE CURRENTLY BEING FLUSHED TO THE LAGOONS TO BE SENT TO AN ANAEROBIC DIGESTER AND RELOCATE MECHANICAL SEPARATOR TO AFTER THE DIGESTER

CONDITIONS

1. {3215} Upon presentation of appropriate credentials, a permittee shall allow an authorized representative of the District to enter the permittee's premises where a permitted source is located or emissions related activity is conducted, or where records must be kept under condition of the permit. [District Rule 1070]
2. {3216} Upon presentation of appropriate credentials, a permittee shall allow an authorized representative of the District to have access to and copy, at reasonable times, any records that must be kept under the conditions of the permit. [District Rule 1070]
3. {3508} If a licensed veterinarian, a certified nutritionist, the California Department of Food and Agriculture (CDFA), or the United States Department of Agriculture (USDA) determines that any VOC mitigation measure (with a Rule 4570 reference) is detrimental to animal health and needs to be suspended, the Permittee must notify the District in writing within forty-eight (48) hours of the determination including the duration and the specific health condition requiring the mitigation measure to be suspended. If the situation is expected to exist longer than a thirty-day (30) period, the owner/operator shall submit a new emission mitigation plan designating a mitigation measure to be implemented in lieu of the suspended mitigation measure. [District Rule 4570]
4. {3624} Permittee shall remove solids from the waste system with a solid separator system, prior to the waste entering the lagoon. [District Rule 4570]

CONDITIONS CONTINUE ON NEXT PAGE

YOU MUST NOTIFY THE DISTRICT COMPLIANCE DIVISION AT (661) 392-5500 WHEN CONSTRUCTION IS COMPLETED AND PRIOR TO OPERATING THE EQUIPMENT OR MODIFICATIONS AUTHORIZED BY THIS AUTHORITY TO CONSTRUCT. This is NOT a PERMIT TO OPERATE. Approval or denial of a PERMIT TO OPERATE will be made after an inspection to verify that the equipment has been constructed in accordance with the approved plans, specifications and conditions of this Authority to Construct, and to determine if the equipment can be operated in compliance with all Rules and Regulations of the San Joaquin Valley Unified Air Pollution Control District. Unless construction has commenced pursuant to Rule 2050, this Authority to Construct shall expire and application shall be cancelled two years from the date of issuance. The applicant is responsible for complying with all laws, ordinances and regulations of all other governmental agencies which may pertain to the above equipment.

Seyed Sadredin, Executive Director/APCO

DRAFT

DAVID WARNER, Director of Permit Services
S-5834-3-2 : Nov 10 2010 11:10AM – GILLS : Joint Inspection NOT Required

5. {3643} Permittee shall not allow liquid animal waste to stand in the fields for more than twenty-four (24) hours after irrigation. [District Rule 4570]

6. {3644} Permittee shall maintain records to demonstrate liquid animal waste does not stand in the fields for more than twenty-four (24) hours after irrigation. [District Rule 4570]

7. The liquid manure handling system shall handle flush manure from no more than 2,400 milk cows, 325 dry cows, 800 heifers (15-24 months), 800 heifers (7-14 months), 200 heifers (3-6 months), 350 calves (0-3 months), and 30 bulls. [District Rule 2201]

8. The liquid manure that is handled at this dairy shall be processed in an anaerobic digester that is approved by the District. [District Rule 2201]

9. Liquid manure shall be mixed with irrigation water at a ratio in compliance with the facility nutrient management plan and applied to cropland at agronomic rates in accordance with the requirements of Regional Water Quality Control Board. [District Rule 2201]

10. All records shall be kept and maintained for a minimum of five (5) years and shall be made available to the APCO, ARB and EPA upon request. [District Rules 2201 and 4570]

11. {3658} This permit does not authorize the violation of any conditions established for this facility (e.g. maximum number of animals or animal units, construction requirements, etc.) in the Conditional Use Permit (CUP), Special Use Permit (SUP), Site Approval, Site Plan Review (SPR), or other approval documents issued by a local, state, or federal agency. [District Rules 2070 and 2080]

12. The equipment and operations of facility S-5834 and S-7831 are considered the same stationary source for the purposes of determining applicability and requirements of Rule 2201, New and Modified Stationary Source Review. [District Rule 2201]

San Joaquin Valley
Air Pollution Control District

AUTHORITY TO CONSTRUCT

DRAFT

PERMIT NO: S-7831-1-0

ISSUANCE DATE: DRAFT

LEGAL OWNER OR OPERATOR: AGPOWER VISALIA, LLC
MAILING ADDRESS: 6920 SALASHIAN PARKWAY A-102
FERNDALE, WA 98248

LOCATION: 5061 AVE 280 (W CALDWELL AVE)
VISALIA, CA 93277

EQUIPMENT DESCRIPTION:
ANDGAR PLUG FLOW MESOPHILIC ANAEROBIC DIGESTER SYSTEM CONSISTING OF A PRE-DIGESTER SETTLING BASIN, AN IN-GROUND CONCRETE VESSEL (73' X 290 ' X 16'), ONE MECHANICAL SEPARATOR, AND ONE 9.0 MMBTU/HR ANDGAR-8" DIGESTER GAS-FIRED ENCLOSED BACKUP FLARE SERVED BY AN AIR INJECTION H2S REMOVAL SYSTEM (OR EQUIVALENT H2S REMOVAL SYSTEM)

CONDITIONS

1. {1407} All equipment shall be maintained in good operating condition and shall be operated in a manner to minimize emissions of air contaminants into the atmosphere. [District Rule 2201]
2. {98} No air contaminant shall be released into the atmosphere which causes a public nuisance. [District Rule 4102]
3. {14} Particulate matter emissions shall not exceed 0.1 grains/dscf in concentration. [District Rule 4201]
4. The plug flow anaerobic digester system shall be configured and operated in accordance with National Resource Conservation Service (NRCS) California Field Office Technical Guide Code 366: Anaerobic Digester - Controlled Temperature and shall have an average retention time of at least twenty (20) days. [District Rule 2201]
5. The permittee shall maintain records of the design specifications and calculations, including Minimum Treatment Volume (MTV), Hydraulic Retention Time (HRT), and volatile solids loading rate, of the anaerobic digester system in order to demonstrate that each digester has been designed and is operating in accordance with the applicable National Resource Conservation Service (NRCS) technical guide. [District Rules 1070 and 2201]
6. Only digester gas shall be combusted in the flare. [District Rule 2201]
7. No air contaminant shall be discharged into the atmosphere from the flare for a period or periods aggregating more than three minutes in any one hour which is as dark as, or darker than, Ringelmann 1/4 or 5% opacity. [District Rules 2201 and 4101]

CONDITIONS CONTINUE ON NEXT PAGE

YOU MUST NOTIFY THE DISTRICT COMPLIANCE DIVISION AT (661) 392-5500 WHEN CONSTRUCTION IS COMPLETED AND PRIOR TO OPERATING THE EQUIPMENT OR MODIFICATIONS AUTHORIZED BY THIS AUTHORITY TO CONSTRUCT. This is NOT a PERMIT TO OPERATE. Approval or denial of a PERMIT TO OPERATE will be made after an inspection to verify that the equipment has been constructed in accordance with the approved plans, specifications and conditions of this Authority to Construct, and to determine if the equipment can be operated in compliance with all Rules and Regulations of the San Joaquin Valley Unified Air Pollution Control District. Unless construction has commenced pursuant to Rule 2050, this Authority to Construct shall expire and application shall be cancelled two years from the date of issuance. The applicant is responsible for complying with all laws, ordinances and regulations of all other governmental agencies which may pertain to the above equipment.

Seyed Sadredin, Executive Director / APCO

DRAFT

DAVID WARNER, Director of Permit Services
S-7831-1-0 : Nov 8 2010 2:16PM – NORMANR : Joint Inspection NOT Required

8. The amount of digester combusted in the flare shall neither exceed 0.36 MMscf in any one day nor 13.14 MMscf in any consecutive 365-day period. [District Rule 2201]

9. The flare shall be equipped with an operational, non-resettable, totalizing mass or volumetric fuel flow meter or other District-approved alternative method to measure the amount of gas combusted in the flare. [District Rule 2201]

10. Permittee shall maintain daily and annual records of amount of the quantity of digester gas combusted in the flare in MMscf. [District Rule 1070 and 2201]

11. Emissions from the flare shall not exceed any of the following limits: 0.06 lb-NOx/MMBtu, 0.008 lb-PM10/MMBtu, 0.37 lb-CO/MMBtu, or 0.0051 lb-VOC/MMBtu. [District Rules 2201 and 4311]

12. A flame shall be present at all times whenever combustible gases are vented through the flare. [District Rule 4311]

13. The flare outlet shall be equipped with an automatic ignition system, or shall operate with a pilot flame present at all times when combustible gases are vented through the flare, except during purge periods for automatic-ignition equipped flares. [District Rule 4311]

14. Unless the flare is equipped with a flow (pressure) sensing ignition system, the flare shall be equipped and operated with a heat sensing device such as a thermocouple, ultraviolet beam sensor, infrared sensor, or an equivalent device, capable of continuously detecting at least one pilot flame. [District Rule 4311]

15. Flares that use flow (pressure) sensing automatic ignition systems and which do not use a continuous flame pilot shall use purge gas for purging. [District Rule 4311]

16. Source testing to measure NOx and VOC emissions from the digester-fired flare shall be conducted within 120 days of initial start-up and at least once every twelve (12) months, thereafter. [District Rules 2201 and 4311]

17. For source test purposes, NOx emissions from the flare shall be determined using EPA Method 19 on a heat input basis, or EPA Method 3A, EPA Method 7E, or ARB Method 100 on a ppmv basis. [District Rule 4311]

18. For source test purposes, VOC emissions from the flare shall be determined using EPA Method 25 or 25a. [District Rule 4311]

19. Stack gas oxygen (O2) shall be determined using EPA Method 3A, EPA Method 7E, or ARB Method 100. [District Rule 4311]

20. Source testing shall be conducted using the methods and procedures approved by the District. The District must be notified at least 30 days prior to any compliance source test, and a source test plan must be submitted for approval at least 30 days prior to testing. [District Rules 1081 and 4311]

21. The results of each source test shall be submitted to the District within 45 days of completion of the source test. [District Rules 1081 and 4311]

22. The applicant has requested to install an experimental sulfur removal system that will require a commissioning period prior to achieving steady state operation and optimal removal of sulfur from the digester gas. The owner/operator shall minimize the sulfur content of the gas to the maximum extent possible during commissioning of the sulfur removal system. Conditions #23 through #29 shall apply only during the commissioning period as defined below. Unless otherwise indicated, all other conditions limiting the sulfur content of the digester gas shall apply after the commissioning period has ended. [District Rule 2201]

23. Commissioning period for the sulfur removal system shall commence when the digester begins to produce a continuous flow of gas at a rate of least 1.0 cfm. The commissioning period shall terminate when the sulfur removal system has completed initial performance testing and reached steady operation with a digester gas sulfur concentration not exceeding 200 ppmv as H2S. The duration of the commissioning period shall not exceed 60 days. At the earliest feasible opportunity, the air injection rate of sulfur removal system shall be adjusted to minimize the sulfur content of the digester gas. [District Rule 2201]

24. During commissioning of the sulfur removal system, the sulfur content of the digester gas combusted in this unit shall not exceed 4,000 ppmv during the first 30 days of commissioning, shall not exceed 2,500 ppmv during the next 15 days of commissioning, and shall not exceed 1,000 ppmv during any remaining days of the commissioning period. [District Rules 2201 and 4801]

CONDITIONS CONTINUE ON NEXT PAGE

25. No more than one of permit units S-7831-1, -2, and -3 (digester gas-fired flare and IC engines) shall operate at any one time until the measured sulfur content of the digester gas is 1,000 ppmv or less for at least three consecutive days. [District Rule 2201]

26. During commissioning of the sulfur removal system, SOx (as SO2) from this unit shall not exceed 140.7 lbs in any day. SOx emissions shall be calculated based on the average measured sulfur content of the gas (ppmv) and the total amount of gas (scf) combusted in the unit using the following equation: [average measured sulfur concentration (ppmv)] x [total gas combusted (scf)] x 1.688 x 10E-7. [District Rule 2201]

27. During commissioning of the sulfur removal system, the permittee shall measure and record the sulfur content of the digester gas at least once per day using the methods approved in this permit. [District Rule 2201]

28. The permittee shall record the total number of days of commissioning of the sulfur removal system, the operating schedule and total amount of time this unit operates during commissioning of the sulfur removal system, and the total amount of gas combusted in permit units S-7831-1, -2, and -3 (digester gas-fired flare and IC engines) each day of the commissioning period. [District Rule 2201]

29. Coincident with the end of the commissioning period for the sulfur removal system, the sulfur content of the digester gas shall comply with the limits specified in conditions #30 and #31 below. [District Rule 2201]

30. The sulfur content of the digester gas combusted in this flare shall not exceed 50 ppmv as H2S except as provided below. [District Rules 2201 and 4801]

31. The applicant has requested to install an experimental sulfur removal system. A six-month test period will be allowed for the experimental sulfur removal system after startup. The six-month test period shall begin with commencement of the commissioning period for the sulfur removal system and any time required for commissioning of the sulfur removal system shall be counted in the six-month test period. During the test period a digester gas sulfur content greater than 50 ppmv but not exceeding 200 ppmv will not constitute a violation of the permit provided that the sulfur removal system is operated to minimize the sulfur content to the maximum extent feasible. [District Rule 2201]

32. If the sulfur content of the digester gas continues to exceed 50 ppmv as H2S by the end of the six-month test period for the experimental sulfur removal system, the permittee shall submit details to the District of an additional polishing scrubber or an alternative sulfur removal system to meet the required 50 ppmv limit within 30 days of the end of the test period. If the District determines that an ATC application is required for the equipment, the applicant shall submit an ATC application within 15 days of the District's determination and the applicant shall request expedited processing of the required ATC permit and shall pay any required fees for expedited processing. The equipment to meet the sulfur content limit shall be installed within 90 days of approval by the District or issuance of the ATC; if the permit units controlled by the sulfur removal system/scrubber are not operating the District may approve an extension of this period. [District Rule 2201]

33. The sulfur content of the digester gas combusted in this flare shall be monitored and recorded monthly. After eight (8) consecutive monthly tests show compliance, the digester gas sulfur content monitoring frequency may be reduced to once every calendar quarter. If quarterly monitoring shows a violation of the digester gas sulfur content limit of this permit, then monthly monitoring shall resume and continue until eight consecutive months of monitoring show compliance with the gas sulfur content limit. Once compliance with the gas sulfur content limit is shown for eight consecutive months, then the monitoring frequency may return to quarterly. Monitoring of the sulfur content of the digester gas shall not be required if the flare does not operate during that period. Records of the results of monitoring of the digester gas sulfur content shall be maintained. [District Rule 2201]

34. Monitoring of the digester gas sulfur content shall be performed using a Testo 350 XL portable emission monitor; District-approved in-line H2S monitors; gas detection tubes calibrated for H2S; District-approved source test methods, including EPA Method 11 or EPA Method 15, ASTM Method D1072, D4084, and D5504; or an alternative method approved by the District. Prior to utilization of in-line monitors to demonstrate compliance with the digester gas sulfur content limit of this permit, the permittee shall submit details of the proposed monitoring system, including the make, model, and detection limits, to the District and obtain District approval for the proposed monitor(s). [District Rule 2201]

35. Prior to installation of the flare, the operator shall submit a flare minimization plan in accordance with District Rule 4311. [District Rule 4311]

CONDITIONS CONTINUE ON NEXT PAGE

36. The flare minimization plan shall include all information required by District Rule 4311, including but not limited to: 1) A description and technical specifications for each flare; 2) Detailed process flow diagrams of all upstream equipment and process units venting to each flare; 3) A description of equipment, processes, or procedures the operator plans to install or implement to eliminate or minimize flaring and planned date of installation or implementation; 4) An evaluation of prevention measures to reduce flaring that has occurred or may be expected to occur during planned major maintenance activities, including startup and shutdown; 5) An evaluation of preventative measures to reduce flaring that may be expected to occur due to issues of gas quantity and quality; 6) An evaluation of preventative measures to reduce flaring caused by the recurrent failure of equipment or a normal operating process; and 7) Any other information requested by the APCO as necessary for determination of compliance with applicable provisions of Rule 4311. [District Rule 4311]

37. The operator shall submit an updated flare minimization plan for each flare to the APCO for approval every five years after the initial submittal and prior to installing any equipment that would require an ATC and would impact the emissions from the flare. [District Rule 4311]

38. Flaring is prohibited unless it is consistent with an approved flare minimization plan, pursuant to Section 6.5 of District Rule 4311. This standard shall not apply if the APCO determines that such flaring is caused by an emergency and is necessary to prevent an accident, hazard, or release of gas directly to the atmosphere. [District Rule 4311]

39. The operator of a flare subject to a flare minimization plan shall notify the APCO of an unplanned flaring event within 24 hours after the start of the next business day or within 24 hours of their discovery, which ever occurs first. The notification shall include the flare source identification, the start date and time, and the end date and time. [District Rule 4311]

40. Copies of approved flare minimization plan shall be made readily available to the APCO, ARB, and EPA upon request for a minimum of 5 years. [District Rule 4311]

41. All records shall be maintained and retained on-site for a period of at least 5 years and shall be made available for District inspection upon request. [District Rules 1070 and 4311]

42. The permittee shall obtain written District approval for the use of any equivalent equipment not specifically approved by this Authority to Construct. Approval of the equivalent equipment shall be made only after the District's determination that the submitted design and performance of the proposed alternate equipment is equivalent to the specifically authorized equipment. [District Rule 2201]

43. The permittee's request for approval of equivalent equipment shall include, as applicable, the make, model, manufacturer's maximum rating, manufacturer's guaranteed emission rates, equipment diagram(s)/drawing(s), and operational characteristics/parameters. [District Rule 2010]

44. Alternate equipment shall be of the same class and category of source as the equipment authorized by the Authority to Construct. [District Rule 2201]

45. No emission factor and no emissions shall be greater for the alternate equipment than for the proposed equipment. No changes in the hours of operation, operating rate, throughput, or firing rate may be authorized for any alternate equipment. [District Rule 2201]

46. The equipment and operations of facility S-5834 and S-7831 are considered the same stationary source for the purposes of determining applicability and requirements of Rule 2201, New and Modified Stationary Source Review. [District Rule 2201]

San Joaquin Valley
Air Pollution Control District

AUTHORITY TO CONSTRUCT

DRAFT

PERMIT NO: S-7831-2-0

ISSUANCE DATE: DRAFT

LEGAL OWNER OR OPERATOR: AGPOWER VISALIA, LLC
MAILING ADDRESS: 6920 SALASHIAN PARKWAY A-102
FERNDALE, WA 98248

LOCATION: 5061 AVE 280 (W CALDWELL AVE)
VISALIA, CA 93277

EQUIPMENT DESCRIPTION:
675 BHP GUASCOR MODEL SFGLD 360 DIGESTER GAS-FIRED LEAN BURN IC ENGINE WITH A FLORIDA SYNGAS PLASMA ARC REFORMER FOR HYDROGEN/SYNGAS INJECTION SERVED BY AN AIR INJECTION H2S REMOVAL SYSTEM AND AN IRON SPONGE H2S SCRUBBER (OR EQUIVALENT H2S REMOVAL SYSTEM) POWERING AN ELECTRICAL GENERATOR

CONDITIONS

1. {98} No air contaminant shall be released into the atmosphere which causes a public nuisance. [District Rule 4102]
2. {14} Particulate matter emissions shall not exceed 0.1 grains/dscf in concentration. [District Rule 4201]
3. {15} No air contaminant shall be discharged into the atmosphere for a period or periods aggregating more than three minutes in any one hour which is as dark as, or darker than, Ringelmann 1 or 20% opacity. [District Rule 4101]
4. {1898} The exhaust stack shall vent vertically upward. The vertical exhaust flow shall not be impeded by a rain cap (flapper ok), roof overhang, or any other obstruction. [District Rule 4102]
5. {3202} This engine shall be operated and maintained in proper operating condition per the manufacturer's requirements as specified on the Inspection and Monitoring (I&M) plan submitted to the District. [District Rule 4702]
6. {3203} This engine shall be operated within the ranges that the source testing has shown result in pollution concentrations within the emissions limits as specified on this permit. [District Rule 4702]
7. This engine/generation system shall be fired only on digester gas. [District Rules 2201]

CONDITIONS CONTINUE ON NEXT PAGE

YOU MUST NOTIFY THE DISTRICT COMPLIANCE DIVISION AT (661) 392-5500 WHEN CONSTRUCTION IS COMPLETED AND PRIOR TO OPERATING THE EQUIPMENT OR MODIFICATIONS AUTHORIZED BY THIS AUTHORITY TO CONSTRUCT. This is NOT a PERMIT TO OPERATE. Approval or denial of a PERMIT TO OPERATE will be made after an inspection to verify that the equipment has been constructed in accordance with the approved plans, specifications and conditions of this Authority to Construct, and to determine if the equipment can be operated in compliance with all Rules and Regulations of the San Joaquin Valley Unified Air Pollution Control District. Unless construction has commenced pursuant to Rule 2050, this Authority to Construct shall expire and application shall be cancelled two years from the date of issuance. The applicant is responsible for complying with all laws, ordinances and regulations of all other governmental agencies which may pertain to the above equipment.

Seyed Sadredin, Executive Director/APCO

DRAFT

DAVID WARNER, Director of Permit Services
S-7831-2-0 : Nov 8 2010 2:16PM – NORMANR : Joint Inspection NOT Required

8. The applicant has requested to install an experimental sulfur removal system that will require a commissioning period prior to achieving steady state operation and optimal removal of sulfur from the digester gas. The owner/operator shall minimize the sulfur content of the gas to the maximum extent possible during commissioning of the sulfur removal system. Conditions #9 through #15 shall apply only during the commissioning period as defined below. Unless otherwise indicated, all other conditions limiting the sulfur content of the digester gas shall apply after the commissioning period has ended. [District Rule 2201]

9. Commissioning period for the sulfur removal system shall commence when the digester begins to produce a continuous flow of gas at a rate of least 1.0 cfm. The commissioning period shall terminate when the sulfur removal system has completed initial performance testing and reached steady operation with a digester gas sulfur concentration not exceeding 200 ppmv as H2S. The duration of the commissioning period shall not exceed 60 days. At the earliest feasible opportunity, the air injection rate of sulfur removal system shall be adjusted to minimize the sulfur content of the digester gas. [District Rule 2201]

10. During commissioning of the sulfur removal system, the sulfur content of the digester gas combusted in this unit shall not exceed 4,000 ppmv during the first 30 days of commissioning, shall not exceed 2,500 ppmv during the next 15 days of commissioning, and shall not exceed 1,000 ppmv during any remaining days of the commissioning period. [District Rules 2201 and 4801]

11. No more than one of permit units S-7831-1, -2, and -3 (digester gas-fired flare and IC engines) shall operate at any one time until the measured sulfur content of the digester gas is 1,000 ppmv or less for at least three consecutive days. [District Rule 2201]

12. The sulfur content of the digester gas stream(s) that enter the hydrogen/syngas reformer(s) shall not exceed 200 ppmv. The digester gas stream(s) that enter the hydrogen/syngas reformer(s) shall continue to be scrubbed separately until the sulfur removal system reduces the measured sulfur content of the digester gas to 200 ppmv or less for at least three consecutive days. [District Rule 2201]

13. During commissioning of the sulfur removal system, the permittee shall measure and record the sulfur content of the primary digester gas stream and the separate scrubbed digester gas stream(s) for use in the hydrogen/syngas reformer(s) at least once per day using the methods approved in this permit. [District Rule 2201]

14. The permittee shall record the total number of days of commissioning of the sulfur removal system, the operating schedule and total amount of time this unit operates during commissioning of the sulfur removal system, and the total amount of gas combusted in permit units S-7831-1, -2, and -3 (digester gas-fired flare and IC engines) each day of the commissioning period. [District Rule 2201]

15. Coincident with the end of the commissioning period for the sulfur removal system, the sulfur content of the digester gas shall comply with the limits specified in conditions #16 and #17 below. [District Rule 2201]

16. The sulfur content of the digester gas used as fuel in this engine shall not exceed 50 ppmv as H2S except as provided below. [District Rules 2201 and 4801]

17. The applicant has requested to install an experimental sulfur removal system. A six-month test period will be allowed for the experimental sulfur removal system after startup. The six-month test period shall begin with commencement of the commissioning period for the sulfur removal system and any time required for commissioning of the sulfur removal system shall be counted in the six-month test period. During the test period a digester gas sulfur content greater than 50 ppmv but not exceeding 200 ppmv will not constitute a violation of the permit provided that the sulfur removal system is operated to minimize the sulfur content to the maximum extent feasible. [District Rule 2201]

18. If the sulfur content of the digester gas continues to exceed 50 ppmv as H2S by the end of the six-month test period for the experimental sulfur removal system, the permittee shall submit details to the District of an additional polishing scrubber or an alternative sulfur removal system to meet the required 50 ppmv limit within 30 days of the end of the test period. If the District determines that an ATC application is required for the equipment, the applicant shall submit an ATC application within 15 days of the District's determination and the applicant shall request expedited processing of the required ATC permit and shall pay any required fees for expedited processing. The equipment to meet the sulfur content limit shall be installed within 90 days of approval by the District or issuance of the ATC; if the permit units controlled by the sulfur removal system/scrubber are not operating the District may approve an extension of this period. [District Rule 2201]

19. This engine shall be equipped with an operational non-resettable elapsed time meter. [District Rules 2201 and 4702]

CONDITIONS CONTINUE ON NEXT PAGE

20. {1897} This engine shall be equipped with either a positive crankcase ventilation (PCV) system that recirculates crankcase emissions into the air intake system for combustion, or a crankcase emissions control device of at least 90% control efficiency. [District Rule 2201]

21. This engine shall be operated in a lean-burn configuration maintaining an exhaust stream oxygen (O2) concentration of 8% per volume or greater prior to any exhaust stream control device. The District may approve a lower exhaust oxygen concentration if compliance with the BACT requirement for NOx is demonstrated at the lower level. [District Rule 2201]

22. Emissions from this IC engine shall not exceed any of the following limits (except as provided in conditions 23-26 below): 0.15 g-NOx/bhp-hr (NOx referenced as NO2), 2.20 g-CO/bhp-hr, 0.20 g-VOC/bhp-hr (VOC referenced as methane), 0.07 g-PM10/bhp-hr. [District Rules 2201 and 4702]

23. NOx emissions (as NO2) from the engine in excess of 0.15 g/bhp-hr but not exceeding 0.60 g/bhp-hr shall not constitute a violation of this permit provided that NOx emissions are limited to the lowest achievable emission rate to satisfy BACT. BACT for NOx from this engine shall consist of all other emission limitations and operational and design conditions contained in this permit. The final BACT level for NOx shall be determined to the satisfaction of the Air Pollution Control Officer in accordance with District Rule 2201 and the District's BACT policy, after at least 12 months of operating history and an official compliance source test. [District Rule 2201]

24. If within the first 12 months of operation the applicant decides that continued operation of the hydrogen injection system has proven infeasible, the applicant may provide a written report explaining why continued operation of the hydrogen injection system has proven infeasible and submit a written request to discontinue the BACT determination. If the District agrees that continued operation of the hydrogen injection system has proven infeasible, the BACT determination period may be terminated prior to completing the first 12 months of operation. [District Rule 2201]

25. If NOx emissions from the engine continue to exceed 0.15 g/bhp-hr after the BACT determination period, the permittee shall have 60 days to submit a report containing all monitoring and source test information to the District. The report shall also include an explanation of the steps taken to operate and maintain the engine in such a manner as to minimize NOx emissions and a detailed analysis of all factors that prohibit compliance with the NOx emissions limit. In the report, the permittee may also propose a final BACT emission limit for NOx for inclusion in this permit. The monitoring data and source test information gathered in accordance with this permit may be shared with other technical experts so their input can be considered when determining the final BACT limit for NOx that can be consistently achieved. [District Rule 2201]

26. The District shall establish the final BACT limit for NOx, including any applicable averaging periods, and revise the applicable limit contained in the permit within 60 days of the successful completion of the BACT determination period or receipt of the report from the permittee. Within 30 days of receipt of the District's determination, the permittee shall submit an Authority to Construct application to incorporate the revised emissions limit(s). In no case shall the final BACT NOx emission limitation be higher than 0.60 g-NOx/bhp-hr. The engine shall be allowed to continue to operate after the BACT evaluation period has ended and before the new Authority to Construct permit has been issued provided that NOx (as NO2) emissions from the engine do not exceed either of the following limits: 1) 0.60 g-NOx/bhp-hr and 2) 65 ppmv NOx @ 15% O2. [District Rules 2201 and 4702]

27. If the engine demonstrates reasonably reliable compliance with the 0.15 g/bhp-hr NOx emissions limit during the BACT evaluation period, this limit shall be deemed BACT for the installation. [District Rule 2201]

28. The hydrogen/syngas reformer shall be designed to deliver sufficient hydrogen (H2) to comprise at least 11% of the total engine fuel by volume and shall be operated to deliver sufficient hydrogen to allow stable operation of the engine in a lean burn configuration with at least 8% O2 in the exhaust. [District Rule 2201]

29. The hydrogen/syngas reformer shall be designed to be tolerant of the concentration of the concentration of sulfur and other contaminants in the digester gas that is reformed and shall be maintained and replaced in accordance with the recommendations of the manufacturer or emission control supplier. Records of maintenance and replacement of the reformer shall be maintained. [District Rule 2201]

CONDITIONS CONTINUE ON NEXT PAGE

30. The composition of the fuel gas (i.e. CH4, CO2, H2, CO) that enters the engine after a portion has been reformed into hydrogen shall be sampled and analyzed during times in which NOx emissions are being source tested. The composition of the fuel gas that enters the engine after a portion has been reformed into hydrogen shall be either monitored or sampled and analyzed during times in which NOx emissions are monitored with a portable analyze. Records of the results of the analysis and monitoring of the fuel gas shall be maintained. [District Rule 2201 and 4702]

31. The HHV and LHV of the fuel gas samples taken in conjunction with source tests shall be determined using ASTM D3588, ASTM 1826, ASTM 1945, or an alternative method approved by the District. [District Rule 2201]

32. Air-to-fuel ratio controller(s) shall be maintained and operated appropriately in order to ensure proper operation of the engine and control device to minimize emissions at all times. [District Rule 2201 and 40 CFR 60, Subpart JJJJ]

33. During the 12-month BACT determination period, if requested by the District, source testing to measure NOx and CO emissions from this unit for monitoring purposes shall be conducted using methods and procedures approved by the District. [District Rules 1081, 2201, and 4702]

34. Official source testing to demonstrate compliance with NOx, CO, and VOC emissions limits from this unit shall be conducted within 365 days of initial start-up using the methods specified in this permit. [District Rules 1081, 2201, and 4702 and 40 CFR 60, Subpart JJJJ]

35. Source testing to measure NOx, CO, and VOC emissions from this unit shall be conducted at least once every 8,760 hours of operation or 24 months, whichever comes first. [District Rules 1081, 2201, and 4702 and 40 CFR 60, Subpart JJJJ]

36. {3791} Emissions source testing shall be conducted with the engine operating either at conditions representative of normal operations or conditions specified in the Permit to Operate. [District Rule 4702]

37. For official emissions source testing, the arithmetic average of three 60-consecutive-minute test runs shall apply. Each test run shall be conducted within 10 percent of 100 percent peak (or the highest achievable) load. If two of three runs are above an applicable limit, the test cannot be used to demonstrate compliance with an applicable limit. VOC emissions shall be reported as both methane and as propane. VOC, NOx, and CO concentrations shall be reported in ppmv, corrected to 15% oxygen. [District Rule 4702 and 40 CFR 60, Subpart JJJJ]

38. The following methods shall be used for official source testing: NOx (ppmv) - EPA Method 7E, CO (ppmv) - EPA Method 10, VOC (ppmv) - EPA Method 25A or 25B, stack gas oxygen - EPA Method 3 or 3A, stack gas velocity - EPA Method 2 or EPA Method 19, stack gas moisture content - EPA Method 4. Alternative test methods as approved by EPA and the District may also be used to address the source testing requirements of this permit. [District Rules 1081 and 4702 and 40 CFR 60, Subpart JJJJ]

39. {109} Source testing shall be conducted using the methods and procedures approved by the District. The District must be notified at least 30 days prior to any compliance source test, and a source test plan must be submitted for approval at least 15 days prior to testing. [District Rule 1081]

40. The results of each source test shall be submitted to the District and EPA within 60 days after completion of the source test. [District Rule 1081 and 40 CFR 60, Subpart JJJJ]

41. To determine if the measured emissions concentration complies with the g/bhp emissions limits specified in the this permit, the fuel flow rate to the engine and engine load or generator power output shall be monitored and recorded during source testing. If the generator power output is used, the manufacturer's guaranteed efficiency of the generator or 95%, whichever is higher, shall be used to calculate the load of the engine. The emission rate (mass/time) shall be determined by multiplying the measured emissions concentration and stack flow rate determined during source testing. The g/bhp-hr emission factors for NOx, CO, and VOC as propane shall be determined in accordance with the equations given in 40 CFR § 60.4244. The g/bhp-hr emission factors for VOC as methane shall be determined using the following equation: ER = (Cd x 6.667E-4 x Q x T)/(HP-hr); Where: ER = Emission rate of VOC as methane in g/HP-hr, Cd= VOC concentration as methane in ppmv, and other terms are the same as the equations given in 40 CFR § 60.4244. The District may approve other procedures to determine the engine load and pollutant g/bhp-hr emission factors. [District Rule 2201 and 40 CFR 60, Subpart JJJJ]

CONDITIONS CONTINUE ON NEXT PAGE

42. The sulfur content of the digester gas used to fuel the engine shall be monitored and recorded monthly. After eight (8) consecutive monthly tests show compliance, the fuel sulfur content monitoring frequency may be reduced to once every calendar quarter. If quarterly monitoring shows a violation of the fuel sulfur content limit of this permit, then monthly monitoring shall resume and continue until eight consecutive months of monitoring show compliance with the fuel sulfur content limit. Once compliance with the fuel sulfur content limit is shown for eight consecutive months, then the monitoring frequency may return to quarterly. Monitoring of the sulfur content of the digester gas fuel shall not be required if the engine does not operate during that period. Records of the results of monitoring of the digester gas fuel sulfur content shall be maintained. [District Rule 2201]

43. Monitoring of the digester gas sulfur content shall be performed using a Testo 350 XL portable emission monitor; District-approved in-line H2S monitors; gas detection tubes calibrated for H2S; District-approved source test methods, including EPA Method 11 or EPA Method 15, ASTM Method D1072, D4084, and D5504; or an alternative method approved by the District. Prior to utilization of in-line monitors to demonstrate compliance with the digester gas sulfur content limit of this permit, the permittee shall submit details of the proposed monitoring system, including the make, model, and detection limits, to the District and obtain District approval for the proposed monitor(s). [District Rule 2201]

44. The exhaust stack shall be equipped with permanent provisions to allow collection of stack gas samples consistent with EPA test methods and shall be equipped with safe permanent provisions to sample stack gases with a portable NOx, CO, and O2 analyzer during District inspections. The sampling ports shall be located in accordance with the CARB regulation titled California Air Resources Board Air Monitoring Quality Assurance Volume VI, Standard Operating Procedures for Stationary Emission Monitoring and Testing. [District Rule 1081]

45. The permittee shall monitor and record the stack concentration of NOx, CO, and O2 at least once every month (in which a source test is not performed) using a portable emission monitor that meets District specifications. [In-stack emission monitors may be allowed if they satisfy the standards required for portable analyzers as specified in District policies and are approved in writing by the APCO.] Monitoring shall not be required if the engine is not in operation, i.e. the engine need not be started solely to perform monitoring. Monitoring shall be performed within 5 days of restarting the engine unless monitoring has been performed within the last month. Records must be maintained of the dates of non-operation to validate extended monitoring frequencies. [District Rules 2201 and 4702]

46. If either the NOx or CO concentrations corrected to 15% O2, as measured by the portable analyzer, exceed the allowable emission concentration, the permittee shall return the emissions to within the acceptable range as soon as possible, but no longer than 8 hours after detection. If the portable analyzer readings continue to exceed the allowable emissions concentration after 8 hours, the permittee shall notify the District within the following 1 hour, and conduct a certified source test within 60 days of the first exceedance. In lieu of conducting a source test, the permittee may stipulate a violation has occurred, subject to enforcement action. The permittee must then correct the violation, show compliance has been re-established, and resume monitoring procedures. If the deviations are the result of a qualifying breakdown condition pursuant to Rule 1100, the permittee may fully comply with Rule 1100 in lieu of performing the notification and testing required by this condition. During the BACT determination period for NOx, NOx emissions neither exceeding 0.60 g-NOx/bhp-hr nor 65 ppmv @ 15% O2 are not subject to the requirements contained in this condition to source test or stipulate that an emissions violation has occurred. [District Rules 2201 and 4702]

47. {3787} All alternate monitoring parameter emission readings shall be taken with the unit operating either at conditions representative of normal operations or conditions specified in the permit-to-operate. The analyzer shall be calibrated, maintained, and operated in accordance with the manufacturer's specifications and recommendations or a protocol approved by the APCO. Emission readings taken shall be averaged over a 15 consecutive-minute period by either taking a cumulative 15 consecutive-minute sample reading or by taking at least five (5) readings, evenly spaced out over the 15 consecutive-minute period. [District Rule 4702]

48. The permittee shall maintain records of: (1) the date and time of NOx, CO, and O2 measurements, (2) the O2 concentration in percent and the measured NOx and CO concentrations corrected to 15% O2, (3) make and model of exhaust gas analyzer, (4) exhaust gas analyzer calibration records, and (5) a description of any corrective action taken to maintain the emissions within the acceptable range. [District Rules 2201 and 4702]

CONDITIONS CONTINUE ON NEXT PAGE

49. The permittee shall maintain an engine operating log to demonstrate compliance. The engine operating log shall include, on a monthly basis, the following information: the total hours of operation, type and quantity of fuel used, results of fuel composition monitoring and analysis, maintenance and modifications performed, monitoring data, compliance source test results, and any other information necessary to demonstrate compliance. Quantity of fuel used shall be recorded in standard cubic feet or standard cubic meters using a non-resettable, totalizing mass or volumetric fuel flow meter or other APCO approved-device. [District Rule 4702 and 40 CFR 60, Subpart JJJJ]

50. {3212} The permittee shall update the I&M plan for this engine prior to any planned change in operation. The permittee must notify the District no later than seven days after changing the I&M plan and must submit an updated I&M plan to the APCO for approval no later than 14 days after the change. The date and time of the change to the I&M plan shall be recorded in the engine's operating log. For modifications, the revised I&M plan shall be submitted to and approved by the APCO prior to issuance of the Permit to Operate. The permittee may request a change to the I&M plan at any time. [District Rule 4702]

51. Records of any analyzer(s) installed or utilized to monitor methane, hydrogen, oxygen, or hydrogen sulfide of the fuel gas shall be maintained and shall be made available for District inspection upon request. [District Rule 2201]

52. During the BACT determination period, when requested by the District, the permittee shall perform and submit a fuel analysis of the fuel gas combusted in the engine using ASTM methods 1945 and D3588 or other method(s) approved by the District. [District Rules 1081 and 2201]

53. All records shall be maintained and retained for a minimum of five (5) years, and shall be made available for District inspection upon request. All records may be maintained and submitted in an electronic format approved by the District. [District Rules 2201 and 4702]

54. The permittee shall obtain written District approval for the use of any equivalent equipment not specifically approved by this Authority to Construct. Approval of the equivalent equipment shall be made only after the District's determination that the submitted design and performance of the proposed alternate equipment is equivalent to the specifically authorized equipment. [District Rule 2201]

55. The permittee's request for approval of equivalent equipment shall include, as applicable, the make, model, manufacturer's maximum rating, manufacturer's guaranteed emission rates, equipment diagram(s)/drawing(s), and operational characteristics/parameters. [District Rule 2010]

56. Alternate equipment shall be of the same class and category of source as the equipment authorized by the Authority to Construct. [District Rule 2201]

57. No emission factor and no emissions shall be greater for the alternate equipment than for the proposed equipment. No changes in the hours of operation, operating rate, throughput, or firing rate may be authorized for any alternate equipment. [District Rule 2201]

58. The equipment and operations of facility S-5834 and S-7831 are considered the same stationary source for the purposes of determining applicability and requirements of Rule 2201, New and Modified Stationary Source Review. [District Rule 2201]

59. Notification of the date construction of this engine commenced shall be submitted to the District and EPA and shall be postmarked no later than 30 days after such date as construction commenced. The notification shall contain the following information: 1) Name and address of the owner or operator; 2) The address of the affected source; 3) Engine information including make, model, engine family, serial number, model year, maximum engine power, and engine displacement; 4) Emission control equipment; and 5) Fuel used. Notification of construction and copies of source test results shall be submitted to EPA at the following address: Director, Air Division, U.S. Environmental Protection Agency, 75 Hawthorne Street, San Francisco, CA 94105. [40 CFR 60, Subpart JJJJ]

San Joaquin Valley
Air Pollution Control District

AUTHORITY TO CONSTRUCT

PERMIT NO: S-7831-3-0

ISSUANCE DATE: DRAFT

LEGAL OWNER OR OPERATOR: AGPOWER VISALIA, LLC
MAILING ADDRESS: 6920 SALASHIAN PARKWAY A-102
FERNDALE, WA 98248

LOCATION: 5061 AVE 280 (W CALDWELL AVE)
VISALIA, CA 93277

EQUIPMENT DESCRIPTION:
675 BHP GUASCOR MODEL SFGLD 360 DIGESTER GAS-FIRED LEAN BURN IC ENGINE WITH A FLORIDA SYNGAS PLASMA ARC REFORMER FOR HYDROGEN/SYNGAS INJECTION SERVED BY AN AIR INJECTION H2S REMOVAL SYSTEM AND AN IRON SPONGE H2S SCRUBBER (OR EQUIVALENT H2S REMOVAL SYSTEM) POWERING AN ELECTRICAL GENERATOR

CONDITIONS

1. {98} No air contaminant shall be released into the atmosphere which causes a public nuisance. [District Rule 4102]
2. {14} Particulate matter emissions shall not exceed 0.1 grains/dscf in concentration. [District Rule 4201]
3. {15} No air contaminant shall be discharged into the atmosphere for a period or periods aggregating more than three minutes in any one hour which is as dark as, or darker than, Ringelmann 1 or 20% opacity. [District Rule 4101]
4. {1898} The exhaust stack shall vent vertically upward. The vertical exhaust flow shall not be impeded by a rain cap (flapper ok), roof overhang, or any other obstruction. [District Rule 4102]
5. {3202} This engine shall be operated and maintained in proper operating condition per the manufacturer's requirements as specified on the Inspection and Monitoring (I&M) plan submitted to the District. [District Rule 4702]
6. {3203} This engine shall be operated within the ranges that the source testing has shown result in pollution concentrations within the emissions limits as specified on this permit. [District Rule 4702]
7. This engine/generation system shall be fired only on digester gas. [District Rules 2201]

CONDITIONS CONTINUE ON NEXT PAGE

YOU MUST NOTIFY THE DISTRICT COMPLIANCE DIVISION AT (661) 392-5500 WHEN CONSTRUCTION IS COMPLETED AND PRIOR TO OPERATING THE EQUIPMENT OR MODIFICATIONS AUTHORIZED BY THIS AUTHORITY TO CONSTRUCT. This is NOT a PERMIT TO OPERATE. Approval or denial of a PERMIT TO OPERATE will be made after an inspection to verify that the equipment has been constructed in accordance with the approved plans, specifications and conditions of this Authority to Construct, and to determine if the equipment can be operated in compliance with all Rules and Regulations of the San Joaquin Valley Unified Air Pollution Control District. Unless construction has commenced pursuant to Rule 2050, this Authority to Construct shall expire and application shall be cancelled two years from the date of issuance. The applicant is responsible for complying with all laws, ordinances and regulations of all other governmental agencies which may pertain to the above equipment.

Seyed Sadredin, Executive Director / APCO

DRAFT

DAVID WARNER, Director of Permit Services
S-7831-3-0 : Nov 8 2010 2:16PM -- NORMANR : Joint Inspection NOT Required

8. The applicant has requested to install an experimental sulfur removal system that will require a commissioning period prior to achieving steady state operation and optimal removal of sulfur from the digester gas. The owner/operator shall minimize the sulfur content of the gas to the maximum extent possible during commissioning of the sulfur removal system. Conditions #9 through #15 shall apply only during the commissioning period as defined below. Unless otherwise indicated, all other conditions limiting the sulfur content of the digester gas shall apply after the commissioning period has ended. [District Rule 2201]

9. Commissioning period for the sulfur removal system shall commence when the digester begins to produce a continuous flow of gas at a rate of least 1.0 cfm. The commissioning period shall terminate when the sulfur removal system has completed initial performance testing and reached steady operation with a digester gas sulfur concentration not exceeding 200 ppmv as H2S. The duration of the commissioning period shall not exceed 60 days. At the earliest feasible opportunity, the air injection rate of sulfur removal system shall be adjusted to minimize the sulfur content of the digester gas. [District Rule 2201]

10. During commissioning of the sulfur removal system, the sulfur content of the digester gas combusted in this unit shall not exceed 4,000 ppmv during the first 30 days of commissioning, shall not exceed 2,500 ppmv during the next 15 days of commissioning, and shall not exceed 1,000 ppmv during any remaining days of the commissioning period. [District Rules 2201 and 4801]

11. No more than one of permit units S-7831-1, -2, and -3 (digester gas-fired flare and IC engines) shall operate at any one time until the measured sulfur content of the digester gas is 1,000 ppmv or less for at least three consecutive days. [District Rule 2201]

12. The sulfur content of the digester gas stream(s) that enter the hydrogen/syngas reformer(s) shall not exceed 200 ppmv. The digester gas stream(s) that enter the hydrogen/syngas reformer(s) shall continue to be scrubbed separately until the sulfur removal system reduces the measured sulfur content of the digester gas to 200 ppmv or less for at least three consecutive days. [District Rule 2201]

13. During commissioning of the sulfur removal system, the permittee shall measure and record the sulfur content of the primary digester gas stream and the separate scrubbed digester gas stream(s) for use in the hydrogen/syngas reformer(s) at least once per day using the methods approved in this permit. [District Rule 2201]

14. The permittee shall record the total number of days of commissioning of the sulfur removal system, the operating schedule and total amount of time this unit operates during commissioning of the sulfur removal system, and the total amount of gas combusted in permit units S-7831-1, -2, and -3 (digester gas-fired flare and IC engines) each day of the commissioning period. [District Rule 2201]

15. Coincident with the end of the commissioning period for the sulfur removal system, the sulfur content of the digester gas shall comply with the limits specified in conditions #16 and #17 below. [District Rule 2201]

16. The sulfur content of the digester gas used as fuel in this engine shall not exceed 50 ppmv as H2S except as provided below. [District Rules 2201 and 4801]

17. The applicant has requested to install an experimental sulfur removal system. A six-month test period will be allowed for the experimental sulfur removal system after startup. The six-month test period shall begin with commencement of the commissioning period for the sulfur removal system and any time required for commissioning of the sulfur removal system shall be counted in the six-month test period. During the test period a digester gas sulfur content greater than 50 ppmv but not exceeding 200 ppmv will not constitute a violation of the permit provided that the sulfur removal system is operated to minimize the sulfur content to the maximum extent feasible. [District Rule 2201]

18. If the sulfur content of the digester gas continues to exceed 50 ppmv as H2S by the end of the six-month test period for the experimental sulfur removal system, the permittee shall submit details to the District of an additional polishing scrubber or an alternative sulfur removal system to meet the required 50 ppmv limit within 30 days of the end of the test period. If the District determines that an ATC application is required for the equipment, the applicant shall submit an ATC application within 15 days of the District's determination and the applicant shall request expedited processing of the required ATC permit and shall pay any required fees for expedited processing. The equipment to meet the sulfur content limit shall be installed within 90 days of approval by the District or issuance of the ATC; if the permit units controlled by the sulfur removal system/scrubber are not operating the District may approve an extension of this period. [District Rule 2201]

19. This engine shall be equipped with an operational non-resettable elapsed time meter. [District Rules 2201 and 4702]

CONDITIONS CONTINUE ON NEXT PAGE

20. {1897} This engine shall be equipped with either a positive crankcase ventilation (PCV) system that recirculates crankcase emissions into the air intake system for combustion, or a crankcase emissions control device of at least 90% control efficiency. [District Rule 2201]

21. This engine shall be operated in a lean-burn configuration maintaining an exhaust stream oxygen (O2) concentration of 8% per volume or greater prior to any exhaust stream control device. The District may approve a lower exhaust oxygen concentration if compliance with the BACT requirement for NOx is demonstrated at the lower level. [District Rule 2201]

22. Emissions from this IC engine shall not exceed any of the following limits (except as provided in conditions 23-26 below): 0.15 g-NOx/bhp-hr (NOx referenced as NO2), 2.20 g-CO/bhp-hr, 0.20 g-VOC/bhp-hr (VOC referenced as methane), 0.07 g-PM10/bhp-hr. [District Rules 2201 and 4702]

23. NOx emissions (as NO2) from the engine in excess of 0.15 g/bhp-hr but not exceeding 0.60 g/bhp-hr shall not constitute a violation of this permit provided that NOx emissions are limited to the lowest achievable emission rate to satisfy BACT. BACT for NOx from this engine shall consist of all other emission limitations and operational and design conditions contained in this permit. The final BACT level for NOx shall be determined to the satisfaction of the Air Pollution Control Officer in accordance with District Rule 2201 and the District's BACT policy, after at least 12 months of operating history and an official compliance source test. [District Rule 2201]

24. If within the first 12 months of operation the applicant decides that continued operation of the hydrogen injection system has proven infeasible, the applicant may provide a written report explaining why continued operation of the hydrogen injection system has proven infeasible and submit a written request to discontinue the BACT determination. If the District agrees that continued operation of the hydrogen injection system has proven infeasible, the BACT determination period may be terminated prior to completing the first 12 months of operation. [District Rule 2201]

25. If NOx emissions from the engine continue to exceed 0.15 g/bhp-hr after the BACT determination period, the permittee shall have 60 days to submit a report containing all monitoring and source test information to the District. The report shall also include an explanation of the steps taken to operate and maintain the engine in such a manner as to minimize NOx emissions and a detailed analysis of all factors that prohibit compliance with the NOx emissions limit. In the report, the permittee may also propose a final BACT emission limit for NOx for inclusion in this permit. The monitoring data and source test information gathered in accordance with this permit may be shared with other technical experts so their input can be considered when determining the final BACT limit for NOx that can be consistently achieved. [District Rule 2201]

26. The District shall establish the final BACT limit for NOx, including any applicable averaging periods, and revise the applicable limit contained in the permit within 60 days of the successful completion of the BACT determination period or receipt of the report from the permittee. Within 30 days of receipt of the District's determination, the permittee shall submit an Authority to Construct application to incorporate the revised emissions limit(s). In no case shall the final BACT NOx emission limitation be higher than 0.60 g-NOx/bhp-hr. The engine shall be allowed to continue to operate after the BACT evaluation period has ended and before the new Authority to Construct permit has been issued provided that NOx (as NO2) emissions from the engine do not exceed either of the following limits: 1) 0.60 g-NOx/bhp-hr and 2) 65 ppmv NOx @ 15% O2. [District Rules 2201 and 4702]

27. If the engine demonstrates reasonably reliable compliance with the 0.15 g/bhp-hr NOx emissions limit during the BACT evaluation period, this limit shall be deemed BACT for the installation. [District Rule 2201]

28. The hydrogen/syngas reformer shall be designed to deliver sufficient hydrogen (H2) to comprise at least 11% of the total engine fuel by volume and shall be operated to deliver sufficient hydrogen to allow stable operation of the engine in a lean burn configuration with at least 8% O2 in the exhaust. [District Rule 2201]

29. The hydrogen/syngas reformer shall be designed to be tolerant of the concentration of the concentration of sulfur and other contaminants in the digester gas that is reformed and shall be maintained and replaced in accordance with the recommendations of the manufacturer or emission control supplier. Records of maintenance and replacement of the reformer shall be maintained. [District Rule 2201]

CONDITIONS CONTINUE ON NEXT PAGE

30. The composition of the fuel gas (i.e. CH4, CO2, H2, CO) that enters the engine after a portion has been reformed into hydrogen shall be sampled and analyzed during times in which NOx emissions are being source tested. The composition of the fuel gas that enters the engine after a portion has been reformed into hydrogen shall be either monitored or sampled and analyzed during times in which NOx emissions are monitored with a portable analyze. Records of the results of the analysis and monitoring of the fuel gas shall be maintained. [District Rule 2201 and 4702]

31. The HHV and LHV of the fuel gas samples taken in conjunction with source tests shall be determined using ASTM D3588, ASTM 1826, ASTM 1945, or an alternative method approved by the District. [District Rule 2201]

32. Air-to-fuel ratio controller(s) shall be maintained and operated appropriately in order to ensure proper operation of the engine and control device to minimize emissions at all times. [District Rule 2201 and 40 CFR 60, Subpart JJJJ]

33. During the 12-month BACT determination period, if requested by the District, source testing to measure NOx and CO emissions from this unit for monitoring purposes shall be conducted using methods and procedures approved by the District. [District Rules 1081, 2201, and 4702]

34. Official source testing to demonstrate compliance with NOx, CO, and VOC emissions limits from this unit shall be conducted within 365 days of initial start-up using the methods specified in this permit. [District Rules 1081, 2201, and 4702 and 40 CFR 60, Subpart JJJJ]

35. Source testing to measure NOx, CO, and VOC emissions from this unit shall be conducted at least once every 8,760 hours of operation or 24 months, whichever comes first. [District Rules 1081, 2201, and 4702 and 40 CFR 60, Subpart JJJJ]

36. {3791} Emissions source testing shall be conducted with the engine operating either at conditions representative of normal operations or conditions specified in the Permit to Operate. [District Rule 4702]

37. For official emissions source testing, the arithmetic average of three 60-consecutive-minute test runs shall apply. Each test run shall be conducted within 10 percent of 100 percent peak (or the highest achievable) load. If two of three runs are above an applicable limit, the test cannot be used to demonstrate compliance with an applicable limit. VOC emissions shall be reported as both methane and as propane. VOC, NOx, and CO concentrations shall be reported in ppmv, corrected to 15% oxygen. [District Rule 4702 and 40 CFR 60, Subpart JJJJ]

38. The following methods shall be used for official source testing: NOx (ppmv) - EPA Method 7E, CO (ppmv) - EPA Method 10, VOC (ppmv) - EPA Method 25A or 25B, stack gas oxygen - EPA Method 3 or 3A, stack gas velocity - EPA Method 2 or EPA Method 19, stack gas moisture content - EPA Method 4. Alternative test methods as approved by EPA and the District may also be used to address the source testing requirements of this permit. [District Rules 1081 and 4702 and 40 CFR 60, Subpart JJJJ]

39. {109} Source testing shall be conducted using the methods and procedures approved by the District. The District must be notified at least 30 days prior to any compliance source test, and a source test plan must be submitted for approval at least 15 days prior to testing. [District Rule 1081]

40. The results of each source test shall be submitted to the District and EPA within 60 days after completion of the source test. [District Rule 1081 and 40 CFR 60, Subpart JJJJ]

41. To determine if the measured emissions concentration complies with the g/bhp emissions limits specified in the this permit, the fuel flow rate to the engine and engine load or generator power output shall be monitored and recorded during source testing. If the generator power output is used, the manufacturer's guaranteed efficiency of the generator or 95%, whichever is higher, shall be used to calculate the load of the engine. The emission rate (mass/time) shall be determined by multiplying the measured emissions concentration and stack flow rate determined during source testing. The g/bhp-hr emission factors for NOx, CO, and VOC as propane shall be determined in accordance with the equations given in 40 CFR § 60.4244. The g/bhp-hr emission factors for VOC as methane shall be determined using the following equation: ER = (Cd x 6.667E-4 x Q x T)/(HP-hr); Where: ER = Emission rate of VOC as methane in g/HP-hr, Cd= VOC concentration as methane in ppmv, and other terms are the same as the equations given in 40 CFR § 60.4244. The District may approve other procedures to determine the engine load and pollutant g/bhp-hr emission factors. [District Rule 2201 and 40 CFR 60, Subpart JJJJ]

CONDITIONS CONTINUE ON NEXT PAGE

42. The sulfur content of the digester gas used to fuel the engine shall be monitored and recorded monthly. After eight (8) consecutive monthly tests show compliance, the fuel sulfur content monitoring frequency may be reduced to once every calendar quarter. If quarterly monitoring shows a violation of the fuel sulfur content limit of this permit, then monthly monitoring shall resume and continue until eight consecutive months of monitoring show compliance with the fuel sulfur content limit. Once compliance with the fuel sulfur content limit is shown for eight consecutive months, then the monitoring frequency may return to quarterly. Monitoring of the sulfur content of the digester gas fuel shall not be required if the engine does not operate during that period. Records of the results of monitoring of the digester gas fuel sulfur content shall be maintained. [District Rule 2201]

43. Monitoring of the digester gas sulfur content shall be performed using a Testo 350 XL portable emission monitor; District-approved in-line H2S monitors; gas detection tubes calibrated for H2S; District-approved source test methods, including EPA Method 11 or EPA Method 15, ASTM Method D1072, D4084, and D5504; or an alternative method approved by the District. Prior to utilization of in-line monitors to demonstrate compliance with the digester gas sulfur content limit of this permit, the permittee shall submit details of the proposed monitoring system, including the make, model, and detection limits, to the District and obtain District approval for the proposed monitor(s). [District Rule 2201]

44. The exhaust stack shall be equipped with permanent provisions to allow collection of stack gas samples consistent with EPA test methods and shall be equipped with safe permanent provisions to sample stack gases with a portable NOx, CO, and O2 analyzer during District inspections. The sampling ports shall be located in accordance with the CARB regulation titled California Air Resources Board Air Monitoring Quality Assurance Volume VI, Standard Operating Procedures for Stationary Emission Monitoring and Testing. [District Rule 1081]

45. The permittee shall monitor and record the stack concentration of NOx, CO, and O2 at least once every month (in which a source test is not performed) using a portable emission monitor that meets District specifications. [In-stack emission monitors may be allowed if they satisfy the standards required for portable analyzers as specified in District policies and are approved in writing by the APCO.] Monitoring shall not be required if the engine is not in operation, i.e. the engine need not be started solely to perform monitoring. Monitoring shall be performed within 5 days of restarting the engine unless monitoring has been performed within the last month. Records must be maintained of the dates of non-operation to validate extended monitoring frequencies. [District Rules 2201 and 4702]

46. If either the NOx or CO concentrations corrected to 15% O2, as measured by the portable analyzer, exceed the allowable emission concentration, the permittee shall return the emissions to within the acceptable range as soon as possible, but no longer than 8 hours after detection. If the portable analyzer readings continue to exceed the allowable emissions concentration after 8 hours, the permittee shall notify the District within the following 1 hour, and conduct a certified source test within 60 days of the first exceedance. In lieu of conducting a source test, the permittee may stipulate a violation has occurred, subject to enforcement action. The permittee must then correct the violation, show compliance has been re-established, and resume monitoring procedures. If the deviations are the result of a qualifying breakdown condition pursuant to Rule 1100, the permittee may fully comply with Rule 1100 in lieu of performing the notification and testing required by this condition. During the BACT determination period for NOx, NOx emissions neither exceeding 0.60 g-NOx/bhp-hr nor 65 ppmv @ 15% O2 are not subject to the requirements contained in this condition to source test or stipulate that an emissions violation has occurred. [District Rules 2201 and 4702]

47. {3787} All alternate monitoring parameter emission readings shall be taken with the unit operating either at conditions representative of normal operations or conditions specified in the permit-to-operate. The analyzer shall be calibrated, maintained, and operated in accordance with the manufacturer's specifications and recommendations or a protocol approved by the APCO. Emission readings taken shall be averaged over a 15 consecutive-minute period by either taking a cumulative 15 consecutive-minute sample reading or by taking at least five (5) readings, evenly spaced out over the 15 consecutive-minute period. [District Rule 4702]

48. The permittee shall maintain records of: (1) the date and time of NOx, CO, and O2 measurements, (2) the O2 concentration in percent and the measured NOx and CO concentrations corrected to 15% O2, (3) make and model of exhaust gas analyzer, (4) exhaust gas analyzer calibration records, and (5) a description of any corrective action taken to maintain the emissions within the acceptable range. [District Rules 2201 and 4702]

CONDITIONS CONTINUE ON NEXT PAGE

49. The permittee shall maintain an engine operating log to demonstrate compliance. The engine operating log shall include, on a monthly basis, the following information: the total hours of operation, type and quantity of fuel used, results of fuel composition monitoring and analysis, maintenance and modifications performed, monitoring data, compliance source test results, and any other information necessary to demonstrate compliance. Quantity of fuel used shall be recorded in standard cubic feet or standard cubic meters using a non-resettable, totalizing mass or volumetric fuel flow meter or other APCO approved-device. [District Rule 4702 and 40 CFR 60, Subpart JJJJ]

50. {3212} The permittee shall update the I&M plan for this engine prior to any planned change in operation. The permittee must notify the District no later than seven days after changing the I&M plan and must submit an updated I&M plan to the APCO for approval no later than 14 days after the change. The date and time of the change to the I&M plan shall be recorded in the engine's operating log. For modifications, the revised I&M plan shall be submitted to and approved by the APCO prior to issuance of the Permit to Operate. The permittee may request a change to the I&M plan at any time. [District Rule 4702]

51. Records of any analyzer(s) installed or utilized to monitor methane, hydrogen, oxygen, or hydrogen sulfide of the fuel gas shall be maintained and shall be made available for District inspection upon request. [District Rule 2201]

52. During the BACT determination period, when requested by the District, the permittee shall perform and submit a fuel analysis of the fuel gas combusted in the engine using ASTM methods 1945 and D3588 or other method(s) approved by the District. [District Rules 1081 and 2201]

53. All records shall be maintained and retained for a minimum of five (5) years, and shall be made available for District inspection upon request. All records may be maintained and submitted in an electronic format approved by the District. [District Rules 2201 and 4702]

54. The permittee shall obtain written District approval for the use of any equivalent equipment not specifically approved by this Authority to Construct. Approval of the equivalent equipment shall be made only after the District's determination that the submitted design and performance of the proposed alternate equipment is equivalent to the specifically authorized equipment. [District Rule 2201]

55. The permittee's request for approval of equivalent equipment shall include, as applicable, the make, model, manufacturer's maximum rating, manufacturer's guaranteed emission rates, equipment diagram(s)/drawing(s), and operational characteristics/parameters. [District Rule 2010]

56. Alternate equipment shall be of the same class and category of source as the equipment authorized by the Authority to Construct. [District Rule 2201]

57. No emission factor and no emissions shall be greater for the alternate equipment than for the proposed equipment. No changes in the hours of operation, operating rate, throughput, or firing rate may be authorized for any alternate equipment. [District Rule 2201]

58. The equipment and operations of facility S-5834 and S-7831 are considered the same stationary source for the purposes of determining applicability and requirements of Rule 2201, New and Modified Stationary Source Review. [District Rule 2201]

59. Notification of the date construction of this engine commenced shall be submitted to the District and EPA and shall be postmarked no later than 30 days after such date as construction commenced. The notification shall contain the following information: 1) Name and address of the owner or operator; 2) The address of the affected source; 3) Engine information including make, model, engine family, serial number, model year, maximum engine power, and engine displacement; 4) Emission control equipment; and 5) Fuel used. Notification of construction and copies of source test results shall be submitted to EPA at the following address: Director, Air Division, U.S. Environmental Protection Agency, 75 Hawthorne Street, San Francisco, CA 94105. [40 CFR 60, Subpart JJJJ]