San Joaquin Valley
AIR POLLUTION CONTROL DISTRICT

HEALTHY AIR LIVING™

JUN 15 2011

Dave Henry
Sutter Home Winery
P.O. Box 248
St. Helena, CA 94574-0248

Re: Notice of Preliminary Decision - Authority to Construct
Project Number: N-1110296

Dear Mr. Henry:

Enclosed for your review and comment is the District's analysis of Sutter Home Winery's application for an Authority to Construct for installation of 76 new wine fermentation/storage tanks, at 18667 Jacob Brack Road in Lodi.

The notice of preliminary decision for this project will be published approximately three days from the date of this letter. Please submit your written comments on this project within the 30-day public comment period which begins on the date of publication of the public notice.

Thank you for your cooperation in this matter. If you have any questions regarding this matter, please contact Mr. Dennis Roberts of Permit Services at (559) 230-5919.

Sincerely,

David Warner
Director of Permit Services

DW:dr

Enclosures

Seyed Sadredin
Executive Director/Air Pollution Control Officer

Northern Region
4800 Enterprise Way
Modesto, CA 95356-8718
Tel: (209) 557-6400 FAX: (209) 557-6475

Central Region (Main Office)
1990 E. Gettysburg Avenue
Fresno, CA 93726-0244
Tel: (559) 230-6000 FAX: (559) 230-6061

Southern Region
34946 Flyover Court
Bakersfield, CA 93308-9725
Tel: 661-392-5500 FAX: 661-392-5585

www.valleyair.org www.healthyairliving.com

Printed on recycled paper.

San Joaquin Valley
AIR POLLUTION CONTROL DISTRICT

HEALTHY AIR LIVING™

JUN 15 2011

Mike Tollstrup, Chief
Project Assessment Branch
Stationary Source Division
California Air Resources Board
PO Box 2815
Sacramento, CA 95812-2815

Re: Notice of Preliminary Decision - Authority to Construct
Project Number: N-1110296

Dear Mr. Tollstrup:

Enclosed for your review and comment is the District's analysis of Sutter Home Winery's application for an Authority to Construct for installation of 76 new wine fermentation/storage tanks, at 18667 Jacob Brack Road in Lodi.

The notice of preliminary decision for this project will be published approximately three days from the date of this letter. Please submit your written comments on this project within the 30-day public comment period which begins on the date of publication of the public notice.

Thank you for your cooperation in this matter. If you have any questions regarding this matter, please contact Mr. Dennis Roberts of Permit Services at (559) 230-5919.

Sincerely,

David Warner
Director of Permit Services

DW:dr

Enclosure

Seyed Sadredin
Executive Director/Air Pollution Control Officer

Northern Region
4800 Enterprise Way
Modesto, CA 95356-8718
Tel: (209) 557-6400 FAX: (209) 557-6475

Central Region (Main Office)
1990 E. Gettysburg Avenue
Fresno, CA 93726-0244
Tel: (559) 230-6000 FAX: (559) 230-6061

Southern Region
34946 Flyover Court
Bakersfield, CA 93308-9725
Tel: 661-392-5500 FAX: 661-392-5585

www.valleyair.org www.healthyairliving.com

Printed on recycled paper.

San Joaquin Valley
AIR POLLUTION CONTROL DISTRICT

HEALTHY AIR LIVING™

JUN 15 2011

Gerardo C. Rios (AIR 3)
Chief, Permits Office
Air Division
U.S. E.P.A. - Region IX
75 Hawthorne Street
San Francisco, CA 94105

Re: Notice of Preliminary Decision - Authority to Construct
Project Number: N-1110296

Dear Mr. Rios:

Enclosed for your review and comment is the District's analysis of Sutter Home Winery's application for an Authority to Construct for installation of 76 new wine fermentation/storage tanks, at 18667 Jacob Brack Road in Lodi.

The notice of preliminary decision for this project will be published approximately three days from the date of this letter. Please submit your written comments on this project within the 30-day public comment period which begins on the date of publication of the public notice.

Thank you for your cooperation in this matter. If you have any questions regarding this matter, please contact Mr. Dennis Roberts of Permit Services at (559) 230-5919.

Sincerely,

David Warner
Director of Permit Services

DW:dr

Enclosure

Seyed Sadredin
Executive Director/Air Pollution Control Officer

Northern Region
4800 Enterprise Way
Modesto, CA 95356-8718
Tel: (209) 557-6400 FAX: (209) 557-6475

Central Region (Main Office)
1990 E. Gettysburg Avenue
Fresno, CA 93726-0244
Tel: (559) 230-6000 FAX: (559) 230-6061

Southern Region
34946 Flyover Court
Bakersfield, CA 93308-9725
Tel: 661-392-5500 FAX: 661-392-5585

www.valleyair.org www.healthyairliving.com

Printed on recycled paper.

Stockton Record
Stockton Record

**NOTICE OF PRELIMINARY DECISION
FOR THE PROPOSED ISSUANCE OF
AN AUTHORITY TO CONSTRUCT**

NOTICE IS HEREBY GIVEN that the San Joaquin Valley Unified Air Pollution Control District solicits public comment on the proposed issuance of Authority to Construct to Sutter Home Winery for installation of 76 new wine fermentation/storage tanks, at 18667 Jacob Brack Road in Lodi.

The analysis of the regulatory basis for this proposed action, Project #N-1110296, is available for public inspection at http://www.valleyair.org/notices/public_notices_idx.htm and the District office at the address below. Written comments on this project must be submitted within 30 days of the publication date of this notice to **DAVID WARNER, DIRECTOR OF PERMIT SERVICES, SAN JOAQUIN VALLEY UNIFIED AIR POLLUTION CONTROL DISTRICT, REGION'S ADDRESS.**

San Joaquin Valley Air Pollution Control District
Authority to Construct Application Review
Winery Tanks

Facility Name:	Sutter Home Winery	Date:	March 22, 2011
Mailing Address:	P.O. Box 248	Engineer:	Dennis Roberts
	St. Helena, CA 94574-0248	Lead Engineer:	Martin Keast
Contact Person:	Dave Henry		
Telephone:	(707) 302-3057		
Fax:	(707) 963-8347		
E-Mail:	dhenry@tfewines.com		
Application #(s):	See Appendix A		
Project #:	N-1110296		
Deemed Complete:	March 3, 2011		

I. Proposal

The primary business of Sutter Home Winery is the production of table wines and related beverages. Sutter Home has submitted Authority to Construct (ATC) applications for the following proposed project:

- Install 76 new wine fermentation and storage tanks.
- Emissions from the new wine storage and fermentation tanks will be limited as a part of the existing Specific Limiting Condition (SLC) covering all wine tanks at the facility.

This facility is currently not a Title V facility.

II. Applicable Rules

Rule 2201	New and Modified Stationary Source Review Rule (12/18/08)
Rule 2520	Federally Mandated Operating Permits (6/21/01)
Rule 4001	New Source Performance Standards (4/14/99)
Rule 4002	National Emissions Standards for Hazardous Air Pollutants (5/20/04)
Rule 4102	Nuisance (12/17/92)
Rule 4694	Wine Fermentation and Storage Tanks (12/15/05)
CH&SC 41700	Health Risk Assessment
CH&SC 42301.6	School Notice

Public Resources Code 21000-21177: California Environmental Quality Act (CEQA)
California Code of Regulations, Title 14, Division 6, Chapter 3, Sections 15000-15387: CEQA Guidelines

III. Project Location

The facility is located at 18667 Jacob Brack Road in Lodi. The equipment is not located within 1,000 feet of the outer boundary of a K-12 school. Therefore, the public notification requirement of California Health and Safety Code 42301.6 is not applicable to this project.

IV. Process Description

Sutter Home produces both red and white table wines, as well as other specialty wine products, from the fermentation of grapes. During the "crush season", typically from late August to late November, both red and white grapes are received by truck and delivered to a crusher-stemmer which serves to crush the grapes and remove the stems. In the case of red wines, the resultant juice (termed "must" and containing the grape skins, pulp and seeds) is pumped to red wine fermentation tanks for fermentation, a batch process. The red wine fermentation tanks are specifically designed to ferment the must in contact with the skins and to allow the separation of the skins and seeds from the wine after fermentation. In the case of white wines, the must is first sent to screens and presses for separation of grape skins and seeds prior to fermentation. After separation of the skins and seeds, the white must is transferred to a fermentation tank. White wine fermentation can be carried out in a tank without design provisions for solids separation since the skins and seeds have already been separated.

After transfer of the must (red or white) to the fermentation tank, the must is inoculated with yeast which initiates the fermentation reactions. During fermentation, the yeast metabolizes the sugar in the grape juice, converting it to ethanol and carbon dioxide and releasing heat. Although fermentation temperatures vary widely depending upon the specific quality and style of the wine, temperature is typically controlled to maintain a temperature of 45-70° F for white wine fermentation and 70-85° F for red wine fermentation. The sugar content of the fermentation mass is measured in °Brix (weight %) and is typically 22-26° for unfermented grape juice, dropping to 4° or less for the end of fermentation. Finished ethanol concentration is approximately 10 to 14 percent by volume. Batch fermentation requires 3-5 days per batch for red wine and 1-2 weeks per batch for white wine. VOCs are emitted during the fermentation process along with the CO_2. The VOCs consist primarily of ethanol along with minor fermentation byproducts.

Following the completion of fermentation, white wine is transferred directly to storage tanks. Red wine is first directed to the presses for separation of solids and then routed to the storage tanks. All tanks in the winery typically operate as two separate emissions units; 1) a fermentation operation during which the tank is vented directly to the atmosphere to release the evolved CO_2 byproduct from the fermentation reaction. and 2) a storage operation where the tank is closed to minimize contact with air and the contents is often refrigerated. Post-fermentation operations are conducted in the tanks including cold stabilization, racking, filtration, etc which result in a number of inter-tank transfers of the wine during this period leading up to the bottling or bulk shipment of the finished product. Storage operations are conducted year-round. VOC emissions occur primarily as a result of the inter-tank wine transfers which occur during the post fermentation operations.

V. Equipment Listing

This project proposes installation of 76 new wine storage and fermentation tanks. All proposed tanks are equipped with pressure/vacuum valves and insulation. See the detailed equipment description for all tanks in Appendix A.

VI. Emission Control Technology Evaluation

VOCs (ethanol) are emitted from wine storage tanks as a result of both working losses (which occur when the liquid level in the tank changes) and breathing losses (expansion and contraction effects due to temperature variations). The proposed pressure/vacuum valve limits these emissions by requiring the maximum amount of variation in tank pressure before allowing the tank to vent to the atmosphere or allowing air admission to the tank. When wine storage tanks are insulated or located in a climate controlled building, breathing losses are considered to be negligible.

The temperature of the fermentation is controlled to maintain an average fermentation temperature not exceeding 95 °F which avoids higher temperatures that might be damaging to the yeast cells and reduces the potential for an out-of-control fermentation reaction in the tank. Temperature control serves to minimize VOC emissions relative to a tank without temperature control since the potential emissions increase with fermentation temperature.

VII. General Calculations

A. Basis and Assumptions

- Winery tanks generally consist of two emissions units; 1) a fermentation tank emissions unit and 2) a wine storage tank emissions unit.

- Post-project, combined annual storage and fermentation emissions (annual PE2) from both existing and new tanks will be set equal to the combined annual storage and fermentation emissions (PE1) from the existing tanks at the facility.

- Daily Potential to Emit for both storage and fermentation operations will be calculated on a tank-by-tank basis in accordance with the emission factors given in the District's internal policy document FYI-114, *Estimating VOC Emissions from Wine Storage Tanks (attached in Appendix D)*.

- Daily Potential to Emit for both storage and fermentation operations will be calculated on a tank-by-tank basis as outlined in District FYI-114, *Estimating VOC Emissions from Wine Storage Tanks*.
  - Daily breathing losses are assumed to be negligible from the storage operation since all existing storage tank emissions units are insulated and equipped with a pressure/vacuum relief valve.

  - Maximum daily storage tank throughput is 5 times the tank capacity for each unit per applicant.

  - Maximum ethanol content is 23.9 volume % per applicant.

- Annual Potential to Emit for VOC emissions from the fermentation and storage operation at the facility will be calculated per the District's draft policy, *Calculation of the Potential to Emit for VOC Emissions from Wine Fermentation and Storage Operations (attached in Appendix E).*

B. Emission Factors

The required emission factors for fermentation and storage operations are taken from District FYI-114, *Estimating VOC Emissions from Winery Tanks,* with storage tank emission factors interpolated from Table 1:

Red Wine Fermentation:
Daily: 3.46 lb-VOC/1000 gallons tank capacity
Annual: 6.2 lb-VOC/1000 gallons annual throughput

White Wine Fermentation
Daily: 1.62 lb-VOC/1000 gallons tank capacity
Annual: 2.5 lb-VOC/1000 gallons annual throughput

Wine Storage Working Losses @ 23.9% Ethanol (extrapolated from Table 1, District FYI-114)
Daily: 0.528 lb-VOC/1000 gallons daily throughput
Annual: 0.363 lb-VOC/1000 gallons annual throughput

C. Calculations

1. Pre-Project Potential to Emit (PE1)

Since these are new emissions units (fermentation and storage), PE1 = 0 (all pollutants) for both storage tank and fermentation operations in these tanks.

2. Post Project Potential to Emit (PE2)

Daily PE2

a. Daily PE2 for each new wine storage tank emissions unit (units N-7855-701-0 through -776-0):

See Appendix B

b. Daily PE2 for each new wine fermentation tank emissions unit (units N-7855-701-0 through -776-0):

See Appendix C

Annual PE2

The new wine storage and fermentation emissions units will all be limited under the existing Specific Limiting Condition (SLC) currently covering all wine tanks at the facility:

$PE2_{all\ tanks}$ = 292,950 lb-VOC/year

3. Pre-Project Stationary Source Potential to Emit (SSPE1)

Pursuant to Section 4.9 of District Rule 2201, the Pre-Project Stationary Source Potential to Emit (SSPE1) is the Potential to Emit (PE) from all units with valid Authorities to Construct (ATC) or Permits to Operate (PTO) at the Stationary Source and the quantity of emission reduction credits (ERC) which have been banked since September 19, 1991 for Actual Emissions Reductions that have occurred at the source, and which have not been used on-site.

SSPE1 calculations are necessary to aid the following determinations:
- If the facility is becoming a new Major Source,
- An offset threshold will be surpassed, or
- A Stationary Source Increase in Permitted Emissions (SSIPE) public notice is triggered

This project only concerns VOC emissions. This facility acknowledges that its VOC emissions are already above the Offset and Major Source Thresholds for VOC emissions. Additionally, since there is no annual emissions increase associated with this project and this facility has not banked any emissions, SSPE1 calculations are not necessary.

4. Post Project Stationary Source Potential to Emit (SSPE2)

Pursuant to Section 4.10 of District Rule 2201, the Post Project Stationary Source Potential to Emit (SSPE2) is the Potential to Emit (PE) from all units with valid Authorities to Construct (ATC) or Permits to Operate (PTO) at the Stationary Source and the quantity of emission reduction credits (ERC) which have been banked since September 19, 1991 for Actual Emissions Reductions that have occurred at the source, and which have not been used on-site.

SSPE2 calculations are necessary to aid the following determinations:
- If the facility is becoming a new Major Source,
- An offset threshold will be surpassed, or
- A Stationary Source Increase in Permitted Emissions (SSIPE) public notice is triggered

This project only concerns VOC emissions. This facility acknowledges that its VOC emissions are already above the Offset and Major Source Thresholds for VOC emissions. Additionally, since there is no annual emissions increase associated with this project and this facility has not banked any emissions, SSPE2 calculations are not necessary.

5. Major Source Determination

This source is an existing Major Source for VOC emissions and will remain a Major Source for VOC. No change in other pollutants are proposed or expected as a result of this project.

6. Baseline Emissions (BE)

The BE calculation (in lbs/year) is performed pollutant-by-pollutant for each unit within the project, to calculate the QNEC and if applicable, to determine the amount of offsets required.

Pursuant to Section 3.7 of District Rule 2201, BE = Pre-project Potential to Emit for:

- Any unit located at a non-Major Source,
- Any Highly-Utilized Emissions Unit, located at a Major Source,
- Any Fully-Offset Emissions Unit, located at a Major Source, or
- Any Clean Emissions Unit, located at a Major Source.

otherwise,

BE = Historic Actual Emissions (HAE), calculated pursuant to Section 3.22 of District Rule 2201.

Since all permit units in this project are new units,

BE = 0

7. SB 288 Major Modification

SB 288 Major Modification is defined in 40 CFR Part 51.165 as "*any physical change in or change in the method of operation of a major stationary source that would result in a significant net emissions increase of any pollutant subject to regulation under the Act.*"

As discussed in Section VII.C.5 above, the facility is an existing Major Source for VOC; however, the project by itself would need to be a significant increase in order to trigger a Major Modification. The emissions units within this project have a total potential to emit for VOC which is greater than the SB 288 Major Modification threshold (see table below). Therefore, SB 288 Major Modification calculation is required.

SB 288 Major Modification Thresholds (Existing Major Source)			
Pollutant	PE - HAE (lb/year)	Threshold (lb/year)	SB 288 Major Modification Calculation Required?
NO_x	>50,000	50,000	Yes
SO_x	<80,000	80,000	No
PM_{10}	>30,000	30,000	Yes
VOC	>50,000	50,000	Yes

SB 288 Major Modification Calculation

Since the emissions units in this project are all new units,

Baseline Actual Emissions (BAE) = 0

The net emissions increase* for the project, calculated as the sum of the differences between the Potential to Emit ($PE2_{new\ units}$ as calculated in Section VII.C.8) and the baseline actual emissions (BAE) for the new emissions units, is greater than the values listed in the table above. Therefore the project is an SB 288 major modification.

*emissions increases as calculated above for new and modified emissions units less than or equal to 0.5 lb/day round to zero

8. Federal Major Modification

District Rule 2201, Section 3.17 states that Federal Major Modifications are the same as "Major Modification" as defined in 40 CFR 51.165 and part D of Title I of the CAA. SB 288 Major Modifications are not Federal Major Modifications if they meet the criteria of the "Less-Than-Significant Emissions Increase" exclusion.

A Less-Than-Significant Emissions Increase exclusion is for an emissions increase for the project, or a Net Emissions Increase for the project (as defined in 40 CFR 51.165 (a)(2)(ii)(B) through (D), and (F)), that is not significant for a given regulated NSR pollutant, and therefore is not a Federal Major Modification for that pollutant.

- To determine the post-project projected actual emissions from existing units, the provisions of 40 CFR 51.165 (a)(1)(xxviii) shall be used.
- To determine the pre-project baseline actual emissions, the provisions of 40 CFR 51.165 (a)(1)(xxxv)(A) through (D) shall be used.
- If the project is determined not to be a Federal Major Modification pursuant to the provisions of 40 CFR 51.165 (a)(2)(ii)(B), but there is a reasonable possibility that the project may result in a significant emissions increase, the owner or operator shall comply with all of the provisions of 40 CFR 51.165 (a)(6) and (a)(7).
- Emissions increases calculated pursuant to this section are significant if they exceed the significance thresholds specified in the table below.

Pollutant	Threshold (lb/year)
VOC	0
NOx	0
PM10	30,000
SOx	80,000

The Net Emissions Increases (NEIs) for purposes of determination of a "Less-Than-Significant Emissions Increase" exclusion will be calculated below to determine if this project qualifies for such an exclusion.

Net Emission Increase for New Units (NEI_N)

Per 40 CFR 51.165 (a)(2)(ii)(D) for new emissions units in this project,

$NEI_N = PE2_N - BAE$

Since these are new units, BAE for these units is zero and,

$NEI_N = PE2_N$

where $PE2_N$ is the potential emissions from the new tanks and calculated in Appendix F.

Thus,

$NEI_N = PE2_N = 143{,}791$ lb-VOC/year

Net Emission Increase for Existing Units (NEI_E)

Tanks operating in a winery are not truly independent emissions units and thus their potential annual emissions must be established with consideration of all the other associated tanks in the facility. As calculated above, $PE2_N$, is determined as the difference between the post project and pre project potential emissions from the wine production operation based on the collective physical capacity of the processing equipment at the facility. $PE2_N$ thus represents the maximum potential increase in actual emissions resulting from this project. As well, this project will not cause any other debottlenecking of the facility's operations which would have the potential for additional emissions.

The NEI for this project is greater than the Federal Major Modification threshold of 0 lb-VOC/year. Therefore, this project does not qualify for a "Less-Than-Significant Emissions Increase" exclusion and is thus determined to be a Federal Major Modification.

9. Quarterly Net Emissions Change (QNEC)

The QNEC is calculated solely to establish emissions that are used to complete the District's PAS emissions profile screen. The QNEC shall be calculated as follows:

QNEC = PE2 - PE1, where:

QNEC = Quarterly Net Emissions Change for each emissions unit, lb/qtr.
PE2 = Post Project Potential to Emit for each emissions unit, lb/qtr.
PE1 = Pre-Project Potential to Emit for each emissions unit, lb/qtr.
Since all winery tanks at this facility are limited to the emissions specified by the SLC, both pre-project and post project, there are no changes in the collective Potential to Emit of the tanks as a result of this project. Therefore, the QNEC is zero for all units in this project.

VIII. Compliance

Rule 2201 New and Modified Stationary Source Review Rule

A. Best Available Control Technology (BACT)

1. BACT Applicability

BACT requirements are triggered on a pollutant-by-pollutant basis and on an emissions unit-by-emissions unit basis for the following*:

a. Any new emissions unit with a potential to emit exceeding two pounds per day,
b. The relocation from one Stationary Source to another of an existing emissions unit with a potential to emit exceeding two pounds per day,
c. Modifications to an existing emissions unit with a valid Permit to Operate resulting in an AIPE exceeding two pounds per day, and/or

d. Any new or modified emissions unit, in a stationary source project, which results in a Major Modification.

*Except for CO emissions from a new or modified emissions unit at a Stationary Source with an SSPE2 of less than 200,000 pounds per year of CO.

a. New emissions units – PE > 2 lb/day

As seen in Section VII.C.2 of this evaluation, the applicant is proposing to install 76 new wine fermentation and storage tanks with a PE greater than 2 lb/day for VOC for both the storage and fermentation operations (permits '-701-0 through '-776-0). Thus BACT is triggered for VOC for these emissions units.

b. Relocation of emissions units – PE > 2 lb/day

As discussed in Section I above, there are no emissions units being relocated from one stationary source to another; therefore BACT is not triggered.

c. Modification of emissions units – AIPE > 2 lb/day

As discussed in Section I above, there are no modified emissions units associated with this project; therefore BACT is not triggered.

d. Major Modification

As discussed in Section VII.C.7 above, this project does constitute a Major Modification for VOC emissions; therefore BACT is triggered for VOC for all emissions units affected by this stationary source project.

2. BACT Guideline

BACT Guideline 5.4.14, *Wine Fermentation Tanks*, applies to all fermentation tanks in this project. (See Appendix G)

BACT Guideline 5.4.13, *Wine Storage Tank* applies to all wine storage tanks in this project. (See Appendix H)

3. Top-Down BACT Analysis

Per Permit Services Policies and Procedures for BACT, a Top-Down BACT analysis shall be performed as a part of the application review for each application subject to the BACT requirements pursuant to the District's NSR Rule.

Fermentation Tanks
Pursuant to the attached Top-Down BACT Analysis (see Appendix G), BACT has been satisfied with the following:

VOC: Open tank vented to the atmosphere with the average fermentation temperature not exceeding 95 °F.

The following conditions will be placed on the ATC's of all fermentation tank emissions units affected by this project to ensure compliance with the requirements of BACT for wine fermentation tanks:

- *The average fermentation temperature of each batch of must fermented in this tank shall not exceed 95 °F, calculated as the average of all temperature measurements for the batch taken at least every 12 hours over the course of the fermentation. [District Rule 2201]*

- *For each batch of must fermented in this tank, the operator shall record the fermentation completion date, the total gallons of must fermented, the average fermentation temperature and the uncontrolled fermentation emissions and any fermentation emission reductions (calculated per the emission factors given in District Rule 4694). The information shall be recorded by the tank Permit to Operate number and by wine type, stated as either red wine or white wine. [District Rules 2201 and 4694]*

Wine Storage Tanks

Pursuant to the attached Top-Down BACT Analysis (see Appendix H), BACT has been satisfied with the following:

VOC: Insulated tank, pressure/vacuum valve set within 10% of the maximum allowable working pressure of the tank, "gas tight" tank operation and achieve and maintain a continuous storage temperature not exceeding 75 °F within 60 days of completion of fermentation.

The DEL for wine storage tanks will be stated in the equipment description as an "insulated" tank and by placing the following conditions on the ATC:

- *When used for wine storage, this tank shall be equipped with and operated with a pressure-vacuum relief valve, which shall operate within 10% of the maximum allowable working pressure of the tank, operate in accordance with the manufacturer's instructions, and be permanently labeled with the operating pressure settings. [District Rules 2201 and 4694]*

- *When used for wine storage, the pressure-vacuum relief valve and storage tank shall remain in a gas-tight condition, except when the operating pressure of the tank exceeds the valve set pressure. A gas-tight condition shall be determined by measuring the gas leak in accordance with the procedures in EPA Method 21. [District Rules 2201 and 4694]*

- *The temperature of the wine stored in this tank shall be maintained at or below 75 degrees Fahrenheit. For each batch of wine, the operator shall achieve the storage temperature of 75 degrees Fahrenheit or less within 60 days after completing fermentation, and shall maintain records to show when the required storage temperature of 75 degrees Fahrenheit or less was achieved. [District Rules 2201 and 4694]*

B. Offsets

1. Offset Applicability

Pursuant to Section 4.5.3, offset requirements shall be triggered on a pollutant by pollutant basis and shall be required if the Post Project Stationary Source Potential to Emit (SSPE2) equals to or exceeds the offset threshold levels in Table 4-1 of Rule 2201.

Facility emissions are already above the Offset and Major Source Thresholds for VOC emissions; therefore, offsets are triggered.

2. Quantity of Offsets Required

As discussed above, the facility is an existing Major Source for VOC and the SSPE2 is greater than the offset thresholds; therefore offset calculations will be required for this project.

Per Sections 4.7.1 and 4.7.3, the quantity of offsets in pounds per year for VOC is calculated as follows for sources with an SSPE1 greater than the offset threshold levels before implementing the project being evaluated.

Offsets Required (lb/year) = (Σ[PE2 – BE] + ICCE) x DOR, for all new or modified emissions units in the project,

Where,
PE2 = Post Project Potential to Emit, (lb/year)
BE = Baseline Emissions, (lb/year)
ICCE = Increase in Cargo Carrier Emissions, (lb/year)
DOR = Distance Offset Ratio, determined pursuant to Section 4.8

BE = Pre-project Potential to Emit for:

- Any unit located at a non-Major Source,
- Any Highly-Utilized Emissions Unit, located at a Major Source,
- Any Fully-Offset Emissions Unit, located at a Major Source, or
- Any Clean Emissions Unit, Located at a Major Source.

otherwise,

BE = Historic Actual Emissions (HAE)

As discussed in Appendix D, potential emissions from wine tanks must be determined with consideration of the total tank population at the facility. As established in District Project N-1103868, all tanks at this facility meet the District' determination of achieved-in-practice BACT (and are thus Clean Emission Units), therefore ΣBE is taken to be the pre-project Potential to Emit of all wine tanks at the facility which is given by the existing Specific Limiting Condition on the permits:

ΣBE = 292,950 lb-VOC/year

Post project, the new tanks will be covered by the SLC which is unchanged by this project and therefore:

ΣPE2 = 292,950 lb-VOC/year

There are no increases in cargo carrier emissions. Therefore

Offsets Required (lb/year) = Σ[PE2 – BE] x DOR = [ΣPE2 - ΣBE] x DOR
Σ BE = 292,950 lb-VOC/year as stated above
Σ PE2 = 292,950 lb-VOC/year as stated above
Offsets Required (lb/year) = [292,950 – 292,950] x DOR = 0 lb-VOC/year

As demonstrated in the calculation above, the amount of offsets is zero; therefore, offsets will not be required for this project.

C. Public Notification

1. Applicability

Public noticing is required for:
a. Any new Major Source, which is a new facility that is also a Major Source,
b. Major Modifications,
c. Any new emissions unit with a Potential to Emit greater than 100 pounds during any one day for any one pollutant,
d. Any project which results in the offset thresholds being surpassed, and/or
e. Any project with an SSIPE of greater than 20,000 lb/year for any pollutant.

a. New Major Source

New Major Sources are new facilities, which are also Major Sources. Since this is not a new facility, public noticing is not required for this project for New Major Source purposes.

b. Major Modification

As demonstrated in VII.C.7, this project is a Major Modification; therefore, public noticing for Major Modification purposes is required.

c. PE > 100 lb/day

Applications which include a new emissions unit with a Potential to Emit greater than 100 pounds during any one day for any pollutant will trigger public noticing requirements. As indicated in Section VII.C.2 above, the new fermentation emissions units associated in this project all have a Potential to Emits exceeding 100 lb-VOC/day. Therefore, public noticing for PE > 100 lb/day purposes is required.

d. Offset Threshold

Since this project concerns only VOC emissions and this facility was a major source for VOC prior to this project (SSPE> 50,000 lb-VOC/year), the offset threshold was not surpassed in this project; therefore public noticing is not required for offset purposes.

e. SSIPE > 20,000 lb/year

Public notification is required for any permitting action that results in a Stationary Source Increase in Permitted Emissions (SSIPE) of more than 20,000 lb/year of any affected pollutant. According to District policy, the SSIPE is calculated as the Post Project Stationary Source Potential to Emit (SSPE2) minus the Pre-Project Stationary Source Potential to Emit (SSPE1), i.e. SSIPE = SSPE2 – SSPE1. Since there is no change in the potential to emit for the facility as a result of this project, SSIPE = 0 and public noticing for SSIPE purposes is not required.

2. Public Notice Action

As discussed above, public noticing is required for this project since it is both a Major Modification and includes new emissions units with a Potential to emit exceeding 100 lb/day. Therefore, public notice documents will be submitted to the California Air Resources Board (CARB) and EPA and a public notice will be published in a local newspaper of general circulation prior to the issuance of the ATC for this equipment.

D. Daily Emission Limits (DELs)

Daily Emissions Limitations (DELs) and other enforceable conditions are required by Section 3.15 to restrict a unit's maximum daily emissions, to a level at or below the emissions associated with the maximum design capacity. Per Sections 3.15.1 and 3.15.2, the DEL must be contained in the latest ATC and contained in or enforced by the latest PTO and enforceable, in a practicable manner, on a daily basis. DELs are also required to enforce the applicability of BACT.

For all fermentation emissions units, the DEL is stated in the form of an emission factor (lb-VOC/day-1000 gallon tank capacity) and the capacity rating of the tank as listed on the permit. These units are also subject to a separate annual emission limit (expressed in lb-VOC per year) in the form of a Specific Limiting Condition (SLC) listed on each permit.
For all wine storage tank emissions units affected by this project, the DEL is stated in the form of a daily limit on tank throughput and a maximum allowable ethanol content for wine handled in the tank. These units are also subject to a separate annual emission limit (expressed in lb-VOC per year) in the form of a Specific Limiting Condition (SLC) listed on each permit.

Proposed Rule 2201 (DEL) Conditions:

- *The VOC emissions for fermentation operations in this tank shall not exceed 1.62 lb/day per 1000 gallons of tank capacity. [District Rule 2201]*

- *The ethanol content of wine in this tank shall not exceed 23.9 percent by volume. [District Rule 2201]*

- *When this tank is used for wine storage, the daily tank throughput, in gallons, shall not exceed 5 times the maximum nominal tank capacity stated on the equipment description. [District Rule 2201]*

- *Total combined annual VOC emissions from all wine fermentation and storage operations at this facility shall not exceed 292,950 lb per year. [District Rule 2201]*

- *Combined annual VOC emissions from all wine storage operations under shall be determined as the sum of the emissions for each individual wine movement based on the volume transferred in each wine movement and the batch-specific wine storage emission factor calculated using the equation(s) specified within this permit. [District Rule 2201] Y*

- *The annual VOC wine storage emission factor (EF) for each wine transfer shall be selected from the following emission factors based on the ethanol content of the wine transferred: For wine with ethanol content less than 14 volume percent: EF = 0.198 lb-VOC/1000 gallons; For wine with ethanol content between 14 and 21 volume percent, EF = 0.314 lb-VOC/1000 gallons; For wine with ethanol content greater than 21 volume percent, EF = 0.363 lb-VOC/1000 gallon. [District Rule 2201]*

- *Total annual VOC emissions from wine fermentation operations shall be determined by the following formula: Total annual VOC emissions = (Total Annual Red Wine Production-gal) x (6.2 lb-VOC/1000 gal) + (Total Annual White Wine Production-gal) x (2.5 lb-VOC/1000 gal).[District Rule 2201]*

E. Compliance Assurance

1. Source Testing

Pursuant to District Policy APR 1705, source testing is not required to demonstrate compliance with Rule 2201.

2. Monitoring

No monitoring is required to demonstrate compliance with Rule 2201.

3. Recordkeeping

Recordkeeping is required to demonstrate compliance with the offset, public notification and daily emission limit requirements of Rule 2201. Recordkeeping is also required for winery tanks pursuant to District Rule 4694, *Wine Fermentation and Storage Tanks*. The following conditions will appear on the permits to operate:

- *For each batch of must fermented in this tank, the operator shall record the fermentation completion date, the total gallons of must fermented, the average fermentation temperature and the uncontrolled fermentation emissions and fermentation emission reductions (calculated per the emission factors given in District Rule 4694). The information shall be recorded by the tank Permit to Operate number*

and by wine type, stated as either red wine or white wine. [District Rules 2201 and 4694]

- *Separate annual records each of total red wine and total white wine produced by fermentation at this facility, based on values reported to the Alcohol and Tobacco Tax and Trade Bureau (TTB), U.S. Department of the Treasury, shall be kept. [District Rule 2201]*
- *When this tank is used for wine storage, daily throughput records, including records of filling and emptying operations, the dates of such operations, a unique identifier for each batch, the volume percent ethanol in the batch, and the volume of wine transferred, shall be maintained. [District Rules 2201 and 4694]*
- *When this tank is used for wine storage, the operator shall record, on a weekly basis, the total gallons of wine contained in the tank and the maximum temperature of the stored wine. [District Rules 2201 and 4694]*
- *Records of total annual fermentation and total annual storage emissions, including calculation methods and parameters used, shall be maintained. [District Rule 1070 and 2201]*
- *All records shall be retained on-site for a period of at least five years and made available for District inspection upon request. [District Rules 2201 and 4694]*

4. Reporting

No reporting is required to demonstrate compliance with Rule 2201.

F. Ambient Air Quality Analysis

Section 4.14.1 of this Rule requires that an ambient air quality analysis (AAQA) be conducted for the purpose of determining whether a new or modified Stationary Source will cause or make worse a violation of an air quality standard. However, since this project involves only VOC and no ambient air quality standard exists for VOC, an AAQA is not required for this project.

G. Compliance Certification

The compliance certification is required for any project, which constitutes a New Major Source or a Federal Major Modification.

Section 4.15.2 of this Rule requires the owner of a new Major Source or a source undergoing a Title I Modification to demonstrate to the satisfaction of the District that all other Major Sources owned by such person and operating in California are in compliance or are on a schedule for compliance with all applicable emission limitations and standards. As discussed in the preceding sections, this project does constitute a Federal Major Modification, therefore this requirement is applicable.

Attached in Appendix I is Sutter Home's compliance certification.

H. Alternative Siting Analysis

Alternative siting analysis is required for any project, which constitutes a New Major Source or a Federal Major Modification.

This proposed project will be installed at an existing winery with 476 existing wine processing tanks, located in a rural area of San Joaquin County. The area is a long-established grape-growing and processing region and a number of wineries are present in the immediate area. The existing facility is vertically integrated to receive bulk truck shipments of grapes, crush and press the grapes, ferment the juice to wine, and perform post fermentation processing to produce finished wine. To support these various operations the facility features a large amount of support equipment, services and structures such as raw material receiving stations, crushers, pumps and piping, filtering and refrigeration units, electric and natural gas utilities, warehouses, laboratories, shipping facilities and administration buildings.

The applicant proposes to install 76 new winery tanks. The existing plant infrastructure and processing equipment including the crushing and pressing equipment are adequately sized to support operation of the proposed post project tank population (as demonstrated in Appendix F). Installation of the project at an alternate site would not be practical or feasible based on:

- Since wine tanks operate synergistically in post-fermentation processing and blending, the potential production capacity of the new tanks could not be fully met by installing the new tanks at an alternate location.

- Use of an alternate project site would require installation of a complete new plant infrastructure and supporting processes and equipment to support the independent operation, thus duplicating the infrastructure already present at the existing plant. Construction of the project at an alternate site would be expected to produce a significantly greater environmental impact due to both 1) a much larger initial construction project and 2) incrementally larger on-going emissions and other impacts due to operation of redundant infrastructure and support systems as well as emissions associated with product transportation required to achieve some degree of integration with the existing facility.

Rule 2520 Federally Mandated Operating Permits

This facility became subject to this rule on February 22, 2011. Per Section 5.1.1, the facility must file a complete application for its Title V permit no later than 12 months after this date.

Rule 4001 New Source Performance Standards (NSPS)

This rule incorporates NSPS from Part 60, Chapter 1, Title 40, Code of Federal Regulations (CFR); and applies to all new sources of air pollution and modifications of existing sources of air pollution listed in 40 CFR Part 60. However, no subparts of 40 CFR Part 60 apply to wine fermentation and storage tank operations.

Rule 4002 National Emission Standards for Hazardous Air Pollutants (NESHAPs)

This rule incorporates NESHAPs from Part 61, Chapter I, Subchapter C, Title 40, CFR and the NESHAPs from Part 63, Chapter I, Subchapter C, Title 40, CFR; and applies to all sources of hazardous air pollution listed in 40 CFR Part 61 or 40 CFR Part 63. However, no subparts of 40 CFR Part 61 or 40 CFR Part 63 apply to wine fermentation and storage tank operations.

Rule 4102 Nuisance

Rule 4102 states that no air contaminant shall be released into the atmosphere which causes a public nuisance. Public nuisance conditions are not expected as a result of these operations, provided the equipment is well maintained. Therefore, the following condition will be listed on each ATC to ensure compliance:

- {98} No air contaminant shall be released into the atmosphere which causes a public nuisance. [District Rule 4102]

California Health & Safety Code 41700 (Health Risk Assessment)

District Policy APR 1905 – Risk Management Policy for Permitting New and Modified Sources specifies that for an increase in hazardous air pollutants (HAP) associated with a proposed new source or modification, the District perform an analysis to determine the possible impact to the nearest resident or worksite.

Ethanol is not an HAP as defined by Section 44321 of the California Health and Safety Code. Therefore, there are no increases in HAP emissions associated with any emission units in this project, therefore a health risk assessment is not necessary and no further risk analysis is required.

District Rule 4694 Wine Fermentation and Storage Tanks

The purpose of this rule is to reduce emissions of volatile organic compounds (VOC) from the fermentation and bulk storage of wine, or achieve equivalent reductions from alternative emission sources. This rule is applicable to all facilities with fermentation emissions in excess of 10 tons-VOC/year. The storage tank provisions of Section 5.2 of this rule apply only to tanks with capacity in excess of 5,000 gallons and/or not constructed of wood or concrete.

Section 5.1 requires the winery operator achieve Required Annual Emissions Reductions (RAER) equal to at least 35% of the winery's Baseline Fermentation Emissions (BFE). Per the definition of RAER in Section 3.25 of the Rule, the RAER may be achieved by any combination of Fermentation Emission Reductions (FER), Certified Emission Reductions (CER) or District Obtained Emission Reductions (DOER) as established in the facility's District-approved Rule 4694 Compliance Plan, due every three years on December 1st beginning in 2006. The facility has submitted the required plan to the District and is currently satisfying the required emission reductions in the form of Certified Emission Reductions.

Section 5.2 places specific restrictions on wine storage tanks with 5,000 gallons or more in capacity when such tanks are not constructed of wood or concrete. Section 5.2.1 requires

these tanks to be equipped and operated with a pressure-vacuum relief valve meeting all of the following requirements:

- The pressure-vacuum relief valve shall operate within 10% of the maximum allowable working pressure of the tank,
- The pressure-vacuum relief valve shall operate in accordance with the manufacturer's instructions, and
- The pressure-vacuum relief valve shall be permanently labeled with the operating pressure settings.
- The pressure-vacuum relief valve and storage tank shall remain in a gas-tight condition except when the operating pressure of the tank exceeds the valve set pressure. A gas-tight condition shall be determined by measuring the gas leak in accordance with the procedures in EPA Method 21.

Therefore, the following conditions will be placed on the permit for each storage tank with capacity greater than 5,000 gallons and not constructed of concrete or wood to ensure compliance with the requirements of Section 5.2.1:

- *When used for wine storage, this tank shall be equipped with and operated with a pressure-vacuum relief valve, which shall operate within 10% of the maximum allowable working pressure of the tank, operate in accordance with the manufacturer's instructions, and be permanently labeled with the operating pressure settings. [District Rules 2201 and 4694]*

- *When this tank is used for wine storage, the pressure-vacuum relief valve and storage tank shall remain in a gas-tight condition, except when the operating pressure of the tank exceeds the valve set pressure. A gas-tight condition shall be determined by measuring the gas leak in accordance with the procedures in EPA Method 21 [District Rules 2201 and 4694]*

Section 5.2.2 requires that the temperature of the stored wine be maintained at or below 75° F.

The following conditions will be placed on the permit for each storage tank with capacity greater than 5,000 gallons and not constructed of concrete or wood to ensure compliance with the requirements of Section 5.2.2:

- *The temperature of the wine stored in this tank shall be maintained at or below 75 degrees Fahrenheit. For each batch of wine, the operator shall achieve the storage temperature of 75 degrees Fahrenheit or less within 60 days after completing fermentation, and shall maintain records to show when the required storage temperature of 75 degrees Fahrenheit or less was achieved. [District Rules 2201 and 4694]*

Every three years, Section 6.1 and 6.2 require the facility to submit a Three-Year Compliance Plan and a Three-Year Compliance Plan Verification respectively. Section 6.3 requires that an Annual Compliance Plan Demonstration be submitted to the District no later than February 1 of each year to show compliance with the applicable requirements of the Rule. Section 6.4 requires that records required by this rule be maintained, retained on-site for a minimum of five years, and made available to the APCO upon request. Section 6.4.3 requires that all monitoring be performed for any Certified Emission

Reductions as identified in the facility's Three-Year Compliance Plan and that the records of all monitoring be maintained. The following conditions placed on each ATC ensure compliance:

- *A Three-Year Compliance Plan that demonstrates compliance with the requirements of Section 5.1 of District Rule 4694 for each year of the applicable compliance period shall be submitted to the District by no later than December 1, 2012, and every three years thereafter on or before December 1. [District Rule 4694]*

- *A Three-Year Compliance Plan Verification that demonstrates that the Three-Year Compliance Plan elements are in effect shall be submitted to the District by no later than July 1, 2013, and every three years thereafter on or before July 1. [District Rule 4694]*

- *An Annual Compliance Plan Demonstration that shows compliance with the applicable requirements of this rule shall be submitted to the District by no later than March 1, 2012, and every year thereafter on or before March 1. [District Rule 4694]*

- *Operators using CER to mitigate fermentation emissions shall perform all monitoring and recordkeeping, as established in their approved Three-Year Compliance Plan, and shall maintain all records necessary to demonstrate compliance. [District Rule 4694]*

- *Operators using District Obtained Emission Reductions (DOER) shall submit payment of DOER and administrative fees to the District no later than March 1, of the first year in the applicable compliance period. [District Rule 4694]*

Section 6.4.1 requires that records be kept for each fermentation batch. The following condition will be placed on the ATC for each fermentation tank to ensure compliance:

- *For each batch of must fermented in this tank, the operator shall record the fermentation completion date, the total gallons of must fermented, the average fermentation temperature and the uncontrolled fermentation emissions and fermentation emission reductions (calculated per the emission factors given in District Rule 4694). The information shall be recorded by the tank Permit to Operate number and by wine type, stated as either red wine or white wine. [District Rules 2201 and 4694]*

Section 6.4.2 requires that weekly records be kept of wine volume and temperature in each storage tank. Therefore, the following conditions will be placed on the permit for each storage tank to ensure compliance with the requirements of Section 6.4.2:

- *When this tank is used for wine storage, daily throughput records, including records of filling and emptying operations, the dates of such operations, a unique identifier for each batch, the volume percent ethanol in the batch, and the volume of wine transferred, shall be maintained. [District Rules 2201 and 4694]*

- *When this tank is used for wine storage, the operator shall record, on a weekly basis, the total gallons of wine contained in the tank and the maximum temperature of the stored wine.[District Rules 2201 and 4694]*

Section 6.4.3 requires that all monitoring be performed for any Certified Emission Reductions as identified in the facility's Three-Year Compliance Plan and that the records of all monitoring be maintained. The following condition on each permit ensures compliance:

- *Operators using CER to mitigate fermentation emissions shall perform all monitoring and recordkeeping, as established in their approved Three-Year Compliance Plan, and shall maintain all records necessary to demonstrate compliance. [District Rule 4694]*

California Health & Safety Code 42301.6 (School Notice)

The District has verified that this site is not located within 1,000 feet of a school. Therefore, pursuant to California Health and Safety Code 42301.6, a school notice is not required.

California Environmental Quality Act (CEQA)

California Environmental Quality ACT (CEQA)
The California Environmental Quality Act (CEQA) requires each public agency to adopt objectives, criteria, and specific procedures consistent with CEQA Statutes and the CEQA Guidelines for administering its responsibilities under CEQA, including the orderly evaluation of projects and preparation of environmental documents. The San Joaquin Valley Unified Air Pollution Control District (District) adopted its *Environmental Review Guidelines* (ERG) in 2001. The basic purposes of CEQA are to:

- Inform governmental decision-makers and the public about the potential, significant environmental effects of proposed activities.
- Identify the ways that environmental damage can be avoided or significantly reduced.
- Prevent significant, avoidable damage to the environment by requiring changes in projects through the use of alternatives or mitigation measures when the governmental agency finds the changes to be feasible.
- Disclose to the public the reasons why a governmental agency approved the project in the manner the agency chose if significant environmental effects are involved.

The County of San Joaquin is the public agency having principal responsibility for approving the Project. As such, the County of San Joaquin served as the Lead Agency for the project. Consistent with CEQA Guidelines §15081, a Negative Declaration was prepared and certified by the County of San Joaquin.
The District is a Responsible Agency for the project because of its discretionary approval power over the project via its Permits Rule (Rule 2010) and New Source Review Rule (Rule 2201), (CEQA Guidelines §15381). As a Responsible Agency the District complies with CEQA by considering the Negative Declaration prepared by the Lead Agency, and by reaching its own conclusion on whether and how to approve the project (CEQA Guidelines

§15096). The District has considered the Negative Declaration certified by the County of San Joaquin.

The District's engineering evaluation of the project (this document) demonstrates that compliance with District rules and permit conditions would reduce Stationary Source emissions from the project to levels below the District's thresholds of significance for criteria pollutants. Thus, the District concludes that through a combination of project design elements and permit conditions, project specific stationary source emissions will be reduced and mitigated to less than significant levels. The District has determined that no additional findings are required (CEQA Guidelines §15096(h)).

IX. Recommendation

Compliance with all applicable rules and regulations is expected. Pending a successful NSR Public Noticing period, issue the proposed Authorities to Construct subject to the permit conditions on the attached draft Authorities to Construct in Appendix J.

X. Billing Information

Billing information is attached in Appendix K.

Appendices

A: Equipment Description
B: Daily PE1 for Storage Tank Emissions Units
C: Daily PE1 for Fermentation Tank Emissions Units
D: District FYI-114, *Estimating VOC Emissions from Wine Storage Tanks*
E: Draft District Policy: *Calculation of the Potential to Emit for VOC Emissions from Wine Fermentation and Storage Operations*
F: Annual PE2 Calculation
G: BACT Guideline 5.4.14 and Top-Down Analysis for Wine Fermentation Tanks
H: BACT Guideline 5.4.13 and Top-Down Analysis for Winery Storage Tanks
I: Compliance Certification
J: Draft ATCs
K: Billing Information

Appendix A
Equipment Description

Equipment Description
District Project N-1110296

Permit Number	Description
N-7855- 701 -0	202,638 GALLON WHITE WINE FERMENTATION TANK AND WINE STORAGE TANK (TANK 1200) WITH PRESSURE/VACUUM VALVE AND INSULATION
N-7855- 702 -0	202,638 GALLON WHITE WINE FERMENTATION TANK AND WINE STORAGE TANK (TANK 1201) WITH PRESSURE/VACUUM VALVE AND INSULATION
N-7855- 703 -0	202,638 GALLON WHITE WINE FERMENTATION TANK AND WINE STORAGE TANK (TANK 1202) WITH PRESSURE/VACUUM VALVE AND INSULATION
N-7855- 704 -0	202,638 GALLON WHITE WINE FERMENTATION TANK AND WINE STORAGE TANK (TANK 1203) WITH PRESSURE/VACUUM VALVE AND INSULATION
N-7855- 705 -0	202,638 GALLON WHITE WINE FERMENTATION TANK AND WINE STORAGE TANK (TANK 1204) WITH PRESSURE/VACUUM VALVE AND INSULATION
N-7855- 706 -0	202,638 GALLON WHITE WINE FERMENTATION TANK AND WINE STORAGE TANK (TANK 1205) WITH PRESSURE/VACUUM VALVE AND INSULATION
N-7855- 707 -0	202,638 GALLON WHITE WINE FERMENTATION TANK AND WINE STORAGE TANK (TANK 1206) WITH PRESSURE/VACUUM VALVE AND INSULATION
N-7855- 708 -0	202,638 GALLON WHITE WINE FERMENTATION TANK AND WINE STORAGE TANK (TANK 1207) WITH PRESSURE/VACUUM VALVE AND INSULATION
N-7855- 709 -0	202,638 GALLON WHITE WINE FERMENTATION TANK AND WINE STORAGE TANK (TANK 1208) WITH PRESSURE/VACUUM VALVE AND INSULATION
N-7855- 710 -0	202,638 GALLON WHITE WINE FERMENTATION TANK AND WINE STORAGE TANK (TANK 1209) WITH PRESSURE/VACUUM VALVE AND INSULATION
N-7855- 711 -0	202,638 GALLON WHITE WINE FERMENTATION TANK AND WINE STORAGE TANK (TANK 1210) WITH PRESSURE/VACUUM VALVE AND INSULATION
N-7855- 712 -0	202,638 GALLON WHITE WINE FERMENTATION TANK AND WINE STORAGE TANK (TANK 1211) WITH PRESSURE/VACUUM VALVE AND INSULATION
N-7855- 713 -0	202,638 GALLON WHITE WINE FERMENTATION TANK AND WINE STORAGE TANK (TANK 1212) WITH PRESSURE/VACUUM VALVE AND INSULATION
N-7855- 714 -0	202,638 GALLON WHITE WINE FERMENTATION TANK AND WINE STORAGE TANK (TANK 1213) WITH PRESSURE/VACUUM VALVE AND INSULATION
N-7855- 715 -0	202,638 GALLON WHITE WINE FERMENTATION TANK AND WINE STORAGE TANK (TANK 1214) WITH PRESSURE/VACUUM VALVE AND INSULATION
N-7855- 716 -0	202,638 GALLON WHITE WINE FERMENTATION TANK AND WINE STORAGE TANK (TANK 1215) WITH PRESSURE/VACUUM VALVE AND INSULATION
N-7855- 717 -0	202,638 GALLON WHITE WINE FERMENTATION TANK AND WINE STORAGE TANK (TANK 1216) WITH PRESSURE/VACUUM VALVE AND INSULATION

N-7855- 718 -0 202,638 GALLON WHITE WINE FERMENTATION TANK AND WINE STORAGE TANK (TANK 1217) WITH PRESSURE/VACUUM VALVE AND INSULATION

N-7855- 719 -0 202,638 GALLON WHITE WINE FERMENTATION TANK AND WINE STORAGE TANK (TANK 1218) WITH PRESSURE/VACUUM VALVE AND INSULATION

N-7855- 720 -0 202,638 GALLON WHITE WINE FERMENTATION TANK AND WINE STORAGE TANK (TANK 1400) WITH PRESSURE/VACUUM VALVE AND INSULATION

N-7855- 721 -0 202,638 GALLON WHITE WINE FERMENTATION TANK AND WINE STORAGE TANK (TANK 1401) WITH PRESSURE/VACUUM VALVE AND INSULATION

N-7855- 722 -0 202,638 GALLON WHITE WINE FERMENTATION TANK AND WINE STORAGE TANK (TANK 1402) WITH PRESSURE/VACUUM VALVE AND INSULATION

N-7855- 723 -0 202,638 GALLON WHITE WINE FERMENTATION TANK AND WINE STORAGE TANK (TANK 1403) WITH PRESSURE/VACUUM VALVE AND INSULATION

N-7855- 724 -0 202,638 GALLON WHITE WINE FERMENTATION TANK AND WINE STORAGE TANK (TANK 1404) WITH PRESSURE/VACUUM VALVE AND INSULATION

N-7855- 725 -0 202,638 GALLON WHITE WINE FERMENTATION TANK AND WINE STORAGE TANK (TANK 1405) WITH PRESSURE/VACUUM VALVE AND INSULATION

N-7855- 726 -0 202,638 GALLON WHITE WINE FERMENTATION TANK AND WINE STORAGE TANK (TANK 1406) WITH PRESSURE/VACUUM VALVE AND INSULATION

N-7855- 727 -0 202,638 GALLON WHITE WINE FERMENTATION TANK AND WINE STORAGE TANK (TANK 1407) WITH PRESSURE/VACUUM VALVE AND INSULATION

N-7855- 728 -0 202,638 GALLON WHITE WINE FERMENTATION TANK AND WINE STORAGE TANK (TANK 1408) WITH PRESSURE/VACUUM VALVE AND INSULATION

N-7855- 729 -0 202,638 GALLON WHITE WINE FERMENTATION TANK AND WINE STORAGE TANK (TANK 1409) WITH PRESSURE/VACUUM VALVE AND INSULATION

N-7855- 730 -0 202,638 GALLON WHITE WINE FERMENTATION TANK AND WINE STORAGE TANK (TANK 1410) WITH PRESSURE/VACUUM VALVE AND INSULATION

N-7855- 731 -0 202,638 GALLON WHITE WINE FERMENTATION TANK AND WINE STORAGE TANK (TANK 1411) WITH PRESSURE/VACUUM VALVE AND INSULATION

N-7855- 732 -0 202,638 GALLON WHITE WINE FERMENTATION TANK AND WINE STORAGE TANK (TANK 1412) WITH PRESSURE/VACUUM VALVE AND INSULATION

N-7855- 733 -0 202,638 GALLON WHITE WINE FERMENTATION TANK AND WINE STORAGE TANK (TANK 1413) WITH PRESSURE/VACUUM VALVE AND INSULATION

N-7855- 734 -0 202,638 GALLON WHITE WINE FERMENTATION TANK AND WINE STORAGE TANK (TANK 1414) WITH PRESSURE/VACUUM VALVE AND INSULATION

N-7855- 735 -0 202,638 GALLON WHITE WINE FERMENTATION TANK AND WINE STORAGE TANK (TANK 1415) WITH PRESSURE/VACUUM VALVE AND INSULATION

N-7855- 736 -0 202,638 GALLON WHITE WINE FERMENTATION TANK AND WINE STORAGE TANK (TANK 1416) WITH PRESSURE/VACUUM VALVE AND INSULATION

N-7855- 737 -0 202,638 GALLON WHITE WINE FERMENTATION TANK AND WINE STORAGE TANK (TANK 1417) WITH PRESSURE/VACUUM VALVE AND INSULATION

N-7855- 738 -0 202,638 GALLON WHITE WINE FERMENTATION TANK AND WINE STORAGE TANK (TANK 1418) WITH PRESSURE/VACUUM VALVE AND INSULATION

N-7855- 739 -0 366,000 GALLON WHITE WINE FERMENTATION TANK AND WINE STORAGE TANK (TANK 1500) WITH PRESSURE/VACUUM VALVE AND INSULATION

N-7855- 740 -0 366,000 GALLON WHITE WINE FERMENTATION TANK AND WINE STORAGE TANK (TANK 1501) WITH PRESSURE/VACUUM VALVE AND INSULATION

N-7855- 741 -0 366,000 GALLON WHITE WINE FERMENTATION TANK AND WINE STORAGE TANK (TANK 1502) WITH PRESSURE/VACUUM VALVE AND INSULATION

N-7855- 742 -0 366,000 GALLON WHITE WINE FERMENTATION TANK AND WINE STORAGE TANK (TANK 1503) WITH PRESSURE/VACUUM VALVE AND INSULATION

N-7855- 743 -0 366,000 GALLON WHITE WINE FERMENTATION TANK AND WINE STORAGE TANK (TANK 1504) WITH PRESSURE/VACUUM VALVE AND INSULATION

N-7855- 744 -0 366,000 GALLON WHITE WINE FERMENTATION TANK AND WINE STORAGE TANK (TANK 1505) WITH PRESSURE/VACUUM VALVE AND INSULATION

N-7855- 745 -0 366,000 GALLON WHITE WINE FERMENTATION TANK AND WINE STORAGE TANK (TANK 1506) WITH PRESSURE/VACUUM VALVE AND INSULATION

N-7855- 746 -0 366,000 GALLON WHITE WINE FERMENTATION TANK AND WINE STORAGE TANK (TANK 1507) WITH PRESSURE/VACUUM VALVE AND INSULATION

N-7855- 747 -0 20,219 GALLON WHITE WINE FERMENTATION TANK AND WINE STORAGE TANK (TANK 2100) WITH PRESSURE/VACUUM VALVE AND INSULATION

N-7855- 748 -0 20,219 GALLON WHITE WINE FERMENTATION TANK AND WINE STORAGE TANK (TANK 2101) WITH PRESSURE/VACUUM VALVE AND INSULATION

N-7855- 749 -0 20,219 GALLON WHITE WINE FERMENTATION TANK AND WINE STORAGE TANK (TANK 2102) WITH PRESSURE/VACUUM VALVE AND INSULATION

N-7855- 750 -0 20,219 GALLON WHITE WINE FERMENTATION TANK AND WINE STORAGE TANK (TANK 2103) WITH PRESSURE/VACUUM VALVE AND INSULATION

N-7855- 751 -0 20,219 GALLON WHITE WINE FERMENTATION TANK AND WINE STORAGE TANK (TANK 2104) WITH PRESSURE/VACUUM VALVE AND INSULATION

N-7855- 752 -0 13,487 GALLON WHITE WINE FERMENTATION TANK AND WINE STORAGE TANK (TANK 2105) WITH PRESSURE/VACUUM VALVE AND INSULATION

N-7855- 753 -0 13,487 GALLON WHITE WINE FERMENTATION TANK AND WINE STORAGE TANK (TANK 2106) WITH PRESSURE/VACUUM VALVE AND INSULATION

N-7855- 754 -0 13,487 GALLON WHITE WINE FERMENTATION TANK AND WINE STORAGE TANK (TANK 2107) WITH PRESSURE/VACUUM VALVE AND INSULATION

N-7855- 755 -0 13,487 GALLON WHITE WINE FERMENTATION TANK AND WINE STORAGE TANK (TANK 2108) WITH PRESSURE/VACUUM VALVE AND INSULATION

N-7855- 756 -0 13,487 GALLON WHITE WINE FERMENTATION TANK AND WINE STORAGE TANK (TANK 2109) WITH PRESSURE/VACUUM VALVE AND INSULATION

N-7855- 757 -0 8,031 GALLON WHITE WINE FERMENTATION TANK AND WINE STORAGE TANK (TANK 2110) WITH PRESSURE/VACUUM VALVE AND INSULATION

N-7855- 758 -0 8,031 GALLON WHITE WINE FERMENTATION TANK AND WINE STORAGE TANK (TANK 2111) WITH PRESSURE/VACUUM VALVE AND INSULATION

N-7855- 759 -0 8,031 GALLON WHITE WINE FERMENTATION TANK AND WINE STORAGE TANK (TANK 2112) WITH PRESSURE/VACUUM VALVE AND INSULATION

N-7855- 760 -0 8,031 GALLON WHITE WINE FERMENTATION TANK AND WINE STORAGE TANK (TANK 2113) WITH PRESSURE/VACUUM VALVE AND INSULATION

N-7855- 761 -0 8,031 GALLON WHITE WINE FERMENTATION TANK AND WINE STORAGE TANK (TANK 2114) WITH PRESSURE/VACUUM VALVE AND INSULATION

N-7855- 762 -0 8,031 GALLON WHITE WINE FERMENTATION TANK AND WINE STORAGE TANK (TANK 2115) WITH PRESSURE/VACUUM VALVE AND INSULATION

N-7855- 763 -0 8,031 GALLON WHITE WINE FERMENTATION TANK AND WINE STORAGE TANK (TANK 2116) WITH PRESSURE/VACUUM VALVE AND INSULATION

N-7855- 764 -0 8,031 GALLON WHITE WINE FERMENTATION TANK AND WINE STORAGE TANK (TANK 2117) WITH PRESSURE/VACUUM VALVE AND INSULATION

N-7855- 765 -0 8,031GALLON WHITE WINE FERMENTATION TANK AND WINE STORAGE TANK (TANK 2118) WITH PRESSURE/VACUUM VALVE AND INSULATION

N-7855- 766 -0 8,031 GALLON WHITE WINE FERMENTATION TANK AND WINE STORAGE TANK (TANK 2119) WITH PRESSURE/VACUUM VALVE AND INSULATION

N-7855- 767 -0 13,487 GALLON WHITE WINE FERMENTATION TANK AND WINE STORAGE TANK (TANK 2120) WITH PRESSURE/VACUUM VALVE AND INSULATION

N-7855- 768 -0 13,487 GALLON WHITE WINE FERMENTATION TANK AND WINE STORAGE TANK (TANK 2121) WITH PRESSURE/VACUUM VALVE AND INSULATION

N-7855- 769 -0 13,487 GALLON WHITE WINE FERMENTATION TANK AND WINE STORAGE TANK (TANK 2122) WITH PRESSURE/VACUUM VALVE AND INSULATION

N-7855- 770 -0 13,487 GALLON WHITE WINE FERMENTATION TANK AND WINE STORAGE TANK (TANK 2123) WITH PRESSURE/VACUUM VALVE AND INSULATION

N-7855- 771 -0 13,487 GALLON WHITE WINE FERMENTATION TANK AND WINE STORAGE TANK (TANK 2124) WITH PRESSURE/VACUUM VALVE AND INSULATION

N-7855- 772 -0 20,219 GALLON WHITE WINE FERMENTATION TANK AND WINE STORAGE TANK (TANK 2125) WITH PRESSURE/VACUUM VALVE AND INSULATION

N-7855- 773 -0 20,219 GALLON WHITE WINE FERMENTATION TANK AND WINE STORAGE TANK (TANK 2126) WITH PRESSURE/VACUUM VALVE AND INSULATION

N-7855- 774 -0 20,219 GALLON WHITE WINE FERMENTATION TANK AND WINE STORAGE TANK (TANK 2127) WITH PRESSURE/VACUUM VALVE AND INSULATION

N-7855- 775 -0 20,219 GALLON WHITE WINE FERMENTATION TANK AND WINE STORAGE TANK (TANK 2128) WITH PRESSURE/VACUUM VALVE AND INSULATION

N-7855- 776 -0 20,219 GALLON WHITE WINE FERMENTATION TANK AND WINE STORAGE TANK (TANK 2129) WITH PRESSURE/VACUUM VALVE AND INSULATION

Appendix B
Daily PE2 for Storage Tank Emissions Units

Daily Post-Project Potential to Emit for Storage Tank Emissions Units N-7855-701-0 through '-776-0				
Basis:				
1. All tanks are insulated, therefore emissions are from working losses only.				
2. All tanks are limited to 23.9% ethanol.				
3. All tanks are llimited to a daily throughput equal to their rated volume capacity.				
3. Per FYI-114, emission factor is 0.528 lb-VOC/1000 gallons of daily throughput (interpolated).				
Permit Number			Maximum Daily Throughput Per Permit (gallons)	Daily Storage Emissions (lb-VOC/day)
N-7855-	701	-0	1,013,190	535.0
N-7855-	702	-0	1,013,190	535.0
N-7855-	703	-0	1,013,190	535.0
N-7855-	704	-0	1,013,190	535.0
N-7855-	705	-0	1,013,190	535.0
N-7855-	706	-0	1,013,190	535.0
N-7855-	707	-0	1,013,190	535.0
N-7855-	708	-0	1,013,190	535.0
N-7855-	709	-0	1,013,190	535.0
N-7855-	710	-0	1,013,190	535.0
N-7855-	711	-0	1,013,190	535.0
N-7855-	712	-0	1,013,190	535.0
N-7855-	713	-0	1,013,190	535.0
N-7855-	714	-0	1,013,190	535.0
N-7855-	715	-0	1,013,190	535.0
N-7855-	716	-0	1,013,190	535.0
N-7855-	717	-0	1,013,190	535.0
N-7855-	718	-0	1,013,190	535.0
N-7855-	719	-0	1,013,190	535.0
N-7855-	720	-0	1,010,000	533.3
N-7855-	721	-0	1,010,000	533.3
N-7855-	722	-0	1,010,000	533.3
N-7855-	723	-0	1,010,000	533.3
N-7855-	724	-0	1,010,000	533.3

N-7855-	725	-0	1,010,000	533.3
N-7855-	726	-0	1,010,000	533.3
N-7855-	727	-0	1,010,000	533.3
N-7855-	728	-0	1,010,000	533.3
N-7855-	729	-0	1,010,000	533.3
N-7855-	730	-0	1,010,000	533.3
N-7855-	731	-0	1,010,000	533.3
N-7855-	732	-0	1,010,000	533.3
N-7855-	733	-0	1,010,000	533.3
N-7855-	734	-0	1,010,000	533.3
N-7855-	735	-0	1,010,000	533.3
N-7855-	736	-0	1,010,000	533.3
N-7855-	737	-0	1,010,000	533.3
N-7855-	738	-0	1,010,000	533.3
N-7855-	739	-0	1,830,000	966.2
N-7855-	740	-0	1,830,000	966.2
N-7855-	741	-0	1,830,000	966.2
N-7855-	742	-0	1,830,000	966.2
N-7855-	743	-0	1,830,000	966.2
N-7855-	744	-0	1,830,000	966.2
N-7855-	745	-0	1,830,000	966.2
N-7855-	746	-0	1,830,000	966.2
N-7855-	747	-0	101,095	53.4
N-7855-	748	-0	101,095	53.4
N-7855-	749	-0	101,095	53.4
N-7855-	750	-0	101,095	53.4
N-7855-	751	-0	101,095	53.4
N-7855-	752	-0	67,435	35.6
N-7855-	753	-0	67,435	35.6
N-7855-	754	-0	67,435	35.6
N-7855-	755	-0	67,435	35.6
N-7855-	756	-0	67,435	35.6
N-7855-	757	-0	40,155	21.2
N-7855-	758	-0	40,155	21.2

N-7855-	759	-0	40,155	21.2
N-7855-	760	-0	40,155	21.2
N-7855-	761	-0	40,155	21.2
N-7855-	762	-0	40,155	21.2
N-7855-	763	-0	40,155	21.2
N-7855-	764	-0	40,155	21.2
N-7855-	765	-0	40,155	21.2
N-7855-	766	-0	40,155	21.2
N-7855-	767	-0	67,435	35.6
N-7855-	768	-0	67,435	35.6
N-7855-	769	-0	67,435	35.6
N-7855-	770	-0	67,435	35.6
N-7855-	771	-0	67,435	35.6
N-7855-	772	-0	101,095	53.4
N-7855-	773	-0	101,095	53.4
N-7855-	774	-0	101,095	53.4
N-7855-	775	-0	101,095	53.4
N-7855-	776	-0	101,095	53.4

Appendix C
Daily PE2 for Fermentation Tank Emissions Units

Daily Post-Project Potential to Emit for All Fermentation Emissions Units N-7855, 1110296			
Basis: Daily emission Factor is 3.46 lb-VOC/1000 gal for red wine fermentation per District FYI-114			
Permit Number	Capacity (gallons)	Emission Factor lb-VOC/1000 gal	Daily Fermentation Emissions (lb-VOC/day)
N-7855- 701 -0	202,638	3.46	701.1
N-7855- 702 -0	202,638	3.46	701.1
N-7855- 703 -0	202,638	3.46	701.1
N-7855- 704 -0	202,638	3.46	701.1
N-7855- 705 -0	202,638	3.46	701.1
N-7855- 706 -0	202,638	3.46	701.1
N-7855- 707 -0	202,638	3.46	701.1
N-7855- 708 -0	202,638	3.46	701.1
N-7855- 709 -0	202,638	3.46	701.1
N-7855- 710 -0	202,638	3.46	701.1
N-7855- 711 -0	202,638	3.46	701.1
N-7855- 712 -0	202,638	3.46	701.1
N-7855- 713 -0	202,638	3.46	701.1
N-7855- 714 -0	202,638	3.46	701.1
N-7855- 715 -0	202,638	3.46	701.1
N-7855- 716 -0	202,638	3.46	701.1
N-7855- 717 -0	202,638	3.46	701.1
N-7855- 718 -0	202,638	3.46	701.1
N-7855- 719 -0	202,638	3.46	701.1
N-7855- 720 -0	202,000	3.46	698.9
N-7855- 721 -0	202,000	3.46	698.9
N-7855- 722 -0	202,000	3.46	698.9
N-7855- 723 -0	202,000	3.46	698.9
N-7855- 724 -0	202,000	3.46	698.9
N-7855- 725 -0	202,000	3.46	698.9
N-7855- 726 -0	202,000	3.46	698.9
N-7855- 727 -0	202,000	3.46	698.9
N-7855- 728 -0	202,000	3.46	698.9
N-7855- 729 -0	202,000	3.46	698.9
N-7855- 730 -0	202,000	3.46	698.9
N-7855- 731 -0	202,000	3.46	698.9
N-7855- 732 -0	202,000	3.46	698.9

N-7855- 733 -0	202,000	3.46	698.9
N-7855- 734 -0	202,000	3.46	698.9
N-7855- 735 -0	202,000	3.46	698.9
N-7855- 736 -0	202,000	3.46	698.9
N-7855- 737 -0	202,000	3.46	698.9
N-7855- 738 -0	202,000	3.46	698.9
N-7855- 739 -0	366,000	3.46	1266.4
N-7855- 740 -0	366,000	3.46	1266.4
N-7855- 741 -0	366,000	3.46	1266.4
N-7855- 742 -0	366,000	3.46	1266.4
N-7855- 743 -0	366,000	3.46	1266.4
N-7855- 744 -0	366,000	3.46	1266.4
N-7855- 745 -0	366,000	3.46	1266.4
N-7855- 746 -0	366,000	3.46	1266.4
N-7855- 747 -0	20,219	3.46	70.0
N-7855- 748 -0	20,219	3.46	70.0
N-7855- 749 -0	20,219	3.46	70.0
N-7855- 750 -0	20,219	3.46	70.0
N-7855- 751 -0	20,219	3.46	70.0
N-7855- 752 -0	13,487	3.46	46.7
N-7855- 753 -0	13,487	3.46	46.7
N-7855- 754 -0	13,487	3.46	46.7
N-7855- 755 -0	13,487	3.46	46.7
N-7855- 756 -0	13,487	3.46	46.7
N-7855- 757 -0	8,031	3.46	27.8
N-7855- 758 -0	8,031	3.46	27.8
N-7855- 759 -0	8,031	3.46	27.8
N-7855- 760 -0	8,031	3.46	27.8
N-7855- 761 -0	8,031	3.46	27.8
N-7855- 762 -0	8,031	3.46	27.8
N-7855- 763 -0	8,031	3.46	27.8
N-7855- 764 -0	8,031	3.46	27.8
N-7855- 765 -0	8,031	3.46	27.8
N-7855- 766 -0	8,031	3.46	27.8
N-7855- 767 -0	13,487	3.46	46.7
N-7855- 768 -0	13,487	3.46	46.7
N-7855- 769 -0	13,487	3.46	46.7
N-7855- 770 -0	13,487	3.46	46.7
N-7855- 771 -0	13,487	3.46	46.7
N-7855- 772 -0	20,219	3.46	70.0
N-7855- 773 -0	20,219	3.46	70.0
N-7855- 774 -0	20,219	3.46	70.0
N-7855- 775 -0	20,219	3.46	70.0

N-7855- 776 -0	20,219	3.46	70.0

Appendix D

District FYI-114, *Estimating VOC Emissions from Wine Storage Tanks*

SAN JOAQUIN VALLEY UNIFIED
AIR POLLUTION CONTROL DISTRICT

DATE: March 8, 2007 (Revised 09/14/09)

TO: Permit Services Staff

FROM: Dennis Roberts

SUBJECT: VOC Emission Factors for Wine Fermentation and Storage Tanks

---

Emission factors have been developed to estimate ethanol emissions from wine storage and fermentation tanks.

Wine Storage Tanks

Table 1 provides both daily and annual emission factors for wine storage tanks storing wine with up to 20 volume % ethanol and for tank sizes ranging from 250 gallons up to 605,000 gallons nominal capacity. Emission factors for tanks storing 100 vol% ethanol are also given. The table is based on typical R4694-compliant wine storage tank operation with a pressure vacuum valve located in Fresno (typical for San Joaquin Valley) and provides separate factors for tank breathing losses and for tank working losses. Breathing losses are a function of both the tank size and the ethanol content and are given as lb-VOC/1000 gallons of tank capacity. Daily breathing losses are based on average daily losses for the month of July. Working losses are only a function of ethanol content and tank throughput (independent of tank size). The working losses are applied to the maximum daily and the maximum annual throughput as applicable. Daily working loss emission factors are based on tank throughput during July as a worst-case potential. Appendix A to this FYI provides a detailed summary of the basis, assumptions and methodology employed to develop Table 1.

Wine storage tanks perform two functions in the winery:

- Facilitation of post-fermentation processing operations such as racking, filtration, malolactic fermentation and bottling. In this role, the typical storage tank is filled and emptied several times per year and functions as a process vessel.
- Storage of wine between processing operations up to the final operation of bottling. In this role, the objective is to avoid oxidation of the wine by both minimizing the wine temperature and the exposure of the wine to air.

Emissions from storage tanks consist of both working losses and breathing losses. The former losses occur as a result of the displacement of the vapor space of the tank into the atmosphere as a result of tank filling operations and is primarily a function of tank throughput and the temperature and ethanol content of the wine. Breathing losses are the result of diurnal heating and cooling caused by the effect of atmospheric conditions on the contents of the tank. For a well-insulated tank, breathing losses will be negligible.

Table 1

Wine and Brandy Storage Tank Emission Factors

Breathing Loss Emission Factors

lb per day (or Year) per 1000 gallons nominal tank capacity

Nominal Tank Volume (gallons)	8 vol% Ethanol		10 vol% Ethanol		12 vol% Ethanol		14 vol% Ethanol		16 vol% Ethanol		18 vol% Ethanol		20 vol% Ethanol		100 vol% Ethanol	
	Daily	Annual	Daily	Annual	Daily	Annual	Daily	Annual	Daily	Annual	Daily	Annual	Daily	Annual	Daily	Annual
250	0.00186	0.347	0.00240	0.450	0.00296	0.557	0.00358	0.664	0.00421	0.787	0.00490	0.909	0.00561	1.04	0.02650	4.53
400	0.00186	0.347	0.00240	0.450	0.00296	0.556	0.00357	0.663	0.00421	0.786	0.00489	0.908	0.00561	1.04	0.02640	4.53
1,000	0.00185	0.346	0.00239	0.448	0.00295	0.554	0.00356	0.661	0.00419	0.783	0.00487	0.905	0.00558	1.04	0.02630	4.53
5,000	0.00181	0.340	0.00233	0.436	0.00288	0.539	0.00346	0.647	0.00408	0.762	0.00473	0.882	0.00541	1.01	0.02530	4.53
15,000	0.00178	0.335	0.00229	0.431	0.00283	0.532	0.00340	0.638	0.00401	0.751	0.00464	0.869	0.00531	0.993	0.02460	4.43
25,000	0.00178	0.335	0.00229	0.431	0.00282	0.531	0.00339	0.638	0.00399	0.750	0.00463	0.867	0.00529	0.991	0.02440	4.40
35,000	0.00176	0.332	0.00226	0.426	0.00279	0.526	0.00335	0.631	0.00395	0.742	0.00457	0.858	0.00523	0.980	0.02380	4.34
45,000	0.00175	0.331	0.00225	0.425	0.00278	0.524	0.00334	0.629	0.00393	0.739	0.00455	0.855	0.00471	0.976	0.02290	4.31
105,000	0.00172	0.326	0.00221	0.419	0.00272	0.516	0.00327	0.618	0.00384	0.726	0.00444	0.839	0.00507	0.957	0.02210	4.18
205,000	0.00169	0.321	0.00216	0.412	0.00267	0.507	0.00320	0.607	0.00375	0.712	0.00434	0.822	0.00495	0.938	0.02150	4.05
305,000	0.00166	0.317	0.00213	0.406	0.00262	0.500	0.00314	0.599	0.00369	0.702	0.00426	0.810	0.00486	0.923	0.02110	3.96
405,000	0.00165	0.315	0.00211	0.403	0.00259	0.495	0.00311	0.593	0.00364	0.695	0.00420	0.801	0.00479	0.913	0.02080	3.90
505,000	0.00163	0.313	0.00209	0.400	0.00257	0.492	0.00308	0.588	0.00361	0.689	0.00416	0.795	0.00474	0.905	0.02040	3.85
605,000	0.00162	0.310	0.00207	0.397	0.00254	0.488	0.00304	0.583	0.00357	0.683	0.00365	0.787	0.00468	0.896	0.02000	3.79

Working Loss Emission Factors

lb per day (or year) per 1000 gallons tank throughput

Daily	0.158	0.200	0.244	0.289	0.335	0.383	0.432	1.630
Annual	0.109	0.138	0.170	0.198	0.230	0.263	0.297	1.130

Use of Table I to estimate emissions from a wine storage tank can be demonstrated by examples:

Example 1 (uninsulated tank) – estimate the daily and annual potential to emit for an uninsulated 100,000 gallon nominal capacity steel storage tank to store wine with 14 vol% ethanol . Maximum daily throughput is 100,000 gallons. Maximum annual throughput will be 600,000 gallons per year.

Since the table provides breathing loss emission factors for 105,000 gallons and 45,000 gallons, breathing loss emission factors must be interpolated from the table for 14 % ethanol as follows:

Interpolated breathing loss factors:	Daily	0.00328 (for 100,000 gallon tank)
(lb-VOC/1000 gallons tank capacity)	Annual	0.619 (for 100,000 gallon tank)

The working loss factors are a function of ethanol content only and may be taken directly from the table as follows:

Working loss emission factors:	Daily	0.289
(lb-VOC/1000 gallons tank throughput)	Annual	0.198

Daily PE consists of the sum of the daily working and the daily breathing losses:

Daily $PE_{working}$ = 100,000 gallons/day x 0.289 lb-VOC/1000 gallons = 28.9 lb-VOC/day
Daily $PE_{breathing}$ = 100,000 gallons/day x 0.00328 lb-VOC/1000 gallons = 0.3 lb-VOC/day
Daily PE = Daily $PE_{working}$ + Daily $PE_{breathing}$ = 28.9 + 0.3 = 29.2 lb-VOC/day

Annual PE consists of the sum of the annual working and the annual breathing losses:

Annual $PE_{working}$ = 600,000 gallons/year x 0.198 lb-VOC/1000 gallons = 119 lb-VOC/year
Annual $PE_{breathing}$ = 100,000 gallons/day x 0.619 lb-VOC/1000 gallons = 62 lb-VOC/day
Annual PE = Annual $PE_{working}$ + Annual $PE_{breathing}$ = 119 + 62 = 181 lb-VOC/year

DEL conditions for this example would be:

- *Ethanol content of wine in this tank shall not exceed 13.9 percent by volume. [District Rule 2201]*

- *Tank throughput shall not exceed either of the following limits: 100,000 gallons in any one day or 600,000 gallons per year. [District Rule 2201]*

Example 2 (insulated tank)– same tank and conditions except the tank is insulated.

For insulated tanks, breathing losses can be assumed to be negligible. Therefore,

Daily $PE_{breathing}$ = Annual $PE_{breathing}$ = 0

And,

Daily PE = Daily $PE_{working}$ = 28.9 lb-VOC/day
Annual PE = Annual $PE_{working}$ = 119 lb-VOC/year

DEL conditions will be the same as example 1. However, the equipment description should indicate that the tank is insulated.

Example 3 (insulated tank) - same tank as example 2 except there will be no DEL condition for maximum ethanol %

An ethanol content of 20% is a maximum for wine storage. Therefore, use of the 20% emission factors allows deletion of the DEL condition limiting wine ethanol content. Since the tank is insulated there are no breathing losses. Working loss factors for 20% ethanol are:

Working loss emission factors:	Daily	0.432
(lb-VOC/1000 gallons tank throughput)	Annual	0.297

Daily $PE_{working}$ = 100,000 gallons/day x 0.432 lb-VOC/1000 gallons = 43.2 lb-VOC/day
Annual $PE_{working}$ = 600,000 gallons/year x 0.297 lb-VOC/1000 gallons = 178 lb-VOC/year

Daily PE = Daily $PE_{working}$ = 43.2 lb-VOC/day
Annual PE = Annual $PE_{working}$ = 178 lb-VOC/year

DEL condition for this example would be:

- *Tank throughput shall not exceed either of the following limits: 100,000 gallons in any one day or 600,000 gallons per year. [District Rule 2201]*

The equipment description should indicate that the tank is insulated.

Wine Fermentation Tanks

During the wine fermentation process, sugar in the grape juice reacts with yeast to form alcohol (ethanol) and carbon dioxide (CO_2) gas. Ethanol is emitted into the atmosphere through evaporation. According to Williams and Boulton[1], the only important mechanism for ethanol loss is equilibrium evaporation into the escaping CO_2 stream. The physical entrainment of ethanol droplets in the CO_2 gas is insignificant in modern enclosed fermentation vessels. These researchers' model indicates that as fermentation temperature increases, ethanol loss increases exponentially. Since red wines are fermented at significantly higher temperatures than white wine, a different emission factor is required for each case.

[1] L.A. Williams and R. Boulton, Modeling and Prediction of Evaporative Ethanol Loss During Wine Fermentation, American Journal of Enology and Vitriculture, 32:234-242, (1983).

Annual Fermentation Emission Factors

The California Air Resources Board (CARB) has established annual emission factors for fermentation of both red and white wines, based on the computer model developed by Williams and Boulton. The emission factors were developed for purposes of emission inventory estimation and represent a typical wine fermentation operation based on average fermentation temperatures and average initial sugar concentrations (°Brix) and are presented in Emissions Inventory Procedural Manual, Section 5.1, Air Resources Board, 1997. These factors have been adopted by the District in Rule 4694, *Wine Fermentation and Storage Tanks*. The established factors are as follows:

Red Wine Fermentation:	6.2 lb-VOC/1000 gallons fermented per year (78 °F fermentation temperature, 21.8 °Brix)
White Wine Fermentation:	2.5 lb-VOC/1000 gallons fermented per year (58 °F fermentation temperature, 20.4 °Brix)

Daily Fermentation Emission Factors

The District has developed factors for daily Potential to Emit using the previously-referenced research by Williams and Boulton (see Appendix B). To ensure the factors represent true Potential to Emit, the daily emission factors were developed based on typical maximum fermentation temperatures and starting sugar concentrations rather than average values:

Red Wine Fermentation:	3.46 lb-VOC/1000 gallons tank capacity per day (85 °F fermentation temperature, 22.5 °Brix)
White Wine Fermentation:	1.62 lb-VOC/1000 gallons tank capacity per day (70 °F fermentation temperature, 22.5 °Brix)

Example 4 (fermentation tank) - estimate the daily and annual potential to emit for a 200,000 gallon nominal capacity fermentation tank to exclusively ferment red wine. Maximum fermentation throughput will be 900,000 gallons red wine per year. The tank will not be used for storage.

Daily $PE_{fermentation}$ = 3.46 lb-VOC/day per 1000 gallons nominal tank capacity x 200 Mgal nominal

Daily $PE_{fermentation}$ = 692.1 lb/day

Daily PE = Daily $PE_{fermentation}$ = 692.1 lb/day

Annual PE = 6.2 lb-VOC per 1000 gallons fermented x 900 Mgal/year = 5,580 lb-VOC/yr

Example 5 (fermentation and storage tank) - estimate the daily and annual potential to emit for a 100,000 gallon nominal capacity fermentation tank to ferment red wine. Maximum fermentation throughput will be 450,000 gallons red wine per year. The tank will also be used for storage identical with example 1:

In this case,

Daily PE = the larger of either Daily $PE_{fermentation}$ or Daily $PE_{storage}$

And.

Annual PE = Annual $PE_{fermentation}$ + Annual $PE_{storage}$

Calculating the Daily PE:

Daily $PE_{fermentation}$ = 3.46 lb-VOC/day per 1000 gallons nominal tank capacity x 100 Mgal nominal

Daily $PE_{fermentation}$ = 346.0 lb-VOC/day

From example 2,

Daily $PE_{storage}$ = 28.9 lb-VOC/day

Therefore,

Daily PE = 346.0 lb/day

Calculating the Annual PE:

Annual $PE_{fermentation}$ = 6.2 lb-VOC per 1000 gallons fermented x 450 Mgal/year = 2,790 lb-VOC/yr

From example 2,

Annual $PE_{storage}$ = 119 lb-VOC/year

Therefore,

Annual PE = 2,790 + 119 = 2,909 lb/year

Appendix A

Basis, Assumptions and Methodology Employed to Develop Table 1

Appendix A

VOC's are emitted from wine handling and storage operations as volatilized ethanol. Wine is produced in the San Joaquin Valley by fermentation during the "crush" season, an approximate 12 week period coinciding with the grape harvest (late August to mid-November). Subsequently, the wine is transferred a number of times between storage tanks to perform various polishing operations such as "racking" (decantation for separation of sediment), filtration, malolactic fermentation (breakdown of malic acid to lactic acid and carbon dioxide), and bottling operations. Since the bottling process is a year-round operation, each batch of wine will have a definite residence time in storage, prior to bottling, which includes the time spent in performing the various post-fermentation polishing processes. The post-fermentation polishing operations result in "working losses" from the storage tanks since they require draining and filling the tanks several times. Storage prior to bottling generates "breathing losses" from the tanks.

Since ethanol in water constitutes an organic liquid, the TANKS program can be utilized to determine the estimated VOC (ethanol) emissions. However, obtaining accurate results from the TANKS program requires that the organic liquid be accurately characterized in terms of vapor pressure of the liquid and the composition of the equilibrium vapor phase. Since ethanol and water are highly polar compounds, they form a non-ideal mixture, i.e., the mixture does not follow Raoult's law, and, as a result, direct estimation of vapor pressure and equilibrium vapor phase concentration, based only on pure component vapor pressures, is not practical and experimental data are required.

In order to effectively utilize TANKS to estimate VOC emissions from wine storage, experimental data supplied by the Wine Institute for the vapor pressure of ethanol over wine can be utilized, along with the asumption that water will behave ideally (a good assumption since the liquid phase is over 95% water on a molar basis).

Use of the above approach and the data supplied the Wine Institute to calculate storage tank emissions is demonstrated in the following:

Emission Factor Calculation for Wine Storage Tanks

General Calculation Procedure:

- Characterize wine in terms of molecular weight of liquid and vapor phase and the total vapor pressure over wine.
- Input data, along with tank parameters into Tanks 4.0. Output from Tanks 4.0 is total vapor phase emissions (including water) in lb/year.
- Back calculate ethanol emissions from vapor phase ethanol concentration.

Assumptions:

- The ethanol (EtOH) concentration of wine is 8 to 20 volume %. For demonstration, a concentration of 14 volume % will be assumed.
- A storage tank located in Fresno will be considered to be representative of any San Joaquin Valley location.

Appendix A

- One gallon of ethanol (EtOH) at 60 °F weighs 6.6097 lb (27 CFR 30, Table No. 5, Gauging Manual for the Alcohol and Tobacco Tax and Trade Bureau, U. S. Dept. of the Treasury).
- 100 gallons of 14 vol% wine contains 14 gallons of ethanol and 87.1 gallons of water (27 CFR 30, Table No. 5, Gauging Manual for the Alcohol and Tobacco Tax and Trade Bureau, U. S. Dept. of the Treasury).
- Density of water is 8.34 lb/gal.
- Partial pressure of ethanol over wine is given in the attached table provided by the Wine Institute (Attachment I).
- Water behaves ideally according to Raoult's Law, i.e., partial pressure of water in the vapor phase is the product of the liquid phase water mole fraction and the vapor pressure of pure water at the system temperature.
- The storage tank is equipped with a pressure/vacuum valve.
- The molecular weights of ethanol and water are 46.02 and 18.02 respectively.
- Tank height to diameter ratio is 1.3 (typical).
- Tanks are dome-roof configuration.
- Tanks are equipped with a pressure/vacuum valve.
- Tanks are filled to 98% of the tank height (industry practice to minimize air contact with wine).
- TANKS 4.0 defaults are used for all other data.

Calculations:

1. Calculate molar fractions and average molecular weights for liquid and vapor phases:

   Liquid Phase Molecular Weight (calculation basis 100 gallons of 14 vol% wine)

   Lb-mols EtOH = 100 gal wine x 14 gal EtOH/100 gal wine x 6.61 lb EtOH/gal EtOH x 1mol EtOH/46.02 lb EtOH

   Lb-mols EtOH = 2.01 lb-mols EtOH

   Lb-mols H2O = 100 gal wine x 87.1 gal H2O/100 gal wine x 8.34 lb H2O/gal H2O x 1mol H2O/18.02 lb H2O

   Lb-mols H2O = 40.31 lb-mols H2O

   Total Mols in 100 gal wine = 2.01 + 40.31 = 42.32 mols

   x_a = liquid mol fraction EtOH = 2.01/42.32 = 0.0475

   x_w = liquid mol fraction H2O = 40.31/42.32 = 0.9525

   Average Molecular weight of liquid = (0.0475 x 46.02) + (0.9525 x 18.02) = 19.35

Appendix A

Vapor Phase Molecular Weight and Total Vapor Pressure Over Wine

Total vapor pressure over wine is the sum of the partial pressure of EtOH plus the partial pressure of water:

Total Pressure (P_t) = Partial Pressure EtOH (P_a) + Partial Pressure Water (P_w)

P_a is taken from Attachment I for 14 vol% wine.

Pw = Liquid Mol Fraction Water x Vapor Pressure Pure Water at System Temperature (VP_w)

or,

Pw = 0.959 x VP_w, where VP_w is taken from The Steam Tables, J. Keenan et al.

The mol fraction EtOH in the vapor phase is then calculated as:

$y_a = P_a / P_t$,

and the average molecular weight (AMW) of the vapor phase is then calculated as:

AMW = (y_a x Molecular Weight EtOH) + ((1- y_a) x Molecular Weight Water)

= (y_a x 46.02) + ((1- y_a) x 18.02)

Performing the above calculations for temperatures ranging from 40 to 100 °F yields the following table of results:

Characterization of Vapor Phase Over 14 vol% Wine					
°F	P_a(in wine) psia	P_w psia	P_t(wine) psia	Y_a	AMW
40	0.0548	0.1158	0.1698	0.3228	27.06
50	0.0792	0.1695	0.2474	0.3201	26.98
60	0.1129	0.2441	0.3551	**0.3179**	**26.92**
70	0.1587	0.3459	0.5019	0.3162	26.87
80	0.2203	0.4832	0.6997	0.3149	26.84
90	0.3023	0.6656	0.9626	0.3140	26.81
100	0.4101	0.9052	1.3081	0.3135	26.80

Properties at 65 °F will be used to establish the average molecular weight of the vapor phase since this is near the average annual temperature for Fresno. Interpolating from

above, the vapor phase is characterized by an EtOH mol fraction of **0.3171** and an average molecular weight of **26.90** per the calculations above.

2. Calculate Expected Vapor Emissions Via Tanks 4.0 based on the above characterization:

Input total vapor pressure for 14 vol% wine (from table above), and the average molecular weights for vapor and liquid determined above, into TANKS 4.0 (chemical database). To demonstrate a tank simulation and the manner in which the emission factors of Table 1 were generated, the following tank configuration will be input into TANKS 4.0 for a nominal tank capacity of 25,000 gallons::

Tank Diameter:	14.66 feet
Tank Height:	19.79 feet
Tank Fill Height:	19.39 feet (normal and maximum)
Working Capacity:	24,481 gallons
Tank Throughput:	24,481 gallons (1 turnover)

Simulating this tank with 14 vol% ethanol by distributing the annual throughput evenly over all 12 months and selecting a detailed annual report, the simulation results indicate the following:

Annual Working Losses:	8.96 lb-vapor
Annual Breathing Losses:	28.78 lb-vapor
Monthly Working Loss for July	1.0860 lb-vapor
Monthly Breathing Loss for July	4.7477 lb-vapor

3. Back-calculate the EtOH emissions and the Emission Factors:

The ethanol content of the vapors are calculated based on the average molecular weight of the vapors and the mole fraction of ethanol in the vapor as follows:

EtOH % in Vapor = 1 lb-vapor x 1 mol-vapor/26.90 lb-vapor x 0.3171 mol-EtOH/mol-vapor x 46.02 lb-EtOH/mol-EtOH
EtOH % in Vapor = 54.25% by weight

Annual working losses are strictly a function of the tank throughput and the ethanol content of the stored material. The annual ethanol working losses and emission factors can be calculated as:

Annual Working Losses = 8.96 x 54.25% = 4.86 lb-EtOH/yr
Annual Working Loss Emission Factor @ 14% EtOH = working loss/tank throughput
Annual Working Loss Emission Factor @ 14% EtOH = 4.86/24,481 = 0.198 lb-EtOH/1000 gal throughput

Annual breathing losses are a function of both the tank size and the ethanol content of the stored material. The annual ethanol breathing losses and emission factors can be calculated as:

Appendix A

Annual Breathing Losses = 28.78 x 54.25% =15.61 lb-EtOH/yr
Annual Breathing Loss Emission Factor @ 14% EtOH = breathing loss/tank working capacity
Annual Working Loss Emission Factor @ 14% EtOH = 15.61/24,481 = 0.638 lb-EtOH/ 1000 gal capacity

Daily working losses are proportional to the daily tank throughput at a given ethanol percentage. Since the TANK 4.0 output is for the entire month of July (month of highest emissions) based on evenly distributing the annual throughput in each month of the year, tank throughput for July is 24,481 gallons/12 = 2,040 gallons.

Monthly Working Loss for July = 1.0860 lb-vapor x 54.25% = 0.589 lb-EtOH

The average monthly working loss emission factor for July is assumed to be the maximum daily emission factor. Therefore:

Daily Working Loss Emission Factor @ 14% EtOH = working loss/tank throughput
Daily Working Loss Emission Factor @ 14% EtOH = 0.589/2,040 gal = 0.2888 lb-EtOH/ 1000 gal throughput

Daily breathing losses are equal to the monthly loss for July divided by 31. Therefore,

Daily Breathing Loss = 4.7477 lb-vapor x 54.25% EtOH/31 = 0.0831 lb-EtOH
Daily Breathing Loss Emission Factor @ 14% EtOH = breathing loss/tank capacity
Daily Breathing Loss Emission Factor @ 14% EtOH = 0.831/24,481 gal = 0.0339 lb-EtOH/ 1000 gal capacity

Appendix B

Daily Emission Factor for Wine Fermentation

Appendix B

The emission factor for daily PE is based on the following:

- Estimation of maximum daily fermentation emissions is based on Figure 7 from the Williams and Boulton work referenced in the body of this document.
- Maximum red wine fermentation temperature is assumed to be 85 °F.
- Maximum white wine fermentation temperature is assumed to be 70 °F.
- Maximum working capacity of a red wine fermenter is 80% of tank maximum capacity.
- Maximum working capacity of a white wine fermenter is 95% of tank maximum capacity.

Figure 7 from Williams and Boulton indicates the ethanol emission rate (mg per hour per liter of wine) versus time for various fermentation temperatures. The total emissions in mg per liter of wine for any time period is the area under the curve. Thus, for any given temperature, figure 7 can be graphically integrated over the 24 hour period during which maximum emissions occur. A copy of figure 7 is attached which indicates the integration interval for red wine (85 °F) and for white wine (70 °F). Results of integration of Figure 7 are presented in the following table:

Graphical Integration Results to Determine Daily Fermentation Emission Factor from Figure 7 of Williams and Boulton

	Red Wine	White Wine
Maximum 24 hour Emissions (mg/liter of wine per day)	518.6	203.9
Maximum 24 hour Emissions (1b/1000 gallons of wine per day)	4.33	1.70
Maximum Batch Size (% of Tank Capacity)	80%	95%
Daily Emission Factor (lb/1000 gallons tank capacity per day)	3.46	1.62

Appendix B

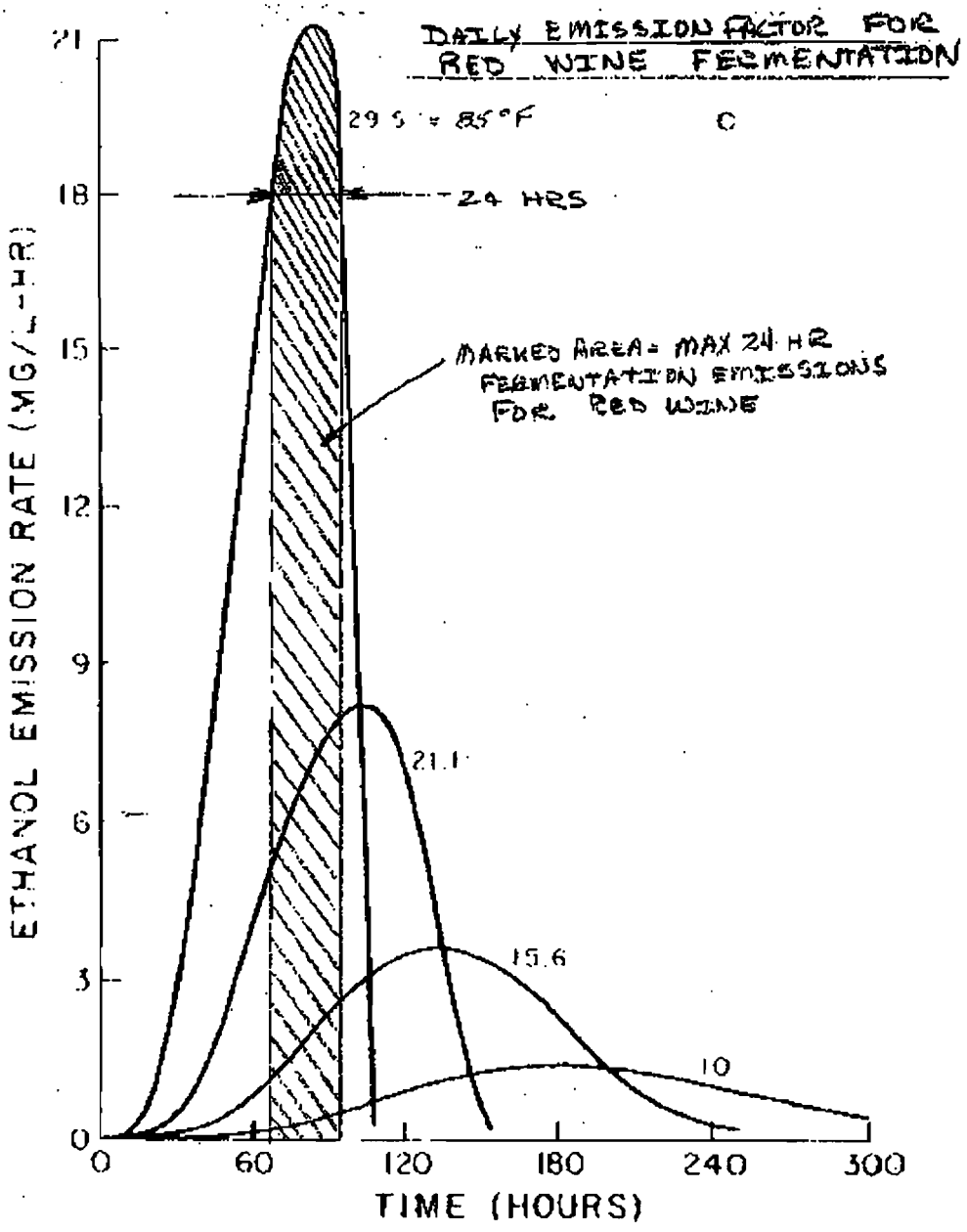

Fig. 7. The influence of fermentation temperature on a) the fermentation rate, b) the vapor phase ethanol concentration, and c) the rate of ethanol emission. (Initial sugar content of 22.5°Brix, isothermal fermentation at indicated temperature.)

Appendix B

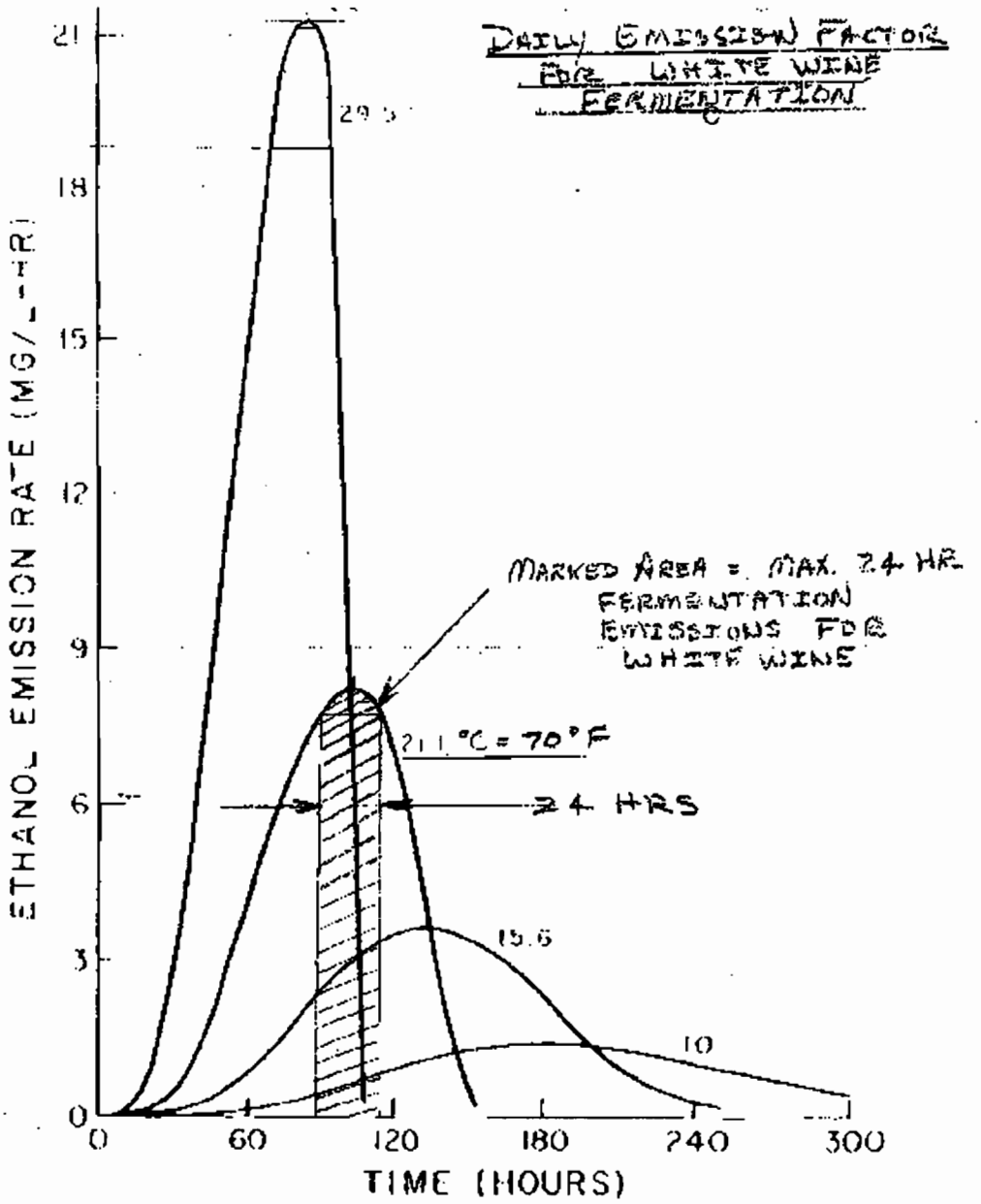

Fig. 7. The influence of fermentation temperature on a) the fermentation rate, b) the vapor phase ethanol concentration, and c) the rate of ethanol emission. (Initial sugar content of 22.5°Brix, isothermal fermentation at indicated temperature.)

Appendix E

Draft District Policy: *Calculation of the Potential to Emit for VOC Emissions from Wine Fermentation and Storage Operations*

DRAFT

TO: Permit Services Division Staff

FROM: Dennis Roberts

DATE: June 30, 2009

SUBJECT: Calculation of the Potential to Emit for VOC Emissions from Wine Fermentation and Storage Operations

Purpose

The purpose of this policy is to establish a framework for calculating the collective Potential to Emit for VOCs from wine fermentation and storage tanks which have been previously permitted by in-house Permits to Operate based on loss-of-exemption. Such calculation is primarily performed for purposes of establishing the collective Pre-Project Potential to Emit (PE1) to form the basis for a Specific Limiting Condition (SLC) on all wine tanks at a facility which limits PE2 = PE1.

Applicability

This policy applies to all wine fermentation and storage operations.

Background

The District began issuing permits for wine fermentation and storage tanks on August 21, 2005. In-house PTO's were issued for existing tanks based on a loss or exemption and therefore the tank permits were not subject to New Source Review. Currently, majority of all wine tank permits in the San Joaquin Valley are still in-house PTO's and thus do not contain emission limits such as they would have if subjected to New Source Review (NSR).

Due to changing consumer tastes, the wine industry in the San Joaquin Valley is changing from the production of wines typically made in large tanks to the production of wine in smaller tanks, using smaller batches of select grapes and smaller fermentation batch sizes, with the objective of producing higher quality wines. To produce the same volume of wine in this manner requires more tanks and smaller tanks. Permitting of additional new, smaller wine fermentation and storage tanks could require the purchase of emissions offsets, even in those cases when a winery is just changing to smaller lot production and overall production is not increasing. Where all tanks meet the requirements for Best Available Control Technology (BACT), a potential permitting approach for adding tanks to a facility, for purposes of product flexibility and without triggering offsets, is to establish an SLC on all the tanks which limits the collective annual PE2 to the calculated collective PE1 for all the existing tanks. Since all units meet BACT, Baseline Emissions (BE) are equal to PE1 and calculated offsets are thus zero pursuant to Rule 2201.

The tanks at a winery are highly interdependent in operation and in the absence of a pre-established permit limit they cannot be considered as independent emissions units. By their nature, the various tank operations which convert crushed grapes into finished wine (fermentation, pressing, racking, filtration, etc.) cannot be all conducted in a single tank. In addition, other associated equipment such as that required for

crushing and pressing may serve to limit wine production by the facility. Therefore, a calculation of the PE for wine tanks requires that the tanks be considered in terms of a collective wine production capacity and that other production bottlenecks such as crushing and pressing limitations also be considered. This policy provides a theoretical basis and methodology for performing such a calculation.

Wine Production Process Description

- The VOC emissions associated with winemaking are produced from two separate operations:

  1. Wine Fermentation (a chemical reaction process which converts sugar into ethanol)
  2. Storage Tank Operations during which post-fermentation operations such as racking, cold stabilization, filtration, etc., are also conducted.

  Typically, all tanks in a winery are used for both purposes; thus a wine tank commonly consists of two separate emissions units.

- A general process description for wine production is given in U.S. EPA AP-42 Section 9.12.2. There are many variations to the basic process that reflect the individuality of the winemaking and which may be considered proprietary at most facilities. Some additions to the AP-42 description: White wines are fermented without the grape solids, which minimizes the amount of solids settling out in the fermentation tank, allowing white wine to potentially be fermented in any wine tank.

- Red wine is generally fermented with the grape solids which give the red color and other distinctive characteristics to the wine. Because of the solids settling out with red wine fermentation, specialized red wine fermentation tanks with sloped bottoms or constructed as a horizontal rotating drums are generally used to ease solids removal during tank cleaning.

- The tanks in a winery are highly interdependent in operation and therefore must be considered in terms of the collective production capacity. The fermentation capacity of a facility is not only a function of the capacity of the tanks actually performing fermentation but is also a function of the downstream storage tank capacity which may serve to bottleneck the upstream fermentation operation. The wine production process flow diagram in U.S. EPA AP-42 Figure 9.12.2.-1 is illustrative. Post fermentation operations such as cold stabilization, filtration, malolactic fermentation, etc., have historically required a post fermentation residence time in storage tanks of 40 days or less.

- The facility's grape crushing/destemming and pressing equipment may serve to bottleneck the overall operation, establishing the PE by limiting daily throughput of the facility or of individual fermentation tanks.

- Wine production in the San Joaquin Valley is a seasonal event, coinciding with the grape harvest season ("crush season"). Wine production typically occurs in the months of August through December. Fermentation is at its peak during

September through October; about 74% of wine fermentation occurs within those months in the San Joaquin Valley.

Basis and Assumptions for PE Calculation

- Since the annual emissions from a winery operation are proportional to the annual wine production, the basic approach for calculating the PE for a winery operation is to determine the limiting factor for wine production at the facility and base the calculation on this factor. The following items are considered in determination of the actual "bottleneck" to wine production at a facility:

  Grape Crushing/Destemming Capacity: Daily production is limited by the facility's capacity to receive and crush grapes. This capacity is established by the manufacturer's rated crushing capacity in tons per hour for the crushing equipment actually located at the facility.

  Wine Pressing Capacity: Following crushing, the grape skins must be separated from the wine in the presses. For white wines, this occurs immediately after crushing. For red wines, pressing is performed after the fermentation step. This capacity is established by the manufacturer's rated pressing capacity in tons per hour for the pressing equipment actually located at the facility.

  Winery Tank Capacity: Due to the highly inter-related operation of winery tanks, the collective production capacity of winery tankage, in terms of a required collective "minimum residence time" for wine processing, is the basis for the calculation rather than a consideration of the sum of individual theoretical production capacities for each tank. The capacity of the available tankage to produce both red and white wines is considered separately and the scenario which produces the highest potential emissions is considered to be the facility's basis for calculating the PE based on storage tanks limitations.

- The crushing of one ton of grapes is assumed to produce 200 gallons of produced wine based on data provided by The Wine Institute.

- Batch fermentation processing is assumed to require a 5 day turnaround for a red wine fermentation tank and a 10 day turnaround for white wine, i.e., a red wine fermenter can produce a batch every 5 days while a white wine fermenter can produce a batch every 10 days. These durations were previously established as a result of information provided by the Wine Institute during development of District Rule 4694 – *Wine Fermentation and Storage Tanks.*

- Post-fermentation processing is assumed to require a maximum of 40 days of retention time based on estimates by The Wine Institute (this duration may be less at some facilities depending upon the products and operating philosophy). This retention time accounts for the tank residence time required for post-fermentation processing such as malolactic fermentation, bentonite addition, filtration(s), blending(s), tartrate stabilization, bottling/packaging or bulk shipping.

- Maximum batch size in a red wine fermenter is 80% of nominal tank capacity due to potential expansion of the fermentation mass during operation as a result of rapid evolution of CO2 from the fermentation reaction. White wine fermentation batches are assumed to be 95% of the tank's nominal capacity to allow for a minimum tank freeboard space of two feet during the operation.
- Emission factors for wine fermentation are taken from District Rule 4694 as follows:

  6.2 lb-VOC/1000 gallons produced red wine
  2.5 lb-VOC/1000 gallons produced white wine

- Emissions from post-fermentation storage tank operations will be calculated based on 8 inter-tank transfers during post-fermentation operations. The number of inter-tank transfers is at least 8 for wine fermented on-site per information provided by the Wine Institute. Each batch of wine is moved for the following processing operations at a minimum : 1) from fermentation to storage; 2) coarse filtration, 3) special processing (ex: ion exchange, centrifugation, addition of fining agents), 4) initial blending, 5) fine filtration, 6) final blending, 7) tartrate stabilization, 8) packaging or bulk shipping. (NOTE: The processing may not occur in this order for all wineries).
- Maximum average ethanol content for wine handled in the storage tank operations is 16 volume % (based on Wine Institute estimate for a typical winery).
- The emission factor for wine storage operations is taken from District FYI-114, *Estimating VOC Emissions from Wine Storage Tanks.* Since all tanks are assumed to meet BACT for wine storage, it will be assumed that breathing losses from the storage tanks are negligible since, pursuant to the current District BACT guideline, the tanks must be insulated or have equivalent isolation from significant diurnal impacts. Based on this assumption, the emission factor from FYI-114 is 0.23 lb-VOC/1000 gallons of tank throughput.
- Fermentation is assumed to occur only during the crush season. Based on documentation provided by the Wine institute, the duration of both the red and white wine crush seasons in the San Joaquin Valley is potentially 120 days each.
- Generally, in the absence of other restrictions, all tanks at a facility may be used for white wine fermentation. However, in some wineries, some tanks may have been added to the facility as storage-only tanks through an NSR permitting action subsequent to the initial in-house PTO's. These would not be available for white wine fermentation and their volume must be subtracted from the total tankage capacity to determine the actual white fermenter capacity. White wine production capacity is then calculated by the following general method:

  Given total white fermenter capacity V_w and the 10-day batch turnaround for white fermenters as stated above, the daily white fermenter capacity limit W_{w1} (gallons per day) during crush season is:

  $W_{w1} = V_w \div 10$

To determine the potential limitation due to storage tank capacity, the limiting daily white wine production capacity for a collection of fermentation & storage tanks with a total "effective" capacity V_t gallons may be calculated by considering a total wine residence time = 10 days fermentation + 40 days post-fermentation processing = 50 days total retention time (grape to finished wine). Where the facility does not include storage-only tanks with an NSR throughput limitation as mentioned above, the "effective" total tank capacity is equal to the total capacity of all tanks at the facility. Where the facility has NSR limited storage tanks, an effective total volume is calculated as outlined in Appendix A. The total tank production capacity for white wine W_{w2} (gallons per day) during crush season is then calculated as,

$W_{w2} = V_t \div 50$

The actual facility limit for white wine production W_W is then taken as the least of either the white fermenter capacity limit W_{w1} or the total tank capacity for white wine production W_{w2}

- Since the fermentation of red wine requires specialized fermenters, the consideration of the capacity of the winery tankage to produce red wine must consider the fermentation capacity of these specialized red fermenters separately from the total processing capacity of the tanks. The smallest of either the red fermenter capacity or the total red wine processing capacity of the tanks is taken to be the red wine production limit for the facility:

  Given total red fermenter capacity V_r and the 5-day batch turnaround for red fermenters as stated above, the daily red fermenter capacity limit W_{r1} (gallons per day) during crush season is:

  $W_{r1} = V_r \div 5$

  To determine the potential limitation due to storage tank capacity, the limiting daily red wine production capacity for a collection of fermentation & storage tanks with a total "effective" capacity V_t gallons may be calculated by considering a total wine residence time = 5 days fermentation + 40 days post-fermentation processing = 45 days total retention time (grape to finished wine). Note that the total tank volume is an "effective" volume as described above for white wine. The total tank production capacity for red wine W_{r2} (gallons per day) during crush season is then calculated as,

  $W_{r2} = V_t \div 45$

  The actual maximum daily capacity for red wine production W_r is then taken as the least of either the red fermenter capacity limit W_{r1} or the total tank capacity for red wine production W_{r2}

Calculation Model Sequence:

The Potentials to Emit for both a facility's wine fermentation operations and for the facility's storage tank operations are determined in the following sequence:

1. Potential fermentation emissions from a 100% white wine production scenario are first determined:

White wine production capacity is determined as the lesser of the production capacities of either the crushing, pressing or tankage.

W_W = White wine production capacity (gallons per year as measured immediately after pressing) and is the lesser of the following four calculations:

W1 = C x D_w x M (limited by crusher capacity)

W2 = P x D_w x M (limited by pressing capacity)

W3 = (V_{FW} x F_W x D_w) / W_{FW} (limited by white fermenter volume)

W4 = (V_T x D_w) / R_{TW} (limited by overall tank processing)

C = grape crushing capacity, tons/day
D_w = days in a white wine crush season = 120 days
F_W = Fill factor for white wine fermentation = 95%
M = gallons of grape juice produced per ton of grapes = 200 gallons/ton
P = pressing capacity, tons per day
W_{FW} = White fermentation period = 10 days
R_{TW} = Total winery retention time for white wine, 40 + 10 = 50 days
V_{FW} = total volume of white wine fermenters
V_T = Effective Total Winery Cooperage (gal) for white wine – see Appendix A

Potential white wine fermentation emissions are then determined by applying the white fermentation emission factor to the production capacity determined above:

$PE_{whitefermentation} = E_{fw} \times W_W$

where,

E_{fw} = white wine emission factor = 2.5 lb-VOC/1000 gal (District Rule 4694)

2. Potential fermentation emissions from a 100% red wine production scenario are then determined:

Red wine production capacity is determined as the lesser of the production capacities of either the crushing, pressing or tankage.

W_R = Red wine production capacity (gallons per year as measured immediately after pressing) and is the lesser of the following four calculations:

W1 = C x D_r x M (limited by crusher capacity)

W2 = P x D_r x M (limited by pressing capacity)

W3 = (V_{FR} x F_R x D_r) / R_{FR} (limited by red fermenter volume)

W4 = (V_T x D_r) / R_{TS} (limited by overall tank processing)

C = grape crushing capacity, tons/day
D_r = days in a red wine crush season = 100 days
F_R = Fill factor for red wine fermentation = 80%
M = gallons of grape juice produced per ton of grapes = 200 gallons/ton

P = pressing capacity, tons per day
R_{FR} = Red fermentation period = 5 days
R_{TS} = Total winery retention time for red wine, 40 + 5 = 45 days
V_{FR} = total volume of red wine fermenters
V_T = Effective Total Winery Cooperage (gal) for red wine – see Appendix A

Potential red wine fermentation emissions are then determined by applying the red fermentation emission factor to the production capacity determined above:

$PE_{redfermentation} = E_{fr} \times W_R$

where,
E_{fr} = red wine emission factor = 6.2 lb-VOC/1000 gal (District Rule 4694)

3. The facility's PE for fermentation operations is then taken to be the greater of either the white or red PE's determined above.

   $PE_{fermentation}$ = greater of $PE_{whitefermentation}$ and $PE_{redfermentation}$

4. Emissions from storage tank operations are then determined for both the red and white wine production cases by applying the factors described above.

   $PE_{whitestorage} = E_s \times T \times W_W$

   $PE_{redstorage} = E_s \times T \times W_R$

   E_s = wine storage emission factor based on District FYI-114 = 0.230 lb-VOC/1000 gallons of wine transferred
   T = Total post fermentation inter-tank transfers per batch of wine = 8

   The facility's PE for storage tank operations is taken to be the larger of the PE's for either red or white wine production.

   $PE_{storage}$ = greater of $PE_{whitestorage}$ and $PE_{redstorage}$

Example:

The wine production Potentials to Emit for VOCs will be determined for a hypothetical winery. The hypothetical winery has in-house Permits to Operate for all its wine tanks for operation as both fermenters and storage tanks except for eight (8) 60,000 gallon wine storage-only tanks (480,000 gallons total) which were permitted by an NSR action subsequent to the initial permitting. The eight storage-only tanks are limited by an SLC to a total annual throughput of 2,000,000 gallons per year with a maximum ethanol content of 14%. All fermentation and storage tanks meet Achieved-in-Practice BACT. Crushing and pressing equipment ratings are 150 and 100 tons per hour respectively.

The effective tank capacities and the wine grape processing equipment are summarized as follows:

- Effective Total Tankage Capacity = 14,625,000 and 14,614,000 gallons for white and red wine respectively = V_T (see Appendix A)
- Red Fermenter Capacity = 2,000,000 gallons = V_{FR}
- White Fermenter Capacity = total cooperage – storage only tanks = 14,520,000 gallons

- All storage tanks are insulated and equipped with PVRV's (storage tank breathing losses may be ignored).
- Crushing Capacity = 3,600 tons per day (150 tons/hour) = C
- Pressing Capacity = 2,400 tons per day (100 tons per hour) = P

1. Scenario 1 (all white):

   $W1 = C \times D_w \times M = 3{,}600 \times 120 \times 200 = 86.4$ MG/yr (million gallons per year)

   $W2 = P \times D_w \times M = 2{,}400 \times 120 \times 200 = 48.0$ MG/yr

   $W3 = (V_{FW} \times F_W \times D_w) / W_{FW} = (14{,}520{,}000 \times 95\% \times 120)/10$

   $= 166$ MG/yr

   $W4 = (V_T \times D_w) / R_{TW} = (14{,}625{,}000 \times 120)/50$

   $= 35.1$ MG/yr

   Taking the lesser of the four:

   $W_W = W2 = 35.1$ MG/yr

   Then,

   $PE_{whitefermentation} = E_{fw} \times W/1{,}000 = 2.5 \times 35.1 \times 10^6/1000 = 87{,}750$ lb-VOC/year

2. Scenario 2 (all red)

   - $W1 = C \times D_r \times M = 3{,}600 \times 120 \times 200 = 86.4$ MG/yr
   - $W2 = P \times D_r \times M = 2{,}400 \times 120 \times 200 = 48.0$ MG/yr
   - $W3 = (V_{FR} \times F \times D_r) / R_{FR} = (2{,}000{,}000 \times 80\% \times 120)/5 = 38.4$ MG/yr
   - $W4 = V_T \times D_r / R_S = 14{,}614{,}000 \times 120/45 = 39.0$ MG/yr

   Taking the lesser of the four:

   $W_R = W2 = 38.4$ MG/yr

   Then,

   $PE_{redfermentation} = E_{fr} \times W/1{,}000 = 6.2 \times 38.4 \times 10^6/1000 = 238{,}080$ lb-VOC/year

3. Establish PE for fermentation

   $PE_{fermentation}$ = greater of $PE_{whitefermentation}$ and $PE_{redfermentation}$
   $PE_{fermentation} = 238{,}080$ lb-VOC/year

4. Calculate PE for Storage Operations

   Since the calculated wine production rates have already considered the limitation introduced by the NSR limit on the storage-only tanks, no further consideration of throughput capacity is required for calculation the PE for storage operations. However, the storage-only tanks are limited to 14% ethanol for their maximum throughput of 2,000,000 gallons which requires a different emission factor. Per FYI-114, an emission factor of 0.198 lb-VOC/1000 gallons is applicable. Since the potential production of red wine is

greater than that of white as calculated above, storage throughput will be based on this production value (38.4 MG/yr) and a minimum of 8 transfers per gallon of wine:

$$PE_{storage} = E_s \times T \times W_R = 0.23/1000 \times (8 \times 38.4 - 2.0) \times 10^6 + (0.198/1000) \times 2.0 \times 10^6 = 70{,}592 \text{ lb-VOC/year}$$

Appendix A

Calculation of Effective Tank Volume

Most wine tanks in the District have been permitted as in-house PTO's and thus have no NSR limitations on their operation. However, subsequent to the initial permitting action, some wineries may have added storage tanks, permitted under NSR, either as Routine Replacements or as Fully Offset Units. These tanks are subject to throughput limits and thus may have an impact on the overall production capacity of the winery. To evaluate this impact within the calculation model presented in this policy, it is necessary to determine an "effective volume" which represents the total volume of the tankage at the facility and allows the calculation model to account for any limitation on production capacity resulting from the NSR limit on these additional tanks. The correction procedure is based on comparing the maximum number of annual tank turns (throughput expressed as the number of tank volumes per year) allowed for the NSR-limited tanks with the average minimum number of tank turns required to process the facility throughput based on residence time considerations only. Note that when a minimum of eight wine transfers during storage (per the calculation model) are considered for each gallon of wine produced, the minimum average number of tank turns is independent of the total capacity of the tanks and is established from the tank production capacity equation as follows:

White Wine:

$W4 = (8 \times (V_T \times D_w) / R_{TW}) \div V_T = (8 \times D_w / R_{TW}) = 8 \times 120/50 = 19.2$ turns

Red Wine:

$W4 = (8 \times (V_T \times D_r) / R_{TR}) \div V_T = (8 \times D_r / R_{TR}) = 8 \times 120/45 = 21.3$ turns

When the maximum number of turns allowed for certain NSR-permitted storage tanks is less than this average, these tanks are assumed to limit production capacity and an effective volume for these tanks, used for purposes of determining production capacity, must be determined. The actual volume of the NSR-limited tanks is adjusted by the ratio of the maximum allowed number of turns to the average minimum number of tank turns. This adjusted volume is used, in turn, to determine the effective volume of all tankage at the facility. The following example illustrates the correction:

Volume Correction Example

Using the example PE calculation presented in this policy, total tankage capacity is 15,000,000 gallons which includes 480,000 gallons of storage tanks limited to 2,000,000 gallons per year. The 2,000,000 gallon per year limitation for the NSR-limited tanks limits the number of turns for these tanks to:

2,000,000 gal/yr ÷ 480,000 gal/turn = 4.2 turns

The effective capacity for wine production for the NSR-limited tanks is considered to be limited to the extent that the maximum allowable number of turns is less than the minimum average number of turns required for wine production. Therefore, the effective volume for these tanks is considered to be:

(4.2/19.2) x 480,000 = 105,000 gallons for white wine production

(4.2/21.3) x 480,000 = 94,600 gallons for red wine production

Total tank capacity for the facility is then adjusted to an effective value by deducting the storage-only tanks from the total and then adding back the effective volume of the storage-only tanks, or

$V_{effective}$ = 15,000,000 – 480,000 + 105,000 = 14,625,000 gallons for white wine

$V_{effective}$ = 15,000,000 – 480,000 + 94,600 = 14,614,000 gallons for red wine

Appendix F
Annual PE2 Calculation

Calculation of the Annual Potential to Emit ($PE2_N$) for New Tanks

As discussed in Appendix E, tanks operating in a winery are not truly independent emissions units, with the result that the theoretical "stand-alone" annual potential to emit for individual tanks cannot be defined (their theoretical annual fermentation/storage capacity, and thus their potential annual emissions, must be established with consideration of all the other associated tanks in the facility). $PE2_N$ is therefore determined as the difference between the post project and the pre project potential emission from the wine production operation based on the collective physical capacity of the processing equipment at the facility.

A. Assumptions

- Maximum ethanol content of stored wine is 23.9% per existing permits.
- Grape crushing capacity at this facility is 5,760 tons per day based on information provided by the applicant for Project N-1103868.
- Pressing capacity at this facility is 5,400 tons per day based on information provided by the applicant for Project N-1103868.
- The total pre-project tank volume that can potentially be used for red wine fermentation is 1,874,520 gallons.
- The total pre-project tank volume that can potentially be used for white wine fermentation is 19,724,896 gallons.
- The total pre-project tank volume that can potentially be used for storage is 28,142,896 gallons.
- The total post-project tank volume that can potentially be used for red wine fermentation is 1,874,520 gallons.
- The total post-project tank volume that can potentially be used for white wine fermentation is 30,758,388 gallons.
- The total post-project tank volume that can potentially be used for storage is 39,176,388 gallons.
- Annual potential emissions for fermentation operations will be calculated as a combined value reflecting potential emissions from the winery's total wine production capacity.
- The calculation approach for determining combined emission values for the fermentation operations will follow the draft District policy attached in Appendix E.

B. Emission Factors

The required emission factors for fermentation and storage operations are taken from District FYI-114, *Estimating VOC Emissions from Winery Tanks*:

Annual emissions from red wine fermentation: E_{fr} 6.2 lb-VOC/1000 gallons annual throughput

Annual emissions from white wine fermentation: E_{fw} = 2.5 lb-VOC/1000 gallons annual throughput

Annual emissions from wine storage working losses @ 23.9% Ethanol: E_s = 0.338 lb-VOC/1000 gallons-annual throughput based on District FYI-114

C. Calculations

1. Annual emission potentials for fermentation operations from existing tanks

The potential emissions from the fermentation operation at this facility, based on the physical capacity of the existing processing equipment, $PE1_{E(fermentation)}$, is determined in the following sequence of calculations per draft District policy "Calculation of the Potential to Emit for VOC Emissions from Wine Fermentation and Storage Operations":

a. Potential fermentation emissions from white wine production are first determined:

White wine production capacity is determined as the lesser of the production capacities of either the crushing or pressing equipment or wine fermentation tanks at the facility:

W_W = White wine production capacity (gallons per year as measured immediately after pressing) is the lesser of the following three calculations:

$W1 = C \times D_w \times M$ (limited by crusher capacity)

$W2 = P \times D_w \times M$ (limited by pressing capacity)

$W3 = (V_{FW} \times D_w) / W_{FW}$ (limited by white fermenter volume)

$W4 = (V_T \times D_w) / R_{TW}$ (limited by overall tank processing)

where,

C = grape crushing capacity = 5,760 tons/day
D_w = days in a white wine crush season = 120 days

M = amount of grape juice produced per ton of grapes crushed = 200 gallons
P = pressing capacity = 5,400 tons per day
W_{FW} = White fermentation period = 10 days
R_{TW} = Total winery retention time for white wine, 40 + 10 = 50 days
V_{FW} = total volume of white wine fermenters = 19,724,896 gallons
V_T = Total Winery Cooperage = 28,142,896 gallons

Potential white wine fermentation emissions are then determined by applying the white fermentation emission factor stated in FYI-114:

$PE_{whitefermentation} = E_{fw} \times W_W$

E_{fw} = white wine emission factor = 2.5 lb-VOC/1000 gal

Performing the above calculations yields
W1 = 138.24 MG/year (million gals/year)
W2 = 129.60 MG/year
W3 = 224.86 MG/year
W4 = 67.54 MG/year
Selecting W_W = W4 = 67.54 MG/year and applying the emission factor for white wine fermentation yields:

$PE_{whitefermentation}$ = 168,857 lb-VOC/year

Storage emissions are calculated as follows:

$PE1_{E(storage)} = E_s \times T \times W_R$

Where:

E_s = 0.363 lb-VOC/1000 gallons of wine transferred for 23.9% alcohol wine

T = Total post fermentation inter-tank transfers per batch of wine
T = 8

W_W = maximum quantity of wine the facility can produce

= 67.54 million gallons of white wine per year

$PE1_{E(storage)} = E_s \times T \times W_W$

$= (0.363/1000) \times 8 \times (67.54) \times 10^6$

= 196,136 lb-VOC/year

Total emissions for white wine production are then the sum of the fermentation and storage emissions

$PE1_E$ = 168,157 + 196,136 = **364,293**

b. Potential fermentation emissions from red wine production are then calculated:

Red wine production capacity is determined as the lesser of the production capacities of either the crushing, pressing or tankage.

W_R = Red wine production capacity (gallons per year as measured immediately after pressing) and is the lesser of the following four calculations:

W1 = C x D_r x M (limited by crusher capacity)

W2 = P x D_r x M (limited by pressing capacity)

W3 = (V_{FR} x F x D_r) / R_{FR} (limited by red fermenter volume)

W4 = (V_T x D_r) / R_{TS} (limited by overall tank processing)

C = grape crushing capacity= 5,760 tons/day
D_r = days in a red wine crush season = 120 days
F = Fill factor for red wine fermentation = 80%
M = amount of grape juice produced per ton of grapes crushed = 200 gallons
P = pressing capacity = 5,400 tons per day
R_{FR} = Red fermentation period = 5 days
R_{TS} = Total winery retention time for red wine, 40 + 5 = 45 days
V_{FR} = total volume of red wine fermenters = 1,874,520 gallons
V_T = Total Winery Cooperage = 28,142,896 gallons

Potential red wine fermentation emissions are then determined by applying the red fermentation emission factor stated above.

$PE_{redfermentation}$ = E_{fr} x W/1,000
E_{fr} = red wine emission factor = 6.2 lb-VOC/1000 gal (District Rule 4694)

Performing the above calculations yields

W1 = 138.24 MG/year (million gals/year)

W2 = 129.60 MG/year

W3 = 35.99 MG/year

W4 = 75.10 MG/year

Selecting W_R = W3 = 35.99 MG/year and applying the emission factor for red wine fermentation yields:

$PE_{redfermentation}$ = 223,143 lb-VOC/year

d. Storage emissions are calculated as follows:

$PE1_{E(storage)}$ = E_s x T x W_R

Where:

E_s = 0.363 lb-VOC/1000 gallons of wine transferred for 23.9% alcohol wine

T = Total post fermentation inter-tank transfers per batch of wine
T = 8

W_W = maximum quantity of wine the facility can produce
= 35.99 million gallons of red wine per year

$PE1_{E(storage)} = E_s \times T \times W_W$
$= (0.363/1000) \times 8 \times (35.99) \times 10^6$
= 104,514 lb-VOC/year

Total emissions for red wine production are then the sum of the fermentation and storage emissions

$PE1_E$ = 223,143 + 104,514 = 327,657

c. The facility's emission potentials for fermentation and storage operations is then taken to be the greater of either the white or red emissions potentials determined above.

$PE1_E$ = greater of PE_{white} and PE_{red}

$PE1_E = PE_{white}$

$PE1_E$ = 508,084 lb-VOC/year

2. Annual potential emissions for fermentation operations from existing plus new tanks

a. Potential fermentation emissions from white wine production are first determined:

White wine production capacity is determined as the lesser of the production capacities of either the crushing or pressing equipment or wine fermentation tanks at the facility:

W_W = White wine production capacity (gallons per year as measured immediately after pressing) is the lesser of the following three calculations:

$W1 = C \times D_w \times M$ (limited by crusher capacity)

$W2 = P \times D_w \times M$ (limited by pressing capacity)

$W3 = (V_{FW} \times D_w) / W_{FW}$ (limited by white fermenter volume)

$W4 = (V_T \times D_w) / R_{TW}$ (limited by overall tank processing)

where,

C = grape crushing capacity = 5,760 tons/day
D_w = days in a white wine crush season = 120 days
M = amount of grape juice produced per ton of grapes crushed = 200 gallons
P = pressing capacity = 5,400 tons per day
W_{FW} = White fermentation period = 10 days
R_{TW} = Total winery retention time for white wine, 40 + 10 = 50 days
V_{FW} = total volume of white wine fermenters = 30,758,388 gallons
V_T = Total Winery Cooperage = 39,176,388 gallons

Potential white wine fermentation emissions are then determined by applying the white fermentation emission factor stated in FYI-114:

$PE_{whitefermentation} = E_{fw} \times W_W$

E_{fw} = white wine emission factor = 2.5 lb-VOC/1000 gal

Performing the above calculations yields
W1 = 138.24 MG/year (million gals/year)
W2 = 129.60 MG/year
W3 = 350.65 MG/year
W4 = 94.02 MG/year
Selecting W_W = W4 = 94.02 MG/year and applying the emission factor for white wine fermentation yields:

$PE_{whitefermentation}$ = 235,050 lb-VOC/year

e. Storage emissions are calculated as follows:

$PE1_{E(storage)} = E_s \times T \times W_R$

Where:

E_s = 0.363 lb-VOC/1000 gallons of wine transferred for 23.9% alcohol wine

T = Total post fermentation inter-tank transfers per batch of wine
T = 8

W_W = maximum quantity of wine the facility can produce
= 35.99 million gallons of white wine per year

$PE1_{E(storage)} = E_s \times T \times W_W$
$= (0.363/1000) \times 8 \times (94.02) \times 10^6$
= 273,034 lb-VOC/year

Total emissions for red wine production are then the sum of the fermentation and storage emissions

$PE1_E = 235,050 + 273,034 = 508,084$

b. Potential fermentation emissions from red wine production are then calculated:

Red wine production capacity is determined as the lesser of the production capacities of either the crushing, pressing or tankage.

W_R = Red wine production capacity (gallons per year as measured immediately after pressing) and is the lesser of the following four calculations:

$W1 = C \times D_r \times M$ (limited by crusher capacity)

$W2 = P \times D_r \times M$ (limited by pressing capacity)

$W3 = (V_{FR} \times F \times D_r) / R_{FR}$ (limited by red fermenter volume)

$W4 = (V_T \times D_r) / R_{TS}$ (limited by overall tank processing)

C = grape crushing capacity= 5,760 tons/day
D_r = days in a red wine crush season = 120 days
F = Fill factor for red wine fermentation = 80%
M = amount of grape juice produced per ton of grapes crushed = 200 gallons
P = pressing capacity = 5,400 tons per day
R_{FR} = Red fermentation period = 5 days
R_{TS} = Total winery retention time for red wine, 40 + 5 = 45 days
V_{FR} = total volume of red wine fermenters = 1,874,520 gallons
V_T = Total Winery Cooperage = 39,176,388 gallons

Potential red wine fermentation emissions are then determined by applying the red fermentation emission factor stated above.

$PE_{redfermentation} = E_{fr} \times W/1,000$
E_{fr} = red wine emission factor = 6.2 lb-VOC/1000 gal (District Rule 4694)

Performing the above calculations yields

W1 = 138.24 MG/year (million gals/year)

W2 = 129.60 MG/year

W3 = 35.99 MG/year

W4 = 104.47 MG/year

Selecting W_R = W3 = 35.99 MG/year and applying the emission factor for red wine fermentation yields:

$PE_{redfermentation}$ = 223,143 lb-VOC/year

d. Storage emissions are calculated as follows:

$PE1_{E(storage)} = E_s \times T \times W_R$

Where:

E_s = 0.363 lb-VOC/1000 gallons of wine transferred for 23.9% alcohol wine

T = Total post fermentation inter-tank transfers per batch of wine
T = 8

W_W = maximum quantity of wine the facility can produce

= 35.99 million gallons of red wine per year

$PE1_{E(storage)} = E_s \times T \times W_W$

$= (0.363/1000) \times 8 \times (35.99) \times 10^6$

= 104,514 lb-VOC/year

Total emissions for red wine production are then the sum of the fermentation and storage emissions

$PE1_E$ = 223,143 + 104,514 **= 327,657 lb-VOC/year**

d. The facility's emission potentials for fermentation and storage operations is then taken to be the greater of either the white or red emissions potentials determined above.

$PE1_E$ = greater of PE_{white} and PE_{red}

$PE1_E = PE_{white}$

$PE1_E$ = 508,084 lb-VOC/year

3. $PE2_N$ for New Tanks

$PE2_N$ is calculated as the difference between the post project and pre project potential emissions based on physical capacity:

Potential Emissions Based on Physical Capacity of Wine Processing Equipment			
	Fermentation	Storage	Total
Pre Project	168,157	196,136	364,293
Post Project	235,050	273,034	508,084
$PE2_N$	**66,893**	**76,898**	**143,791**

Appendix G
BACT Guideline 5.4.14 and Top-Down Analysis for Wine Fermentation Tanks

San Joaquin Valley
Unified Air Pollution Control District

Best Available Control Technology (BACT) Guideline 5.4.14

Emission Unit: Wine Fermentation Tank

Industry Type: Winery

Equipment Rating: All Capacities

Last Update: June 15, 2009

Pollutant	Achieved in Practice or contained in SIP	Technologically Feasible	Alternate Basic Equipment
VOC	Temperature-Controlled Open Top Tank with Maximum Average Fermentation Temperature of 95°F	1. Capture of VOCs and thermal oxidation or equivalent (88% control). 2. Capture of VOCs and carbon adsorption or equivalent (86% control). 3. Capture of VOCs and absorption or equivalent (81% control) 4. Capture of VOCs and condensation or equivalent (81% control).	

BACT is the most stringent control technique for the emissions unit and class of source. Control techniques that are not achieved in practice or contained in a state implementation plan must be cost effective as well as feasible. Economic analysis to demonstrate cost effectiveness is required for all determinations that are not achieved in practice or contained in an EPA approved State Implementation Plan.

***This is a Summary Page for this Class of Source - Permit Specific BACT Determinations on Next Page(s)**

A. Top-Down BACT Analysis for VOC Emissions from Wine Fermentation Tanks

Step 1 - Identify All Possible Control Technologies

Ethanol is the primary VOC produced during wine fermentation. The vent stream from a fermentation tank is primarily CO_2 with equilibrium concentrations of ethanol and H_2O which depend primarily on the temperature and ethanol concentration of the liquid in the tank. Previous researchers[1] have demonstrated that ethanol is released to the atmosphere primarily as a result of phase equilibration of the water and ethanol liquid phase in the fermentation tank with the CO_2 gas (evolved from the fermentation reaction). Since fermentation is a batch process, with typical frequencies at 2-4 batches per month over a 12 week crush period, both the flow rate of the vent stream and the uncontrolled emission rate of ethanol are highly variable with time. In addition, wine fermentations occasionally become unstable resulting in a "foam-over" of the tank contents (similar to the results of shaking an open carbonated beverage). To be considered technologically feasible, an emission control system must be able to operate reasonably under this batch operation scenario and be able to accommodate an occasional foam-over.

Additionally, wine is both a food grade product and a consumer product whose consumer acceptance is heavily influenced by style issues. Therefore, to be considered technologically feasible, an emission control system must 1) be designed to operate in accordance with the cleanliness and sanitation standards of the wine industry, the U.S. Food and Drug Administration, and with other requirements of state and local health authorities and 2) have no impact on the operation of the fermentation tank with respect to style, quality, or consistency of quality of the wine produced.

A review of established control technologies for VOC emissions indicates that the following would be potentially applicable to the control of ethanol emissions from fermentation tanks:

1. Temperature-Controlled Open Top Tank with Maximum Average Fermentation Temperature of 95°F (current Achieved-in-Practice operation)
2. Adsorption (often using activated carbon, which transfers the VOC in the air onto a solid substrate);
3. Thermal or Catalytic Oxidation (conversion of the VOC to CO_2);
4. Absorption ("scrubbers", which transfer the VOC in air emissions to a liquid waste stream);
5. Condensation (conversion of the VOC gases into liquids); and
6. Biological control systems (e.g., bio-filters or bio-scrubbers)

Of the identified control technologies listed above, options 2 through 6 are all classified as capture and control systems and therefore all share a common requirement for a capture system. Since the capture system is common to these options, issues regarding the installation of such a system on fermentation tanks are also common and will thus be considered independently of the control technology selected.

---

[1] Modeling and Prediction of Evaporative Ethanol Loss During Wine Fermentations, Williams and Boulton, Am. J. Enol. Vitic., Vol 34, No. 4, 1983.

Emissions Capture System

The generic capture system applicable to options 1 through 5 consists primarily of i) a tank interface for connection of ductwork to the tank(s), ii) ductwork running from the tank(s) to the control device including valving and instrumentation, and iii) a separation device (knock out vessel) to prevent entrained liquids in the vent stream (such as might occur in a foam-over) from entering the control device and potentially damaging it. Most of the technological uncertainties and potential issues associated with the installation of capture and control systems on fermentation tanks are associated with the operability of the capture system and the potential impact of the system on the fermentation tank operation. Essential fermentation-specific features of the capture system are:

- The system must connect multiple tanks to a common control device. Reasons for this feature include:
  - The batch nature of the fermentation tank operation requires that multiple tanks be manifolded together to provide an averaging effect for reasonably continuous operation of a common control device. Due to the batch operation of each tank, the design capacity of a control device dedicated to a single tank would only be needed a few hours per week at the most and would operate a significant amount of time with zero or near-zero flow from the tanks. The result would be excessive operating cost for the control device and/or excessive turndown and cycling of the control device.
  - Installation of a dedicated control device for each tank would be prohibitively expensive due to excessive redundancy in the number of control devices installed and excessive control device capacity relative to the annual emission reductions achievable.
- The system must be capable of handling entrained liquids from the fermentation tanks and of preventing cross-contamination between tanks. A reasonable design will include features to avoid entry of entrained liquid from each tank into the common header that interconnects the tanks and will then continuously slope the main header from a high point, where the tank connects to the header, down to a knock-out vessel located at the control device to ensure that liquids entering the header are not distributed to any of the connected tanks. A design approach for minimizing the entry of liquids from the tanks to the main header has been proposed in the Eichleay study[2] for the Gallo-Livingston Winery in which a motor operated isolation damper is installed in the branch duct from each tank to the main header. Closure of these valves would be actuated by a control system based on sensing a foam-over or other high liquid level condition in the tank. In the event of a foam-over and a closure of the isolation damper, an individual tank emergency vent system must also be provided to release the gases to the atmosphere to avoid an over-pressure of the tank. The basic proposed design for the emergency vent includes a frangible (break-away) duct connection at the tank with an air gap which would allow large-scale venting of the tank with minimal entry of liquid into the ducting. A prototype of this design was demonstrated in 1990 in a program evaluating control of ethanol emissions from wine fermenters, conducted at the E&J Gallo Winery in Fresno, California [3]. The VOC

[2] Eichleay Engineers, Fermenter VOC Emissions Control Cost Estimate, 2005.

[3] Akton Associates, A Demonstration Program, Ethanol Emissions Control from Wine Fermentation Tanks Utilizing Carbon Adsorption Technology, 1990

capture system consisted of an emissions collection hood, located above the manway, connected by ductwork to a VOC control device. The collection hood was larger than the man-way and was suspended above the opening, creating an air gap between the tank and the hood. The design included a fan with a flow-rate sufficient to pull emissions into the collection hood and force the emissions through the ductwork to the emissions control device. Based on results reported in the Gallo study, District staff considers it reasonable to expect similar emissions collection systems to have a capture efficiency of at least 90%.

- Requirements for sloping of the main header (typically a minimum of ¼ inch per foot for efficient drainage) will set the elevation requirement of the main header at the most remote tank location. Minimum routing elevation of the headers within a plant is typically set at approximately 20 feet (typically at major road crossings) to avoid interference with operations and maintenance equipment access. As demonstrated in the Eichleay study, these constraints can potentially result in a high point elevation of 30 to 40 feet for the manifold header, depending upon the distance between the most distant tank and the control device.
- The system must include provisions for cleaning and sterilization to meet the requirements for handling of food grade products. Fermentation systems must be cleaned and sterilized between each fermentation batch and this is typically accomplished by multiple washings with solutions of potassium hydroxide and chlorine dioxide. Since it would be impractical to disassemble the ductwork for cleaning, the ductwork design must incorporate a "clean-in-place" (CIP) system. Such a system has been proposed in the Eichleay study, consisting of a fixed spray header located inside the duct to apply the cleaning solutions to the inner wall of the duct plus ancillary systems to store and deliver the cleaning solutions to the spray system. In addition, cleanliness considerations dictate that the ductwork be constructed of stainless steel.
- The ductwork system must be supported independently of the fermentation tanks since the tanks are generally not designed to support any significant structural load. The ductwork presents a substantial load since it must be constructed with sufficient wall thickness to be self-supporting over spans of 20+ feet and be durable enough for industrial plant operations as well as to support in-line components such as the motor operated valves, check valves and other items. Internally it contains a spray header and wash nozzles and must be designed to run approximately 1/3 full of liquid due to the washing and sterilization operation. The potential load of the ductwork, combined with the elevation requirements for the ducting and the lack of structural support available from the tanks, dictates that substantial free standing steel structures be provided for support of the ductwork.

Technologically Feasible Control Technologies

Option 1 – Temperature-Controlled Fermentation in an Open Top Tank

The current Achieved-in-Practice operation is temperature-controlled fermentation in an open-top tank. Prior to the advent of ammonia-based refrigeration, wine fermentations were often conducted at average temperatures exceeding 100 °F. As mentioned previously, fermentation temperature is now controlled, typically using ammonia-based refrigeration. Since fermentation emissions increase with operating temperature, a temperature-controlled operation results in reduced VOC emissions from the fermentation

operation. Additionally, tanks are typically used for both storage and fermentation. For these tanks, the pressure/vacuum valve used during storage is removed during fermentation to avoid fouling the valve in the event of a run-away reaction during the fermentation process (typically resulting in a "foam-over") and the man-way on the top of the tank is fully opened to allow unhindered release of the large volume of fermentation gases. Fermentation tanks not used for storage may be designed without tops entirely.

Temperature-controlled fermentation is considered to be the baseline for fermentation operations and the evaluation of emission reductions for other technologically feasible options will be relative to this baseline.

Option 2 - Adsorption Vapor Recovery

Adsorption vapor recovery is accomplished by passing the VOC-laden gas through beds containing adsorbents that have a high surface area to weight ratio. Typical adsorbents are activated carbon, zeolite, or organic polymers. As the gas stream passes through the bed, organic compounds adsorb weakly onto the adsorbent's surface. Adsorption of the hydrocarbon molecules proceeds until the available surface area is filled or saturated with VOC molecules. The VOC molecules are retained until the regeneration step, or disposal of the spent adsorbent.

Desorbing or removing captured VOCs regenerates the adsorbent. Decreasing the pressure, reducing the hydrocarbon concentration around the adsorbent or increasing the temperature of the bed can perform regeneration. A combination of these steps can also be used for regeneration. There are three basic types of adsorption systems available to recover or remove hydrocarbon vapors from an air stream. Two of these systems regenerate the adsorbent in-situ for reuse. The third system requires removal of the adsorbent to another site for regeneration.

The two systems that provide in-situ regeneration are: Pressure Swing Regenerated Systems and Thermally Regenerated Systems (or a combination of the two methods). Since the net result of the combined adsorption and regeneration process only results in transfer of the ethanol from the fermentation vent stream to another liquid or gaseous stream, further treatment of the effluent of the regeneration process is required to either destroy or recover the ethanol (typically thermal oxidation of the stripping gas stream or water treatment in the case of steam stripping).

Based on a draft Technical Assessment Document (TAD) prepared by ARB[4], a control efficiency of 95% is considered reasonable for adsorption systems which, when combined with an expected capture efficiency of 90%, yields an overall emission reduction of 86% for this technology.

Option 3 – Thermal Oxidation

A thermal oxidizer (TO) destroys VOCs by the process of combustion. A basic TO system consists of a combustion chamber, burner, stack, and combustion controls. All hydrocarbons are oxidized to carbon dioxide and water vapor by the proper mix of temperature, residence time and turbulence within the reactor chamber. Combustion of

[4] Nelson Chan, et. al, A suggested Control Measure for Control of Ethanol Emissions From Winery Fermentation Tanks. October 7, 1986

the contaminated gas stream occurs at high temperatures, normally 650°C to 870°C (1,200°F to 1,600°F) when treating low concentration streams. Recent guarantees provided by TO vendors for destruction of ethanol in air in other proposed projects under review by the District have been based on a minimum combustor temperature of 1,500°F.

TO systems can be divided into recuperative or regenerative systems, based on methods used to increase operating efficiencies by capturing heat from the combustion process. Recuperative TO systems increase fuel efficiency by use of a gas pre-heating section and a heat recovery section. Heat recovery can be as high as 70%. A regenerative system provides extremely high thermal-energy recovery; up to 95% of heat energy can be recovered. Regenerative TO systems use a ceramic heat-exchange bed to preheat process air to within 5% of the oxidation temperature.

VOC conversion efficiencies range from 95% to 99.9% for TO systems. However, the combustion of supplemental fuel for the oxidation step (the amount depending upon the fuel value of the VOC and the level of heat recovery employed) produces NOx, an ozone precursor like VOC, thus offsetting some of the VOC emission reduction. The District considers that a control efficiency of 98% is technologically feasible which, when combined with an expected capture efficiency of 90%, yields an overall emission reduction of 88% for this technology.

Option 4 – Wet Scrubbing (Absorption)

The basic process involved in wet scrubbing is the contact of a polluted gas stream with a liquid solution. During operation, gas flows upward through a column containing packing or other mass transfer media. The scrubbing liquid is delivered to the top of the column and flows down (by gravity) through the porous mass transfer media, generating a substantial interfacial surface area between the gas and liquid phases in a counterflow arrangement which provides optimal mass transfer. Gaseous contaminants are absorbed into the liquid and the decontaminated gas stream flows out of the scrubber.

In a pilot study conducted by ARB in 1987, wet scrubbing demonstrated greater than 90% reduction in ethanol emissions. The District considers that a control efficiency of 90% is technologically feasible which, when combined with an expected capture efficiency of 90%, yields an overall emission reduction of 81% for this technology.

Option 5 – Condensation, Refrigeration, and Cryogenic Systems

Condensation, refrigeration, and cryogenic systems remove organic vapor by condensing the target gases on cold surfaces. These cold conditions can be created by passing cold water through an indirect heat exchanger, by spraying cold liquid into an open chamber with the gas stream, by using a refrigerant to create very cold coils, or by injecting cryogenic gases such as liquid nitrogen into the gas stream. The concentration of VOCs is reduced to the level equivalent to the vapor pressures of the compounds at the operating temperature. Removal efficiencies attainable with this approach depend strongly on the outlet gas temperature. For cold-water-based condensation systems, the outlet gas temperature is usually in the 40 to 50°F range, and the VOC removal efficiencies can be in the 90% to 99% range depending on the vapor pressures of the specific compounds. For refrigerant and cryogenic systems, the removal efficiencies can be considerably above 99% due to the extremely low vapor pressures of essentially all VOC compounds at the very low operating temperatures of -70°F to less than -200°F. Water vapor content in the

gas stream may place a lower limit on the outlet gas temperature due to potential ice formation.

The application of refrigerated condenser to the control of ethanol emissions from a fermentation tank was examined by the wine industry(x). The results of that study indicated that a 90 % ethanol recovery could be achieved at an outlet gas temperature of -12 ^{0}F. However, it was noted that ice formation could be a problem at this temperature and that special equipment designs would be required for reasonable operation. In addition, the ethanol is recovered in aqueous solution and must be further process for recovery of the ethanol. The District considers that a control efficiency of 90% is technologically feasible which, when combined with an expected capture efficiency of 90%, yields an overall emission reduction of 81% for this technology.

Option 6 - Biological Oxidation

In a biological oxidation system, VOCs are removed by forcing them to absorb into an aqueous liquid or moist media inoculated with microorganisms that consume the dissolved and/or adsorbed organic compounds. The control systems usually consist of an irrigated packed bed that hosts the microorganisms (biofilters). A presaturator is often placed ahead of the biological system to increase the gas stream relative humidity to more than 95%. The gas stream temperatures are maintained at less than approximately 105°F to avoid harming the organisms and to prevent excessive moisture loss from the media.

Biological oxidation systems are used primarily for very low concentration VOC-laden gas streams. The VOC inlet concentrations are often less than 500 ppm and sometimes less than 100 ppm. The overall VOC destruction efficiencies are often above 95%.

Step 2 - Eliminate Technologically Infeasible Options

All of the options listed above are considered to be technologically feasible with the exception of options 6 (Biological Oxidation).

Option 6 (Biological Oxidation) is determined to be infeasible for the following reasons:

1. Emissions from the tanks are highly intermittent, with the emission rate peaking sharply during a 1-2 day period during the 5-8 day fermentation cycle. Each tank only operates for 3-5 cycles per year on average. The intermittent nature of the emissions would not be appropriate to maintaining a healthy bed of microorganisms in the filter.

2. Wine is a food-grade product and requires stringent sanitation practices from the standpoint of eliminating contamination and preserving product quality. The introduction of a system containing microorganisms would not be possible within the sanitation practices normally employed and could potentially be detrimental to wine quality.

Step 3 - Rank Remaining Control Technologies by Control Effectiveness

The options enumerated above can be ranked as follows:

Rank by Control Effectiveness			
Rank	Option	Control	Overall Capture & Control Efficiency(*)
1	3	Capture of VOCs and thermal oxidation	88 %(**)
2	2	Capture of VOCs and carbon adsorption	86 %
3	4	Capture of VOCs and absorption.	81 %
4	5	Capture of VOCs and condensation	81 %
5	1	Temperature-Controlled Open Top Tank with Maximum Average Fermentation Temperature of 95°F	Baseline (Achieved-in-Practice)

(*) Capture efficiency (90%) x removal efficiency for control device
(**) Following recent District practice, thermal and catalytic oxidation will be ranked together.

Step 4 - Cost Effectiveness Analysis

General Approach for Cost Effectiveness

Due to differences in processing temperature, red wine has an emissions factor of 6.2-lb VOC/1,000 gallons whereas white wine has an emissions factor of 2.5-lb/1000 gallons of fermented wine per District Rule 4694, *Wine Fermentation and Storage Tanks*. In addition, red wine fermentation batches are completed in 3 to 5 days versus 10 to 14 days for white wine fermentation. Therefore, a red wine fermentation tank of a given size will potentially operate at significantly higher throughput and produce significantly higher emissions per unit of throughput relative to a white wine fermentation tank of the same size. As a result of these differences in emission rates, the cost effectiveness for controlling emissions from red wine will be fundamentally better than that for white wine and thus the cost effectiveness analysis will be first performed for red wine only. In the event a technology is shown to be cost effective for red wine, that particular technology will be analyzed for white wine fermentation as well.

The following emission control technologies have been determined to be technologically feasible for control of VOC emissions from wine fermentation tanks:

- Thermal Oxidation (88% control)
- Carbon Adsorption (86% control)
- Refrigerated Condenser (81% control)
- Wet Scrubber (81% control)

Recognizing that "thermal oxidation" includes both recuperative and regenerative thermal oxidizers the cost effectiveness of the following cases will be examined for the determination of BACT for wine fermentation:

Case 1 Thermal oxidation with 0% heat recovery (low capital/high operating cost)
Case 2 Regenerative thermal oxidation with 95% heat recovery (high capital/low operating cost)
Case 3 Refrigerated Condensers
Case 4 Water scrubber

Case 5 Carbon adsorption

A cost-effectiveness analysis is not required for tmper4ature-controlled fermentation since this option is Achieved-in-Practice. To establish a comparative physical scope of each of the above cases, the District will take an industry-wide approach based of applying the five different control technology cases to red wine fermentation tanks located at the E & J Gallo Winery at Livingston, California (Facility N-1237), rather than the O'Neill facility. The rationale for this is based on the following:

- The Gallo facility at Livingston is sufficiently representative of typical red wine fermentation facilities located at major source wineries to allow it to serve as a general model for the physical scope requirements of such facilities including the O'Neill facility.
- The Gallo facility is currently the largest winery in the world and the average fermentation tank size is larger than that of the O'Neill facility. Any control technology found to not be cost effective for the Gallo facility can be assumed to be not cost effective to smaller facilities such as O'Neill as well due to economies of scale. If any technology is determined to be cost effective at Gallo, it will then be analyzed for the O'Neill facility as well to confirm cost effectiveness for the smaller operation.
- The Gallo facility was used as a basis for engineering and cost effectiveness studies in development of District Rule 4694 and substantial scope and cost information is available for this facility pertaining to the scope of control system requirements and that of the ancillary systems required to support the basic emission control units (such as ductwork and supports and the CIP systems for the ductwork). The Eichleay study details the potential application of VOC controls to this facility and addresses many of the technical issues and the general site specific factors for wineries. This study developed two separate estimates, one for the fermentation control system installation ("Base Estimate") and a second "Utilities Estimate" to cover the clean-in-place system, the expansion of the plant electric utility and the instrument air system. District staff has reviewed the estimating methodology employed in the Eichleay estimates and found that the estimating approach is fundamentally sound and follows accepted practice in the engineering and construction industry, applying reasonable unit rates and costs for materials and labor for development of direct costs. This information is available to use as a basis for this cost effectiveness analysis. The Eichleay Base and Utilities Estimates are attached as BACT Attachment B.

Estimating Basis

Estimates of Total Capital Investment (TCI), annual costs, potential emission reductions, and the resulting cost effectiveness have been prepared for each of the control technology cases above utilizing selected portions of the Direct Costs developed by the Eichleay study. The general approach and basis of the estimates is as follows:

1. Except for specific substitutions or modifications as listed below, EPA's cost template for VOC incineration systems, as presented in the EPA Control Cost Manual, Section 3.2, Tables 2.8 and 2.9, was used. Typical site specific factors and other required direct costs not covered by the template have been extracted from the Eichleay study and inserted in the template to cover all the scope elements required for installation of controls on fermentation tanks. To ensure that all estimate cases are comparative, the EPA cost template (with EPA cost factors) was used to develop the direct cost of installing the purchased control device for all estimate cases. The control device is

taken to include the upstream separator vessel which is used to separate any entrained liquids from the fermentation tank vent stream before it enters the control device.

2. All estimates are based on the general facilities design prepared by Eichleay for the Gallo winery at Livingston, CA. Using this basis, the impact of substituting different control technologies will be examined. It is assumed that the basic scope of ductwork and supports, tank modifications, ancillary systems and site specific costs will be common to all technologies.

3. The Gallo facility consists of 60 red wine fermentation tanks with a combined nominal capacity of 6,850,000 gallons. In the general facilities design as prepared by Eichleay the tanks are grouped into four separate groups of tanks, each group separately manifolded together and ducted to a separate dedicated control device (See Eichleay drawing SK-30892-001 in BACT Attachment E). The tank groupings are designated as:

   VOC-1 Seventeen (17) 100,000 gallon tanks

   VOC-2 Twelve (12) 200,000 gallon tanks

   VOC-3 Ten (10) 100,000 gallon tanks and seven (7) 50,000 gallon tanks

   VOC-4 Fourteen (14) 100,000 gallon tanks

4. Control device capacity (per the Eichleay study) is based on a peak vapor rate of 9.75 scfm/1000 gallons of wine fermenting at an 85 ^{0}F fermentation temperature. Since the Eichleay study was based solely on using a thermal incinerator as the control device, an additional 23.6 % flow capacity is included in the control device capacity to account for the combustion air which must be added since the vent stream from the tank contains only CO2, water and ethanol. Other non-combustion control technologies do no require additional air and may thus be rated at a lower flow capacity. On this basis, the four control devices have been determined to require the following capacities:

Red Fermentation Capture and Control Systems Proposed for Gallo-Livingston Per Eichleay Engineering Study

VOC Device Number	No. of Tanks	Fermentation Tank Capacity (gallons)	Total Capacity of Red Fermentation Tanks (gallons)	Combustion Control Device Flow Capacity per the Eichleay Study (SCFM)	Non-Combustion Control Device Flow Capacity (SCFM)
VOC-1	17	100,000	1,700,000	16,000	12,900
VOC-2	12	200,000	2,400,000	22,000	17,800
VOC-3	10	100,000	1,350,000	13,000	10,500
	7	50,000			
VOC-4	14	100,000	1,400,000	13,000	10,500
Total	60		6,850,000	64,000	51,700

5. Capacities and costs for control devices for each case were developed based on the capacities of the four VOC systems listed above. Sources for pricing of control devices were as follows:

   Recuperative Thermal Oxidizers: EPA Cost Control Manual, Section 3.2, Chapter 2, Equation 2.29

   Regenerative Thermal Oxidizers: Vendor quotations obtained by Eichleay Engineering

   Carbon Adsorption System: Technical Assessment Document, p.17

   Water Scrubbers: STI Study[5], Table 5

   BACT Attachment C presents the developed capacities and estimated purchase prices for the control devices for each estimate case..

6. Purchased equipment costs for the knock out vessels (common to all estimate cases) have been extracted from the main Eichleay estimate. A purchased material cost of $148,000 for the knock out vessels was taken from page 15 of Eichleay's main estimate. Sizing criteria is presented in the Eichleay study and the pricing was developed based on Eichleay's in-house estimating data for this type of equipment derived from purchasing experience on previous projects.

7. Direct costs taken from the Eichleay study will be used for estimation of site specific and other costs not covered by the equipment factors in the EPA VOC incineration cost template. These costs include site preparation, ductwork, structural steel pipeway and associated foundations for ductwork support, clean-in-place (CIP) system, expansion of the plant electric utility, modification of fermentation tanks for duct connections, and the instrumentation system for control of tank foam over.

8. Site preparation costs to develop a plot area for the VOC control equipment have been extracted from page 4 of the main Eichleay estimate which the District considers to be typical of the requirements which would be encountered at most existing major wineries. Most wineries are constructed with the tanks located in tight groups with minimal spacing between the tanks, requiring that control devices be installed on the perimeter of the winery, typically undeveloped agricultural land. Extracted costs from the Eichleay include subcontract pricing for demolition of an existing road, installation and compaction of fill, and new pavement to develop a plot space sufficient to install four new control devices with upstream separators and associated piping and ducting. These costs total $1,254,000 and are based on budgetary subcontract pricing obtained by Eichleay.

9. The total direct cost for ductwork was extracted from the Eichleay study. A material cost of $1,104,800 and an installation labor cost of $940,500 for the ductwork has been extracted from pages 16 through 23 of the main Eichleay estimate. California sales tax of 8% and freight charges of 3% were added to the materials cost to arrive at a direct cost of $2,167,000 for the ductwork. Estimated ductwork quantities are based on Eichleay plan drawing SK-30913-001 and the process flow diagram presented in Eichleay drawing SK-30892-003 (see BACT Attachment E). Unit costs for fabricated stainless steel ductwork were based on a budgetary quotation obtained by Eichleay from Viron International, a ductwork spool fabricator.

---

[5] Sonoma Technology, Inc., Control Technology Evaluation: Wineries – Fermentation Processes, Control Measures Assessment STI-903340-2429a-CMA, October 21, 2003.

10. A material cost of $1,779,600 and an installation labor cost of $752,000 for structural steel to support the new ductwork system and associated piping has been extracted from the totals presented on page 8 of the Eichleay base estimate. California sales tax of 8% and freight charges of 3% were added to the materials cost to arrive at a direct cost of $2,727,000 for the structural steel. Steel design and quantities in this estimate are based on Eichleay plan drawing SK-30913-001 and the steel structure sections presented in Eichleay drawing SK-S12 (see BACT Attachment E). Fabricated steel pricing was based on a quotation obtained by Eichleay from a structural steel fabricator in Bakersfield, CA.

11. Costs for heavy lift equipment including heavy cranes and use of a helicopter operation to set steel structures and ductwork was taken from page 24 of the main Eichleay estimate. Pricing was obtained by Eichleay from a helicopter firm based out of the Fresno Airport.

12. The Eichleay utility estimate developed a total direct cost of $5,859,000 for both the CIP system and the expansion of the plant electric utility. Eichleay drawing SK-30892-004 provides a piping and instrumentation diagram for the CIP chemicals storage and supply system. Drawing SK-30892-006 illustrates the CIP spray header installation in the ductwork. Expansion of the electric utility included new 12 kV switchgear and 1500 kVA transformer to supply power from the existing switchyard to the project (see Eichleay drawings 30892-SK-E01 and E02). A direct allocated cost of $314,000 for the electric utility expansion was extracted from page 8 of the utilities estimate. Total Direct Cost for this item is taken as 391,000 after pro-rating the Contractor's Fee and other unallocated construction expense from the estimate. The balance of the Total Direct Cost (labeled "Field Cost" in the estimate summary sheet) is the direct cost of $5,468,000 for the CIP system (this figure includes a small amount for expansion of the plant instrument air system also).

13. The direct costs (materials, labor, and subcontracts) to modify the fermentation tanks for installation of new nozzles required for connection of ductwork includes costs for build and teardown of scaffolding in each tank, demolition of existing insulation, machine cutting of each tank, fabrication and installation of new nozzles, and post-weld passivation of the tank. These costs are taken from pages 15 and 16 of the main estimate and total $487,000.

14. The direct cost for an instrumentation system for control of tank foam over was taken from page 13 of the main Eichleay estimate. The materials cost of $514,800 for capacitance probes, actuated butterfly valves and switches to be installed on each tank was adjusted to include California sales tax and a 3% freight cost. Installation labor of $57,600 from page 13 was added to yield a total direct cost for this item of $629,000. Design basis for the system is presented in Eichleay drawing SK-30892-007 (see BACT Attachment E). Unit material costs are based on budgetary vendor's pricing obtained by Eichleay. Unit labor factors and costs are based on Eichleay's in-house estimating data.

15. The EPA model cost factor for foundations and supports is 8% of purchased equipment cost which in this case is applicable to only the control device and the knock out vessel. It thus does not factor in the costs of foundations for the substantial steel structures required for this project. Therefore, this cost was extracted from the Eichleay study and added as a direct cost in the estimate. Foundation design for the pipeway consists of drilled concrete piers for support of pipeway structures which require a minimal footprint

relative to conventional footers and for this reason are the standard approach for support under new steel columns when they are being installed in congested areas in existing industrial facilities. Direct costs (material + labor + subcontract) for concrete pier foundations have been extracted from page 5 of the estimate ($247,000) which covers drilling, rebar fabrication and setting, forming, pouring and finishing of the drilled piers. Estimated quantities are based on Eichleay plan drawing SK-30913-001 and the steel structure sections presented in Eichleay drawing SK-S12. The unit costs were based on Eichleay's historical experience with subcontract pricing for these items.

16. Construction Expense and Contractor's Fee have been included in the direct costs at 8% and 10 percent of all other direct costs respectively. These percentages reflect those used in the Eichleay study and are typical based on District Staff's experience. For comparison, Peters & Timmerhaus[6] recommend 10% and 7% for the items respectively.

17. Annual natural gas usage of 67,412 therms was estimated for the Gallo Livingston design by Eichleay (Appendix G of the Eichleay study) based on a 12 week season and 95% thermally efficient RTO's operating 50% of the time with an ethanol concentration of 6,034 ppm for 50% of the time and in hot standby the other 50% with allowance for startups. This natural gas usage will be used as the basis for the cost effectiveness calculations, factored as required for the thermal efficiency basis of the proposed control unit.

18. Long term natural gas price is assumed to be $8.00 per MMBtu

19. Power consumption for the Gallo facility is estimated by Eichleay at 586 kW (Appendix G of the Eichleay study). Since essentially all this power is consumed by the induced draft fans at the VOC control unit, this power basis will be assumed to be the same for the induced draft fans associated with all control technologies, factored down as required for control units not requiring combustion air.

20. Power consumption will be based on a 120 day crush season and a power cost of $0.11/kWh.

21. BACT Attachment D presents a tabulation of the utilities and other annual costs for each estimate case as well as the details of the basis and calculations.

22. Escalation has been applied at a rate of 3% per year where applicable.

23. Engineering cost and construction management costs have been included at 15% and 3% of the Total Direct Cost based on the percentages applied in the Eichleay Study. These percentages reflect those used in the Eichleay study and are typical based on District Staff's experience. A value of 15% for engineering is generally less than that recommended by Peters & Timmerhaus[7] who indicate engineering costs typically are in the range of 4-21% of Total Capital Investment with a median value of 13%.

24. Calculated VOC emission reductions will be debited for collateral NOx and VOC production from firing of natural gas where applicable based on 1 lb NOX = 1 lb VOC. For natural gas, emissions are based on 0.1 lb-NOx/MMBtu and 0.0055 lb-VOC/MMBtu

---

[6] Peters,Max and Klaus Timmerhaus, Plant Design and Economics for Chemical Engineers, McGraw-Hill, New York, 1968, p. 115.

[7] Peters,Max and Klaus Timmerhaus, Plant Design and Economics for Chemical Engineers, McGraw-Hill, New York, 1968, p. 115.

per AP-42. Calculated emissions from natural gas firing are presented in the following table:

Natural Gas Combustion Emissions					
Item	**Case 1 Thermal Ox**	**Case 2 RTO**	**Case 3 Refrigerated Condenser**	**Case 4 Water Scrubber**	**Case 5 Carbon Adsorption**
Natural Gas Combustion MMBtu/year	134,820	6,741	0	0	0
Annual NOx Emissions From Natural Gas tons-NOx/year	6.7	0.34	0	0	0
Annual VOC Emissions From Natural Gas tons-VOC/year	0.4	0.02	0	0	0
Total NOx + VOC from Natural Gas tons per year	**7.1**	**0.4**	**0**	**0**	**0**

25. Contingency has been included at 10% of the sum of Total Direct Cost and Total Indirect Cost. This value is given as typically 8-20% with an average of 10% by Peters and Timmerhaus[8]
26. Operating labor requirement was estimated one full time operator for all four VOC control systems with 3 shifts per day for the duration of the 120 day crush operation.
27. Maintenance labor requirement was estimated at 80 hours per week for all four control systems during a total of 20 weeks per year.
28. Operating and maintenance labor cost was included at $19.50/hour and $33.00 for year 2005 respectively per the Eichleay study and escalated at 4% to 2009.
29. Maintenance materials have been estimated at 3% of TCI. (Peters and Timmerhaus give a typical value of 6% for general process industries).
30. Total Capital Investment has been annualized based on a 10 year equipment life and a 10% opportunity cost for capital (CRF = 0.163).
31. Calculation of potential emissions from fermentation is based upon the red wine emission factor of 6.2 lb-ethanol per 1000 gallons of red wine and upon the maximum potential wine production capacity for the fermentation tanks. Maximum annual throughput capacity is calculated as follows:

[8] Peters, Max and Klaus D. Timmerhaus, Plant Design and Economics for Chemical Engineers, McGraw-Hill, New York, 1968, p.116.

Red crush season duration of 120 days

Five day batch processing period for red wine fermentation; maximum number of batches per season = 120 days/season ÷ 5 days/ batch = 24 batches per season

Total red wine fermenter volume in this estimate = 6,850,000 gallons

Maximum fill for red wine fermenter (due to foaming/expansion) = 80%

Maximum wine production capacity = working capacity of fermenters x # batches per season = 6,850,000 x 80% x 24 = 131,520,000 gallons per year

VOC Emissions = 131,520,000 gallons/year x 6.2 lb-VOC/1000 gallons

= 815,400 lb-VOC/year = **407.7 tons-VOC/year**

Cost Effectiveness Estimates

Table 1 presents the development of Total Capital Investment (TCI) for all capture and control cases based on the general facilities design prepared by Eichleay (including site specific costs and CIP) and Table 2 presents the associated annual costs, emission reductions, and cost effectiveness for each capture and control case.

EPA Cost Model

Table 1
Total Capital Investment for VOC Control of Red Wine Fermentation

	Case 1 Thermal Ox	Case 2 RTO	Case 3 Refrigerated Condenser	Case 4 Water Scrub	Case 5 Carbon Adsorption
Direct Costs					
Purchased Equipment Costs					
Control Device	$745,000	$1,854,000	$3,003,000	$396,000	$1,667,000
Knock Out Vessels	$148,000	$148,000	$148,000	$148,000	$148,000
Subtotal Equipment (A)	$893,000	$2,002,000	$3,151,000	$544,000	$1,815,000
Instrumentation (0.10 x A)	$89,000	$200,000	$315,000	$54,000	$182,000
Sales Tax (0.08 x A)	$71,000	$160,000	$252,000	$44,000	$145,000
Freight (0.05 x A)	$45,000	$100,000	$158,000	$27,000	$91,000
Purchased Equipment Cost (PEC)	$1,098,000	$2,462,000	$3,876,000	$669,000	$2,233,000
Direct Installation Costs for Purchased Equipment					
Foundations and Supports	$88,000	$197,000	$310,000	$54,000	$179,000
Handling & Erection	$154,000	$345,000	$543,000	$94,000	$313,000
Electrical	$44,000	$98,000	$155,000	$27,000	$89,000
Piping	$22,000	$49,000	$78,000	$13,000	$45,000
Direct Costs Not Included Above					
Structural Steel Pipeway	$2,727,000	$2,727,000	$2,727,000	$2,727,000	$2,727,000
Ductwork	$2,167,000	$2,167,000	$2,167,000	$971,000	$971,000
Pipeway Foundations	$247,000	$247,000	$247,000	$247,000	$247,000
Site Prep	$1,254,000	$1,254,000	$1,254,000	$1,254,000	$1,254,000
CIP System	$5,468,000	$5,468,000	$5,468,000	$5,468,000	$5,468,000
Electrical Utility	$391,000	$391,000	$391,000	$391,000	$391,000
Tank Modifications	$487,000	$487,000	$487,000	$487,000	$487,000
Foam Over Control System	$629,000	$629,000	$629,000	$629,000	$629,000
Heavy Lift Equipment	$1,192,000	$1,192,000	$1,192,000	$1,192,000	$1,192,000
Subtotal	$15,968,000	$17,713,000	$19,524,000	$14,223,000	$16,225,000
Construction Expense	$1,277,000	$1,417,040	$1,561,920	$1,137,840	$1,298,000
Contractor's Fee	$1,597,000	$1,771,300	$1,952,400	$1,422,300	$1,622,500
Total Direct Costs	$18,842,000	$20,901,340	$23,038,320	$16,783,140	$19,145,500
Indirect Costs					
Engineering	$2,826,000	$3,135,000	$3,456,000	$2,517,000	$2,872,000
Construction Management Expense	$565,000	$627,000	$691,000	$503,000	$574,000
Start Up	$22,000	$49,000	$78,000	$13,000	$45,000
Performance Test	$11,000	$25,000	$39,000	$7,000	$22,000
Contingencies	$2,227,000	$2,474,000	$2,730,000	$1,982,000	$2,266,000
Total Indirect Costs	$5,651,000	$6,310,000	$6,994,000	$5,022,000	$5,779,000
Total Capital Investment	**$21,619,000**	**$24,023,000**	**$26,518,000**	**$19,245,000**	**$22,004,000**

EPA Cost Model

Table 2
Annual Costs for VOC Control of Red Wine Fermentation

Control Device	Case 1 Thermal Ox	Case 2 RTO	Case 3 Refrigerated Cond.	Case 4 Water Scrubber	Case 5 Carbon Adsorption
Total Capital Investment	$21,619,000	$24,023,000	$26,518,000	$19,245,000	$22,004,000
Direct Annual Costs					
Labor & Materials					
Operating Labor (.5 hr/shift-unit @ $22.81/hour)	$65,700	$65,700	$65,700	$65,700	$65,700
Supervisor (15% of operator cost)	$9,900	$9,900	$9,900	$9,900	$9,900
Operating Materials (15% of total maintenance cost)	$104,700	$112,500	$123,700	$91,000	$103,400
Maintenance Labor (0.5 hr/shift-unit@ $38.60/hour)	$49,400	$29,200	$29,200	$29,200	$29,200
Maintenance Materials (3% of TCI)	$648,600	$720,700	$795,500	$577,400	$660,100
Utilities	$1,263,600	$239,500	$399,600	$2,194,400	$407,200
Total Direct Annual Cost	**$2,141,900**	**$1,177,500**	**$1,423,600**	**$2,967,600**	**$1,275,500**
Indirect Annual Costs					
Overhead (60% of labor & Mat'ls)	$527,000	$562,800	$614,400	$463,900	$521,000
Administrative Charges (2% of TCI)	$432,400	$480,500	$530,400	$384,900	$440,100
Property Taxes (2% TCI)	$432,400	$480,500	$530,400	$384,900	$440,100
Insurance (1% TCI)	$216,200	$240,200	$265,200	$192,500	$220,000
Capital Recovery (CRF = 0.163)	$3,523,900	$3,915,700	$4,322,400	$3,136,900	$3,586,700
Total Indirect Annual Cost	**$5,131,900**	**$5,679,700**	**$6,262,800**	**$4,563,100**	**$5,207,900**
Total Annualized Cost	**$7,273,800**	**$6,857,200**	**$7,686,400**	**$7,530,700**	**$6,483,400**
Emission Reductions					
Uncontrolled Emissions tpy	407.70	407.70	407.70	407.70	407.70
Collection & Control Efficiency	88%	88%	81%	81%	86%
Annual Emission Reduction tpy	358.78	358.78	330.24	330.24	350.62
Natural Gas Emissions tpy	7.11	0.36	0.00	0.00	0.00
Net Emission Reduction tpy	351.67	358.42	330.24	330.24	350.62
Cost Effectiveness $/ton	**$20,700**	**$19,100**	**$23,300**	**$22,800**	**$18,500**

Step 5 – Select BACT

As estimated in Tables 1 and 2, the cost effectiveness of all technologies evaluated lie between $18,500 and $23,300 per ton. As discussed previously, since the evaluation basis for this determination was the control of emissions from large red wine fermenters it may be inferred that the calculated values are significantly lower than that which would be evaluated for white wine fermenters due to the lower emission factor and lower potential wine production rate for white wine fermentation tanks. In addition, since this study evaluated emission controls on what is currently the largest red wine fermentation plant in the world, the results are applicable to fermentation tanks of all sizes due to 1) wineries with smaller tanks will be less cost effective due to increasing redundancy and/or loss of economies of scale and 2) proposed new wineries with a capacity equal to or exceeding Gallo-Livingston would be less cost effective since, due to market considerations which are currently driving the industry toward smaller fermentation batches of more premium wine, a new fermentation facility would most likely be configured with a larger number of smaller tanks and a corresponding greater number of VOC control systems per gallon of capacity. Therefore, the evaluated cost effectiveness values above represent the low end of the range of cost effectiveness and any direct evaluation of the Mission Bell facility is expected to yield a value which is significantly higher than those above.

The lowest evaluated cost effectiveness of $18,500 per ton exceeds the District's cost effectiveness threshold of $17,500 per ton for VOC. Therefore, since all Technologically Feasible BACT options have been demonstrated to not be cost effective, the fermentation tanks for Mission Bell Winery will be permitted for operation with Achieved-in-Practice BACT (operation with open top tank and a maximum average fermentation temperature of 95 ^{0}F).

Attachments:

BACT Attachment A:	Equipment List for Permit Units
BACT Attachment B:	Eichleay Estimates for Fermentation Controls at Gallo Livingston
BACT Attachment C:	Sizing and Purchase Costs for Control Devices
BACT Attachment D:	Utilities and other Annual Costs
BACT Attachment E:	Eichleay Drawings

BACT 5.4.14 Attachment A

Eichleay Estimates for Fermentation Controls at Gallo Livingston

Eichleay Engineers Inc. of California

ESTIMATE SUMMARY SHEET

Client Name: Wine Institute | Estimated By: P.H.M.

Job Number: 30913 | PRELIMINARY ESTIMATE | Checked By: R.H.

Job Title: Fermenter VOC Emissions - Livingston West Side Fermenters | Rev. 2 | Date: 6/24/05

CODE	ITEM DESCRIPTION	TOTAL COSTS RTO-1	RTO-2	RTO-3	RTO-4	GRAND TOTAL
	SUMMARY					
2.00	Site Construction	$1,253,680	$5,450	$5,450	$5,450	$1,270,030
3.00	Concrete	$208,450	$81,500	$85,500	$69,500	$444,950
4.00	Masonry					$0
5.00	Metals	$1,499,010	$395,028	$361,670	$275,846	$2,531,554
6.00	Wood & Plastics					$0
7.00	Thermal & Moisture Protection					$0
8.00	Door & Windows					$0
9.00	Finishes					$0
10.00	Specialties	$8,620	$0	$0	$0	$8,620
11.00	Equipment					$0
12.00	Furnishings					$0
13.00	Special Construction					$0
14.00	Conveying Systems					$0
15.00	Mechanical HVAC & Plumbing					$0
16.00	Electrical	$116,439	$28,212	$27,326	$32,226	$204,203
17.00	Instruments & Controls	$340,195	$199,195	$199,195	$199,195	$937,780
18.00	Process Piping & Equipment	$1,553,959	$1,572,913	$1,438,695	$1,361,843	$5,927,410
	Sub Total	$4,980,353	$2,282,298	$2,117,836	$1,944,060	$11,324,547
	Tax & Freight	282,779	125,680	113,112	106,828	$628,398
	General Conditions	$421,051	$192,638	$178,476	$164,071	$956,236
	General Contractor Mark-Up	$478,373	$220,042	$204,924	$187,479	$1,090,818
	Field Costs - Sub Total	$6,162,556	$2,820,657	$2,614,348	$2,402,438	$13,999,999
	Design Fee Allowance	924,383	423,099	392,152	360,366	$2,100,000
	Construction Management Allowance	$184,877	$84,620	$78,430	$72,073	$420,000
	Plan Check & Permit Fee Allowance	$21,843	$9,708	$8,737	$8,252	$48,539
	Third Party Inspection Allowance	$16,382	$7,281	$6,553	$6,189	$36,404
	Escalation	$281,415	$131,806	$125,029	$119,047	$657,297
	Project Contingency	$2,070,463	$920,206	$828,185	$782,175	$4,601,028
	Sub Total	$9,661,919	$4,397,375	$4,053,435	$3,750,538	$21,863,267
	Owners Costs	$92,438	$42,310	$39,215	$36,037	$210,000
	Round Off	-$357	$315	$350	$425	$733
	GRAND TOTAL	$9,754,000	$4,440,000	$4,093,000	$3,787,000	$22,074,000

Prepared By: [signature]
Date: 6/24/05

Approved By [signature]
Date: 6/24/05

Eichleay Engineers Inc. of California

ESTIMATE SUMMARY SHEET

Client Name: Wine Institute | Estimated By: P.H.M.

Job Number: 30913 | PRELIMINARY ESTIMATE | Checked By: R.H.

Job Title: Fermenter VOC Emissions - Livingston West Side Fermenters | Rev. 2 | Date: 6/24/05

W/O ESCALATION & OWNERS COSTS

CODE	ITEM DESCRIPTION	TOTAL COSTS RTO-1	RTO-2	RTO-3	RTO-4	GRAND TOTAL
	SUMMARY					
2.00	Site Construction	$1,253,680	$5,450	$5,450	$5,450	$1,270,030
3.00	Concrete	$208,450	$81,500	$85,500	$69,500	$444,950
4.00	Masonry					$0
5.00	Metals	$1,499,010	$395,028	$361,670	$275,846	$2,531,554
6.00	Wood & Plastics					$0
7.00	Thermal & Moisture Protection					$0
8.00	Door & Windows					$0
9.00	Finishes					$0
10.00	Specialties	$8,620	$0	$0	$0	$8,620
11.00	Equipment					$0
12.00	Furnishings					$0
13.00	Special Construction					$0
14.00	Conveying Systems					$0
15.00	Mechanical HVAC & Plumbing					$0
16.00	Electrical	$116,439	$28,212	$27,326	$32,226	$204,203
17.00	Instruments & Controls	$340,195	$199,195	$199,195	$199,195	$937,780
18.00	Process Piping & Equipment	$1,553,959	$1,572,913	$1,438,695	$1,361,843	$5,927,410
	Sub Total	$4,980,353	$2,282,298	$2,117,836	$1,944,080	$11,324,547
	Tax & Freight	282,779	125,680	113,112	106,828	$628,398
	General Conditions	$421,051	$192,638	$178,476	$164,071	$956,236
	General Contractor Mark-Up	$478,373	$220,042	$204,924	$187,479	$1,090,818
	Field Costs - Sub Total	$6,162,556	$2,820,657	$2,614,348	$2,402,438	$13,999,999
	Design Fee Allowance	924,383	423,099	392,152	360,366	$2,100,000
	Construction Management Allowance	$184,877	$84,620	$78,430	$72,073	$420,000
	Plan Check & Permit Fee Allowance	$21,843	$9,708	$8,737	$8,252	$48,539
	Third Party Inspection Allowance	$16,382	$7,281	$6,553	$6,189	$36,404
	Escalation					$0
	Project Contingency	$2,070,463	$920,206	$828,185	$782,175	$4,601,028
	Sub Total	$9,380,504	$4,265,569	$3,928,405	$3,631,491	$21,205,969
	Owners Costs					$0
	Round Off	$31				$31
	GRAND TOTAL	$9,380,535	$4,265,569	$3,928,405	$3,631,491	$21,206,000

Prepared By: [signature]
Date: 6/24/05

Approved By R.N. Dedger
Date: 6/24/05

Eichleay Engineers Inc. of California

ESTIMATE SUMMARY SHEET

Client Name: Wine Institute — **Estimated By:** P.H.M.

Job Number: 30913 — PRELIMINARY ESTIMATE — **Checked By:** R.H.

Job Title: Fermenter VOC Emissions - Livingston West Side Fermenters — **Rev.** 2 **Date:** 6/24/05

W/O Escalation & Owners Costs

CODE	ITEM DESCRIPTION	TOTAL MHRS	TOTAL COSTS LABOR	TOTAL COSTS MAT'L	TOTAL COSTS SUBCON.	TOTAL
	SUMMARY					
2.00	Site Construction		$0	$0	$1,270,030	$1,270,030
3.00	Concrete		$0	$0	$444,950	$444,950
4.00	Masonry		$0	$0	$0	$0
5.00	Metals		$711,959	$1,779,595	$40,000	$2,531,554
6.00	Wood & Plastics		$0	$0	$0	$0
7.00	Thermal & Moisture Protection		$0	$0	$0	$0
8.00	Door & Windows		$0	$0	$0	$0
9.00	Finishes		$0	$0	$0	$0
10.00	Specialties		$260	$0	$8,360	$8,620
11.00	Equipment		$0	$0	$0	$0
12.00	Furnishings		$0	$0	$0	$0
13.00	Special Construction		$0	$0	$0	$0
14.00	Conveying Systems		$0	$0	$0	$0
15.00	Mechanical HVAC & Plumbing		$0	$0	$0	$0
16.00	Electrical		$65,016	$85,787	$53,400	$204,203
17.00	Instruments & Controls		$140,550	$672,230	$125,000	$937,780
18.00	Process Piping & Equipment		$1,555,068	$3,175,093	$1,197,250	$5,927,411
	Sub Total		$2,472,863	$5,712,705	$3,138,990	$11,324,548
	Tax & Freight (11%)					$628,398
	General Conditions (8%)					$956,236
	General Contractor Mark-Up (10%)					$1,090,818
	Field Costs - Sub Total					$13,999,999
	Design Fee Allowance (15%)					$2,100,000
	Construction Management Allowance (3%)					$420,000
	Plan Check & Permit Fee Allowance (2%)					$48,539
	Third Party Inspection Allowance (1.5%)					$36,404
	Escalation					
	Project Contingency					$4,601,028
	Sub Total					$21,205,970
	Owners Costs					$0
	Round Off					$30
	GRAND TOTAL					$21,206,000

Prepared By: _____ Date: 6/24/05

Approved By R.V. Hedges Date: 6/24/05

Eichler
Engineers Inc. of CA

Client Name: Wine Institute
Job Number: 30913
Job Title: Fermenter VOC Emissions - Livingston West Side Fermenters

PRELIMINARY ESTIMATE

Estimated By: P.H.M.
Checked By: R.H.
Rev. 2 **Date:** 6/24/05

O:\30913\5.0 Design Documents\Estimates\Rev. 2\Living

CODE	ITEM DESCRIPTION	QUANT	UNIT	MHR/ UNIT	TOTAL MHRS	UNIT COSTS $ / Hr	UNIT COSTS MAT'L	UNIT COSTS SUBCON.	UNIT COSTS TOTAL	TOTAL COSTS LABOR	TOTAL COSTS MAT'L	TOTAL COSTS SUBCON.	TOTAL
	020 - Site Construction												
1	Excavation allowance for voc-1		cy					50.00	50.00				
2	Excavation allowance for voc-2	109	cy					50.00	50.00			5,450	5,450
3	Excavation allowance for voc-3	109	cy					50.00	50.00			5,450	5,450
4	Excavation allowance for voc-4	109	cy					50.00	50.00			5,450	5,450
1	Install and compact clean fill for VOC area	25000	cy					35.00	35.00			875,000	875,000
1	Allowance to demo road	1780	sy					6.00	6.00			10,680	10,680
1	Install asphalt in new expanded area	92000	sf					4.00	4.00			368,000	368,000
	including road												
	TOTAL - Site Construction											1,270,030	1,270,030

Eichl. y
Engineers Inc. of CA

Client Name: Wine Institute
Job Number: 30913
Job Title: Fermenter VOC Emissions - Livingston West Side Fermenters

PRELIMINARY ESTIMATE

Estimated By: P.H.M.
Checked By: R.H.
Rev. 2 **Date:** 6/24/05

O:\30913\5.0 Design Documents\Estimates\Rev. 2\Livin

CODE	ITEM DESCRIPTION	QUANT	UNIT	MHR/ UNIT	TOTAL MHRS	UNIT COSTS $ / Hr	UNIT COSTS MAT'L	UNIT COSTS SUBCON.	UNIT COSTS TOTAL	TOTAL COSTS LABOR	TOTAL COSTS MAT'L	TOTAL COSTS SUBCON.	TOTAL
	030 - Concrete												
	VOC -1 Duct sections												
1	Install drilled piers (20) rack #1	20	ea					1,000.00	1,000.00			20,000	20,000
1	Install drilled piers (20) rack #2	20	ea					1,000.00	1,000.00			20,000	20,000
1	Install drilled piers (42) for main rack inside plant	42	ea					1,500.00	1,500.00			63,000	63,000
1	Install drilled piers (46) for main rack outside plant	46	ea					700.00	700.00			32,200	32,200
1	Install drilled piers (32) for main rack by VOC's	32	ea					700.00	700.00			22,400	22,400
1	Install foundation for VOC-1 & tank	110	cy					450.00	450.00			49,500	49,500
	VOC -2 Duct sections												
2	Install drilled piers (16) rack #3	16	ea					1,000.00	1,000.00			16,000	16,000
2	Install drilled piers (18) rack #4	16	ea					1,000.00	1,000.00			16,000	16,000
2	Install foundation for VOC-1 & tank	110	cy					450.00	450.00			49,500	49,500
	VOC -3 Duct sections												
3	Install drilled piers (16) rack #6	16	ea					1,000.00	1,000.00			16,000	16,000
3	Install drilled piers (20) rack #7	20	ea					1,000.00	1,000.00			20,000	20,000
3	Install foundation for VOC-1 & tank	110	cy					450.00	450.00			49,500	49,500
	VOC -4 Duct sections												
4	Install drilled piers (0) rack #4		ea					1,000.00	1,000.00				
4	Install drilled piers (20) rack #5	20	ea					1,000.00	1,000.00			20,000	20,000
4	Install foundation for VOC-1 & tank	110	cy					450.00	450.00			49,500	49,500
	Allowance for building pad	3	cy					450.00	450.00			1,350	1,350
	TOTAL - Concrete											444,950	444,950

Eichler
Engineers Inc. of CA.

Client Name: Wine Institute
Job Number: 30913
Job Title: Fermenter VOC Emissions - Livingston West Side Fermenters

PRELIMINARY ESTIMATE

Estimated By: P.H.M.
Checked By: R.H.
Rev. 2 **Date:** 6/24/05

CODE	ITEM DESCRIPTION	QUANT	UNIT	MHR/ UNIT	TOTAL MHRS	UNIT COSTS $ / Hr	UNIT COSTS MAT'L	UNIT COSTS SUBCON.	UNIT COSTS TOTAL	TOTAL COSTS LABOR	TOTAL COSTS MAT'L	TOTAL COSTS SUBCON.	TOTAL
	050 - Metals												
	VOC -1 Duct Section												
1	Fab & install main duct rack frames (inside unit - 45 ft)	21	ea	20	420	65.00	6,500.00		7,800.00	27,300	136,500		163,800
1	Fab & install main duct rack top connection members	640	ft	0.75	480	65.00	45.00		93.75	31,200	28,800		60,000
1	Fab & install main duct rack bottom connection members	640	ft	0.75	480	65.00	45.00		93.75	31,200	28,800		60,000
1	Fab & install main duct rack top cross bracing	80	ea	6	480	65.00	690.00		1,080.00	31,200	55,200		86,400
1	Fab & install main duct rack lower cross bracing	40	ea	6	240	65.00	950.00		1,340.00	15,600	38,000		53,600
1	Fab & install main duct rack frames (outside unit - 25 ft)	23	ea	10	230	65.00	4,420.00		5,070.00	14,950	101,660		116,610
1	Fab & install main duct rack top connection members	680	ft	0.5	340	65.00	45.00		77.50	22,100	30,600		52,700
1	Fab & install main duct rack top cross bracing	92	ea	4	368	65.00	600.00		860.00	23,920	55,200		79,120
1	Fab & install main duct rack lower cross bracing	22	ea	4	88	65.00	700.00		960.00	5,720	15,400		21,120
1	Fab & install main duct rack frames (VOC area)	16	ea	4	64	65.00	1,430.00		1,690.00	4,160	22,880		27,040
1	3' wide grating on main rack	2700	sf	0.15	405	65.00	19.00		28.75	26,325	51,300		77,625
1	handrails	1800	lf	0.3	540	65.00	75.00		94.50	35,100	135,000		170,100
1	Allowance for grating from main rack to existing catwalks	1	lot	50	50	65.00	5,000.00		8,250.00	3,250	5,000		8,250
1	Allowance for caged ladders	200	ft	0.5	100	65.00	50.00		82.50	6,500	10,000		16,500
1	15 x 8 towers	5	ea	80	400	65.00	14,000.00		19,200.00	26,000	70,000		96,000
1	15' top level connection beams	8	ea	8	64	65.00	550.00		1,070.00	4,160	4,400		8,560
1	cross bracing on top open sections	4	ea	8	32	65.00	300.00		820.00	2,080	1,200		3,280
1	15 x 15 towers	5	ea	80	400	65.00	18,000.00		23,200.00	26,000	90,000		116,000
1	15' top level connection beams	8	ea	8	64	65.00	550.00		1,070.00	4,160	4,400		8,560
1	cross bracing on top open sections	4	ea	8	32	65.00	300.00		820.00	2,080	1,200		3,280
1	3' wide grating on walkway 1 & 2	810	sf	0.15	121.5	65.00	19.00		28.75	7,898	15,390		23,288
1	3' wide grating to tanks	510	sf	0.15	76.5	65.00	19.00		28.75	4,973	9,690		14,663
1	handrails	920	lf	0.3	276	65.00	75.00		94.50	17,940	69,000		86,940
1	grating to existing catwalks	120	sf	0.15	18	65.00	19.00		28.75	1,170	2,280		3,450

Eichleay Engineers Inc. of CA

Client Name: Wine Institute
Job Number: 30913
Job Title: Fermenter VOC Emissions - Livingston West Side Fermenters

PRELIMINARY ESTIMATE

Estimated By: P.H.M.
Checked By: R.H.
Rev. 2 **Date:** 6/24/05

CODE	ITEM DESCRIPTION	QUANT	UNIT	MHR/ UNIT	TOTAL MHRS	UNIT COSTS $ / Hr	UNIT COSTS MAT'L	UNIT COSTS SUBCON.	UNIT COSTS TOTAL	TOTAL COSTS LABOR	TOTAL COSTS MAT'L	TOTAL COSTS SUBCON.	TOTAL
	VOC-2 Duct Section												
2	15 x 15 towers	4	ea	20	80	65.00	20,000.00		21,300.00	5,200	80,000		85,200
2	20' top level connection beams	6	ea	2	12	65.00	700.00		830.00	780	4,200		4,980
2	cross bracing on top open sections	3	ea	2	6	65.00	400.00		530.00	390	1,200		1,590
2	15 x 15 towers	3	ea	20	60	65.00	20,000.00		21,300.00	3,900	60,000		63,900
2	15' top level connection beams	4	ea	2	8	65.00	550.00		680.00	520	2,200		2,720
2	cross bracing on top open sections	2	ea	2	4	65.00	300.00		430.00	260	600		860
2	15 x 20 towers - shared vertical colums	2	ea	20	40	65.00	20,000.00		21,300.00	2,600	40,000		42,600
2	15 x 15 tower	1	ea	20	20	65.00	10,000.00		11,300.00	1,300	10,000		11,300
2	3' wide grating on walkway 3, 4' wide on walkway 4	945	sf	0.15	141.75	65.00	19.00		28.75	9,214	17,955		27,169
2	3' wide grating to tanks	360	sf	0.15	54	65.00	19.00		28.75	3,510	6,840		10,350
2	handrails	820	lf	0.3	246	65.00	75.00		94.50	15,990	61,500		77,490
2	grating to existing catwalks	165	sf	0.15	24.75	65.00	19.00		28.75	1,609	3,135		4,744
	VOC-3 Duct Section												
3	20 x 8 towers	3	ea	20	60	65.00	15,000.00		16,300.00	3,900	45,000		48,900
3	20' top level connection beams	6	ea	2	12	65.00	700.00		830.00	780	4,200		4,980
3	cross bracing on top open sections	3	ea	2	6	65.00	400.00		530.00	390	1,200		1,590
3	15 x 8 towers	1	ea	20	20	65.00	14,000.00		15,300.00	1,300	14,000		15,300
3	15 x 15 towers	5	ea	20	100	65.00	18,000.00		19,300.00	6,500	90,000		96,500
3	15' top level connection beams	8	ea	2	16	65.00	550.00		680.00	1,040	4,400		5,440
3	cross bracing on top open sections	4	ea	2	8	65.00	300.00		430.00	520	1,200		1,720
3	3' wide grating on walkway 6 & 7	810	sf	0.15	121.5	65.00	19.00		28.75	7,898	15,390		23,288
3	3' wide grating to tanks	510	sf	0.15	76.5	65.00	19.00		28.75	4,973	9,690		14,663
3	handrails	920	lf	0.3	276	65.00	75.00		94.50	17,940	69,000		86,940
3	grating to existing catwalks	60	sf	0.15	9	65.00	19.00		28.75	585	1,140		1,725

Eichle
Engineers Inc. of CA

Client Name: Wine Institute
Job Number: 30913
Job Title: Fermenter VOC Emissions - Livingston West Side Fermenters

PRELIMINARY ESTIMATE

Estimated By: P.H.M.
Checked By: R.H.
Rev. 2 **Date:** 6/24/05

CODE	ITEM DESCRIPTION	QUANT	UNIT	MHR/ UNIT	TOTAL MHRS	UNIT COSTS $ / Hr	UNIT COSTS MAT'L	UNIT COSTS SUBCON.	UNIT COSTS TOTAL	TOTAL COSTS LABOR	TOTAL COSTS MAT'L	TOTAL COSTS SUBCON.	TOTAL
	VOC-4 Duct Section												
4	15 x 15 towers	5	ea	20	100	65.00	18,000.00		19,300.00	6,500	90,000		96,500
4	15' top level connection beams	8	ea	2	16	65.00	550.00		680.00	1,040	4,400		5,440
4	cross bracing on top open sections	4	ea	2	8	65.00	300.00		430.00	520	1,200		1,720
4	shared end section with voc-2	1	ea	40	40	65.00	10,000.00		12,600.00	2,600	10,000		12,600
4	3' wide grating on walkway 7	405	sf	0.15	60.75	65.00	19.00		28.75	3,949	7,695		11,644
4	3' wide grating to tanks	450	sf	0.15	67.5	65.00	19.00		28.75	4,388	8,550		12,938
4	handrails	840	lf	0.3	252	65.00	75.00		94.50	16,380	63,000		79,380
ALL	Allowance for additional supports & grating	1	lot	500	500	65.00	70,000.00		102,500	32,500	70,000		102,500
1	Crane to install main rack outside plant area	3	wks					2,000.00	2,000.00			6,000	6,000
1	(40 ton)	1	lot	120	120	75.00			9,000.00	9,000			9,000
1	Allowance for small cranes to position steel (3)	6	mo	160	960	75.00		2,000.00	14,000.00	72,000		12,000	84,000
2	Allowance for small cranes to position steel (2)	2	mo	160	320	75.00		2,000.00	14,000.00	24,000		4,000	28,000
3	Allowance for small cranes to position steel (2)	2	mo	160	320	75.00		2,000.00	14,000.00	24,000		4,000	28,000
4	Allowance for small cranes to position steel (2)	2	mo	160	320	75.00		2,000.00	14,000.00	24,000		4,000	28,000
ALL	allowance for overtime to build structures	1	lot	1000	1000	25.00			25,000.00	25,000			25,000
	to work around helicopter usage												
ALL	Allowance to touch up paint	1	lot					10,000.00	10,000.00			10,000	10,000
	TOTAL - Metals				11255					711,959	1,779,595	40,000	2,531,554

Eichler
Engineers Inc. of CA

Client Name: Wine Institute
Job Number: 30913
Job Title: Fermenter VOC Emissions - Livingston West Side Fermenters

PRELIMINARY ESTIMATE

Estimated By: P.H.M.
Checked By: R.H.
Rev. 2 Date: 6/24/05
O:\30913\5.0 Design Documents\Estimates\Rev. 2\Living

CODE	ITEM DESCRIPTION	QUANT	UNIT	MHR/ UNIT	TOTAL MHRS	UNIT COSTS $ / Hr	UNIT COSTS MAT'L	UNIT COSTS SUBCON.	UNIT COSTS TOTAL	TOTAL COSTS LABOR	TOTAL COSTS MAT'L	TOTAL COSTS SUBCON.	TOTAL
	010 - Specialties												
1	Alowance for modular structure for operator	96	sf					85.00	85.00			8,160	8,160
	at the VOC units												
1	Allowance to set in place & tie down	1	lot	4	4	65.00		200.00	460.00	260		200	460
	TOTAL - Specialties				4					260		8,360	8,620

Eichl... Engineers Inc. of CA

Client Name: Wine Institute
Job Number: 30913
Job Title: Fermenter VOC Emissions - Livingston West Side Fermenters

PRELIMINARY ESTIMATE

Estimated By: P.H.M.
Checked By: R.H.
Rev. 2 **Date:** 6/24/05

CODE	ITEM DESCRIPTION	QUANT	UNIT	MHR/ UNIT	TOTAL MHRS	UNIT COSTS $ / Hr	UNIT COSTS MAT'L	UNIT COSTS SUBCON.	UNIT COSTS TOTAL	TOTAL COSTS LABOR	TOTAL COSTS MAT'L	TOTAL COSTS SUBCON.	TOTAL
	016 - Electrical												
	POWER DISTRIBUTION												
	VOC -1												
1	DISCONNECT SWITCH FUSABLE, 400A, 600V, 3PH, 3W	1	EA	10	10	75.00	2,025.00		2,775.00	750	2,025		2,775
1	#600 MCM CONDUCTOR	1.2	CLF	6.154	7	75.00	475.00		936.55	554	570		1,124
1	#2 GROUND	5	CLF	1.778	9	75.00	47.00		180.35	667	235		902
1	3" RIGID ALUMINUM	40	LF	0.18	7	75.00	9.45		22.95	540	378		918
1	3" IN-LINE PULL FITTINGS	2	EA	2.7	5	75.00	415.00		617.50	405	830		1,235
1	16X16X6 PULL BOX	1	EA	6.15	6	75.00	810.00		1,271.25	461	810		1,271
1	3"90-DEGREE RGS,PVC COATED	2	EA	1.9	4	75.00	69.00		211.50	285	138		423
1	FUSE 400A	3	EA	0.333	1	75.00	130.00		154.98	75	390		465
1	3000A main switchboard	1	EA	28.57	29	75.00	4,675.00		6,817.75	2,143	4,675		6,818
1	3000A 600V CIRCUIT BREAKER	1	EA	36.36	36	75.00	24,300.00		27,027.00	2,727	24,300		27,027
1	BUS CIRCUIT BREAKER 400A 480V 3PH	1	EA	3	3	75.00	3,100.00		3,325.00	225	3,100		3,325
1	MISC SUPPORTS, FITTINGS, TERMINATIONS	1	LOT							1,766	7,490		9,257
1	CHECKOUT AND TESTING	1	LOT	100	100	75.00			7,500.00	7,500			7,500
	VOC -2												
2	DISCONNECT SWITCH FUSABLE, 600A, 600V, 3PH, 3W	1	EA	16	16	75.00	3,000.00		4,200.00	1,200	3,000		4,200
2	#600 MCM CONDUCTOR	2.4	CLF	7.3	18	75.00	585.00		1,132.50	1,314	1,404		2,718
2	#2 GROUND	5	CLF	1.778	9	75.00	47.00		180.35	667	235		902
2	3" RIGID ALUMINUM	80	LF	0.18	14	75.00	9.45		22.95	1,080	756		1,836
2	3" IN-LINE PULL FITTINGS	2	EA	2.7	5	75.00	415.00		617.50	405	830		1,235
2	16X16X6 PULL BOX	1	EA	6.15	6	75.00	810.00		1,271.25	461	810		1,271
2	3"90-DEGREE RGS,PVC COATED	2	EA	1.9	4	75.00	69.00		211.50	285	138		423
2	FUSE 400A	3	EA	0.333	1	75.00	150.00		174.98	75	450		525
2	BUS CIRCUIT BREAKER 400A 480V 3PH	1	EA	5	5	75.00	3,775.00		4,150.00	375	3,775		4,150
2	MISC SUPPORTS, FITTINGS, TERMINATIONS	1	LOT							1,172	2,280		3,452
2	CHECKOUT AND TESTING	1	LOT	100	100	75.00			7,500.00	7,500			7,500

Eichl / Engineers Inc. of CA

Client Name: Wine Institute
Job Number: 30913
Job Title: Fermenter VOC Emissions - Livingston West Side Fermenters

PRELIMINARY ESTIMATE

Estimated By: P.H.M.
Checked By: R.H.
Rev. 2 **Date:** 6/24/05

CODE	ITEM DESCRIPTION	QUANT	UNIT	MHR/ UNIT	TOTAL MHRS	UNIT COSTS $ / Hr	UNIT COSTS MAT'L	UNIT COSTS SUBCON.	UNIT COSTS TOTAL	TOTAL COSTS LABOR	TOTAL COSTS MAT'L	TOTAL COSTS SUBCON.	TOTAL
	VOC -3												
3	DISCONNECT SWITCH FUSABLE, 400A, 600V, 3PH, 3W	1	EA	10	10	75.00	2,025.00		2,775.00	750	2,025		2,775
3	#600 MCM CONDUCTOR	3.6	CLF	6.154	22	75.00	475.00		936.55	1,662	1,710		3,372
3	#2 GROUND	5	CLF	1.778	9	75.00	47.00		180.35	667	235		902
3	3" RIGID ALUMINUM	120	LF	0.18	22	75.00	9.45		22.95	1,620	1,134		2,754
3	3" IN-LINE PULL FITTINGS	2	EA	2.7	5	75.00	415.00		617.50	405	830		1,235
3	16X16X6 PULL BOX	1	EA	6.15	6	75.00	810.00		1,271.25	461	810		1,271
3	3"90-DEGREE RGS,PVC COATED	2	EA	1.9	4	75.00	69.00		211.50	285	138		423
3	FUSE 400A	3	EA	0.333	1	75.00	130.00		154.98	75	390		465
3	BUS CIRCUIT BREAKER 400A 480V 3PH	1	EA	3	3	75.00	3,100.00		3,325.00	225	3,100		3,325
3	MISC SUPPORTS, FITTINGS, TERMINATIONS	1	LOT							1,230	2,074		3,304
3	CHECKOUT AND TESTING	1	LOT	100	100	75.00			7,500.00	7,500			7,500
	VOC -4												
4	DISCONNECT SWITCH FUSABLE, 400A, 600V, 3PH, 3W	1	EA	10	10	75.00	2,025.00		2,775.00	750	2,025		2,775
4	#600 MCM CONDUCTOR	6	CLF	6.154	37	75.00	475.00		936.55	2,769	2,850		5,619
4	#2 GROUND	5	CLF	1.778	9	75.00	47.00		180.35	667	235		902
4	3" RIGID ALUMINUM	200	LF	0.18	36	75.00	9.45		22.95	2,700	1,890		4,590
4	3" IN-LINE PULL FITTINGS	2	EA	2.7	5	75.00	415.00		617.50	405	830		1,235
4	16X16X6 PULL BOX	1	EA	6.15	6	75.00	810.00		1,271.25	461	810		1,271
4	3"90-DEGREE RGS,PVC COATED	2	EA	1.9	4	75.00	69.00		211.50	285	138		423
4	FUSE 400A	3	EA	0.333	1	75.00	130.00		154.98	75	390		465
4	BUS CIRCUIT BREAKER 400A 480V 3PH	1	EA	3	3	75.00	3,100.00		3,325.00	225	3,100		3,325
4	MISC SUPPORTS, FITTINGS, TERMINATIONS	1	LOT							1,667	2,454		4,121
4	CHECKOUT AND TESTING	1	LOT	100	100	75.00			7,500.00	7,500			7,500

Eichle
Engineers Inc. of CA

Client Name: Wine Institute
Job Number: 30913
Job Title: Fermenter VOC Emissions - Livingston West Side Fermenters

PRELIMINARY ESTIMATE

Estimated By: P.H.M.
Checked By: R.H.
Rev. 2 Date: 6/24/05

CODE	ITEM DESCRIPTION	QUANT	UNIT	MHR/ UNIT	TOTAL MHRS	UNIT COSTS $ / Hr	UNIT COSTS MAT'L	UNIT COSTS SUBCON.	UNIT COSTS TOTAL	TOTAL COSTS LABOR	TOTAL COSTS MAT'L	TOTAL COSTS SUBCON.	TOTAL
1	Allowance for installing lighting at VOC areas	1	lot					40,000.00	40,000.00			40,000	40,000
1	Allowance for installing lighting on main duct	670	ft					20.00	20.00			13,400	13,400
	TOTAL - Electrical				789					65,016	85,787	53,400	204,203

Eichle
Engineers Inc. of CA

Client Name: Wine Institute
Job Number: 30913
Job Title: Fermenter VOC Emissions - Livingston West Side Fermenters

PRELIMINARY ESTIMATE

Estimated By: P.H.M.
Checked By: R.H.
Rev. 2 Date: 6/24/05

O:\30913\5.0 Design Documents\Estimates\Rev. 2\Living

CODE	ITEM DESCRIPTION	QUANT	UNIT	MHR/ UNIT	TOTAL MHRS	UNIT COSTS $ / Hr	UNIT COSTS MAT'L	UNIT COSTS SUBCON.	UNIT COSTS TOTAL	TOTAL COSTS LABOR	TOTAL COSTS MAT'L	TOTAL COSTS SUBCON.	TOTAL
	017 - Instruments & Controls												
ALL	Ethanol Analyzer (at RTO)	4	ea	16	64	75.00	20,000.00		21,200.00	4,800	80,000		84,800
ALL	Capacitance probe / transmitter	60	ea	4	240	75.00	1,200.00		1,500.00	18,000	72,000		90,000
ALL	Actuated BF vent valve - 12" fermenter	60	ea	4	240	75.00	6,500.00		6,800.00	18,000	390,000		408,000
ALL	Actuated BF vent valve - 36" KO pots	4	ea	8	32	75.00	10,000.00		10,600.00	2,400	40,000		42,400
ALL	Local hand switch for BF closing	64	ea	4	256	75.00	200.00		500.00	19,200	12,800		32,000
ALL	Relief Vent - KO pots	4	ea	4	16	75.00	3,000.00		3,300.00	1,200	12,000		13,200
	Level transmitter & Indicator					75.00	1,200.00		1,200.00				
ALL	High level switch	4	ea	4	16	75.00	750.00		1,050.00	1,200	3,000		4,200
ALL	Low level switch	4	ea	4	16	75.00	750.00		1,050.00	1,200	3,000		4,200
ALL	Level gauge	4	ea	2	8	75.00	1,000.00		1,150.00	600	4,000		4,600
ALL	Pressure gauge	16	ea	1	16	75.00	300.00		375.00	1,200	4,800		6,000
ALL	Pressure transmitter	4	ea	4	16	75.00	1,500.00		1,800.00	1,200	6,000		7,200
ALL	Temperature gauge w/ TW	16	ea	4	64	75.00	300.00		600.00	4,800	4,800		9,600
1	Temperature transmitter, RTD, TW	2	ea	4	8	75.00	1,200.00		1,500.00	600	2,400		3,000
	Relief valves						300.00		300.00				
	Pressure regulator - liquid						300.00		300.00				
	Pressure regulator - steam						1,500.00		1,500.00				
ALL	On- off control valve Stations	4		4	16	75.00	1,000.00		1,300.00	1,200	4,000		5,200
ALL	Conduit, factored 20' per tank	1200	ft	0.2	240	75.00	8.00		23.00	18,000	9,600		27,600
ALL	Conduit, factored 300' per RTO	1200	ft	0.2	240	75.00	8.00		23.00	18,000	9,600		27,600
ALL	Wire, factored 50' per instrument/valve	7300	ft	0.02	146	75.00	0.10		1.60	10,950	730		11,680
ALL	Allowance for air tubing	1	lot	240	240	75.00	500.00		18,500.00	18,000	500		18,500

Eichleay Engineers Inc. of CA

Client Name: Wine Institute
Job Number: 30913
Job Title: Fermenter VOC Emissions - Livingston West Side Fermenters

PRELIMINARY ESTIMATE

Estimated By: P.H.M.
Checked By: R.H.
Rev. 2 Date: 6/24/05

O:\30913\5.0 Design Documents\Estimates\Rev. 2\Livin

CODE	ITEM DESCRIPTION	QUANT	UNIT	MHR/ UNIT	TOTAL MHRS	UNIT COSTS $ / Hr	UNIT COSTS MAT'L	UNIT COSTS SUBCON.	UNIT COSTS TOTAL	TOTAL COSTS LABOR	TOTAL COSTS MAT'L	TOTAL COSTS SUBCON.	TOTAL
1	Install PC and software for monitoring system	1	lot				13,000		13,000		13,000		13,000
1	Software design, integration and testing	1	lot					100,000	100,000			100,000	100,000
1	Installation of network & system	1	lot					25,000	25,000			25,000	25,000
	TOTAL - Instruments & Controls				1874					140,550	672,230	125,000	937,780

Eichle... / Engineers Inc. of CA

Client Name: Wine Institute
Job Number: 30913
Job Title: Fermenter VOC Emissions - Livingston West Side Fermenters

PRELIMINARY ESTIMATE

Estimated By: P.H.M.
Checked By: R.H.
Rev. 2 **Date:** 6/24/05

CODE	ITEM DESCRIPTION	QUANT	UNIT	MHR/ UNIT	TOTAL MHRS	UNIT COSTS $ / Hr	UNIT COSTS MAT'L	UNIT COSTS SUBCON.	UNIT COSTS TOTAL	TOTAL COSTS LABOR	TOTAL COSTS MAT'L	TOTAL COSTS SUBCON.	TOTAL
	018 - Process Piping & Equipment												
	VOC Control Equipment												
1	VOC-1 16,000 scfm RTO unit	1	ea	200	200	65.00	416,000		429,000	13,000	416,000		429,000
2	VOC-2 22,000 scfm RTO unit	1	ea	250	250	65.00	503,000		519,250	16,250	503,000		519,250
3	VOC-3 13,000 scfm RTO unit	1	ea	200	200	65.00	367,000		380,000	13,000	367,000		380,000
4	VOC-4 13,000 scfm RTO unit	1	ea	200	200	65.00	367,000		380,000	13,000	367,000		380,000
all	Adder for RTO for higher SP blower & O2 control loop	4	ea				35,000.00		35,000.00		140,000		140,000
all	Allowance for stainless stack & alum. Grating & handrails	4	ea				15,000.00		15,000.00		60,000		60,000
	Install refractory in VOC's												
1	VOC-1	1	lot	80	80	70.00			5,600.00	5,600			5,600
2	VOC-2	1	lot	100	100	70.00			7,000.00	7,000			7,000
3	VOC-3	1	lot	80	80	70.00			5,600.00	5,600			5,600
4	VOC-4	1	lot	80	80	70.00			5,600.00	5,600			5,600
	Knock out vessels												
1	KO Vessel for VOC-1 - 5000 gal	1	ea	20	20	65.00	37,000.00		38,300.00	1,300	37,000		38,300
2	KO Vessel for VOC-2 - 7000 gal	1	ea	20	20	65.00	45,000.00		46,300.00	1,300	45,000		46,300
3	KO Vessel for VOC-3 - 4000 gal	1	ea	20	20	65.00	33,000.00		34,300.00	1,300	33,000		34,300
4	KO Vessel for VOC-4 - 4000 gal	1	ea	20	20	65.00	33,000.00		34,300.00	1,300	33,000		34,300
	Nozzle Fabrication/Installation at each tank												
all	12" Nozzle(Fabricate)	60	ea	4	240	65.00	215.00		475.00	15,600	12,900		28,500
all	Machine Cut Hole(Specialty Service)	60	ea	2	120	65.00	20.00	600.00	750.00	7,800	1,200	36,000	45,000
all	12" Nozzle(Install)	60	ea	4	240	65.00			260.00	15,600			15,600
all	2" Nozzle(Fabricate)	60	ea	1.5	90	65.00	40.00		137.50	5,850	2,400		8,250
all	Drill Hole W/Hole Saw Auger	60	ea	1	60	65.00			65.00	3,900			3,900
all	2" Nozzle(Install)	60	ea	3	180	65.00			195.00	11,700			11,700

Eichle

Engineers Inc. of CA

Client Name: Wine Institute
Job Number: 30913
Job Title: Fermenter VOC Emissions - Livingston West Side Fermenters

PRELIMINARY ESTIMATE

Estimated By: P.H.M.
Checked By: R.H.
Rev. 2 **Date:** 6/24/05

CODE	ITEM DESCRIPTION	QUANT	UNIT	MHR/ UNIT	TOTAL MHRS	UNIT COSTS $ / Hr	UNIT COSTS MAT'L	UNIT COSTS SUBCON.	UNIT COSTS TOTAL	TOTAL COSTS LABOR	TOTAL COSTS MAT'L	TOTAL COSTS SUBCON.	TOTAL
all	36" Nozzle(Fabricate)	60	ea	8	480	65.00	350.00		870.00	31,200	21,000		52,200
all	Machine Cut Hole(Specialty Service)	60	ea	4	240	65.00	20.00	600.00	880.00	15,600	1,200	36,000	52,800
all	36" Nozzle(Install)	60	ea	10	600	65.00			650.00	39,000			39,000
	Allowance for passivation												
all	Install gel	180	ea	4	720	65.00	150.00		410.00	46,800	27,000		73,800
all	neutralize & flush & dry	180	ea	2	360	65.00	20.00		150.00	23,400	3,600		27,000
all	Insulation Removal	60	ea	2	120	65.00			130.00	7,800			7,800
all	Scaffolding - 38' tanks(Install)	12	ea	24	288	65.00			1,560.00	18,720			18,720
ALL	Scaffolding - 24' to 28' tanks(Install)	48	ea	20	960	65.00			1,300.00	62,400			62,400
all	Scaffolding - 38' tanks(Remove)	12	ea	12	144	65.00			780.00	9,360			9,360
all	Scaffolding - 24' to 28' tanks(Remove)	48	ea	10	480	65.00			650.00	31,200			31,200
	Ducting Installation												
1	VOC-1												
1	10" Duct	36	ft				54.00		54.00		1,944		1,944
1	10" Duct misc. fittings	1	lot				800.00		800.00		800		800
1	Bolt up	10	ea	1.5	15	65.00			97.50	975			975
1	Handle	9	ea	2.08	18.72	65.00			135.20	1,217			1,217
1	Install	2	lot	2	4	65.00			130.00	260			260
1	12" Duct	40	ft				62.00		62.00		2,480		2,480
1	12" Duct misc. fittings	1	lot				1,000.00		1,000.00		1,000		1,000
1	Bolt up	12	ea	1.5	18	65.00			97.50	1,170			1,170
1	Handle	10	ea	2.08	20.8	65.00			135.20	1,352			1,352
1	Install	2	lot	2	4	65.00			130.00	260			260
1	16" Duct	24	ft				77.00		77.00		1,848		1,848
1	16" Duct misc. fittings	1	lot				2,000.00		2,000.00		2,000		2,000
1	Bolt up	8	ea	2	16	65.00			130.00	1,040			1,040

Eichle
Engineers Inc. of CA

Client Name: Wine Institute
Job Number: 30913
Job Title: Fermenter VOC Emissions - Livingston West Side Fermenters

PRELIMINARY ESTIMATE

Estimated By: P.H.M.
Checked By: R.H.
Rev. 2 **Date:** 6/24/05

CODE	ITEM DESCRIPTION	QUANT	UNIT	MHR/ UNIT	TOTAL MHRS	UNIT COSTS $ / Hr	UNIT COSTS MAT'L	UNIT COSTS SUBCON.	UNIT COSTS TOTAL	TOTAL COSTS LABOR	TOTAL COSTS MAT'L	TOTAL COSTS SUBCON.	TOTAL
1	Handle	6	ea	3	18	65.00			195.00	1,170			1,170
1	Install	2	lot	2	4	65.00			130.00	260			260
1	18" Duct	45	ft				86.00		86.00		3,870		3,870
1	18" Duct misc. fittings	1	lot				2,000.00		2,000.00		2,000		2,000
1	Bolt up	13	ea	3	39	65.00			195.00	2,535			2,535
1	Handle	11	ea	3.52	38.72	65.00			228.80	2,517			2,517
1	Install	3	lot	2	6	65.00			130.00	390			390
1	20" Duct	40	ft				92.00		92.00		3,680		3,680
1	20" Duct misc. fittings	1	lot				2,000.00		2,000.00		2,000		2,000
1	Bolt up	12	ea	4	48	65.00			260.00	3,120			3,120
1	Handle	10	ea	4.6	46	65.00			299.00	2,990			2,990
1	Install	3	lot	3	9	65.00			195.00	585			585
1	22" Duct	60	ft				99.00		99.00		5,940		5,940
1	22" Duct misc. fittings	1	lot				2,000.00		2,000.00		2,000		2,000
1	Bolt up	18	ea	4	72	65.00			260.00	4,680			4,680
1	Handle	16	ea	4.6	73.6	65.00			299.00	4,784			4,784
1	Install	4	lot	3	12	65.00			195.00	780			780
1	24" Duct	18	ft				106.00		106.00		1,908		1,908
1	24" Duct misc. fittings	1	lot				2,000.00		2,000.00		2,000		2,000
1	Bolt up	6	ea	4	24	65.00			260.00	1,560			1,560
1	Handle	5	ea	4.6	23	65.00			299.00	1,495			1,495
1	Install	1	lot	3	3	65.00			195.00	195			195
1	28" Duct	85	ft				119.00		119.00		10,115		10,115
1	28" Duct misc. fittings	1	lot				4,000.00		4,000.00		4,000		4,000
1	Bolt up	22	ea	5.5	121	65.00			357.50	7,865			7,865
1	Handle	21	ea	5.32	111.72	65.00			345.80	7,262			7,262
1	Install	5	lot	3	15	65.00			195.00	975			975
1	36" Duct	385	ft				199.00		199.00		76,615		76,615
1	36" Duct misc. fittings	1	lot				20,000.00		20,000.00		20,000		20,000

Eichl y
Engineers Inc. of CA

Client Name: Wine Institute
Job Number: 30913
Job Title: Fermenter VOC Emissions - Livingston West Side Fermenters

PRELIMINARY ESTIMATE

Estimated By: P.H.M.
Checked By: R.H.
Rev. 2 Date: 6/24/05

CODE	ITEM DESCRIPTION	QUANT	UNIT	MHR/ UNIT	TOTAL MHRS	UNIT COSTS $ / Hr	UNIT COSTS MAT'L	UNIT COSTS SUBCON.	UNIT COSTS TOTAL	TOTAL COSTS LABOR	TOTAL COSTS MAT'L	TOTAL COSTS SUBCON.	TOTAL
1	Bolt up	100	ea	6.5	650	65.00			422.50	42,250			42,250
1	Handle	96	ea	7.2	691.2	65.00			468.00	44,928			44,928
1	Install	20	lot	3	60	65.00			195.00	3,900			3,900
	VOC-2												
2	12" Duct	75	ft				62.00		62.00		4,650		4,650
2	12" Duct misc. fittings	1	lot				1,000.00		1,000.00		1,000		1,000
2	Bolt up	21	ea	1.5	31.5	65.00			97.50	2,048			2,048
2	Handle	19	ea	2.08	39.52	65.00			135.20	2,569			2,569
2	Install	4	lot	2	8	65.00			130.00	520			520
2	18" Duct	65	ft				86.00		86.00		5,590		5,590
2	18" Duct misc. fittings	1	lot				2,000.00		2,000.00		2,000		2,000
2	Bolt up	19	ea	3	57	65.00			195.00	3,705			3,705
2	Handle	17	ea	3.52	59.84	65.00			228.80	3,890			3,890
2	Install	3	lot	2	6	65.00			130.00	390			390
2	22" Duct	50	ft				99.00		99.00		4,950		4,950
2	22" Duct misc. fittings	1	lot				2,000.00		2,000.00		2,000		2,000
2	Bolt up	15	ea	4	60	65.00			260.00	3,900			3,900
2	Handle	13	ea	4.6	59.8	65.00			299.00	3,887			3,887
2	Install	3	lot	3	9	65.00			195.00	585			585
2	24" Duct	35	ft				106.00		106.00		3,710		3,710
2	24" Duct misc. fittings	1	lot				3,000.00		3,000.00		3,000		3,000
2	Bolt up	11	ea	4	44	65.00			260.00	2,860			2,860
2	Handle	9	ea	4.6	41.4	65.00			299.00	2,691			2,691
2	Install	2	lot	3	6	65.00			195.00	390			390
2	28" Duct	15	ft				119.00		119.00		1,785		1,785
2	28" Duct misc. fittings	1	lot				2,000.00		2,000.00		2,000		2,000
2	Bolt up	5	ea	5.5	27.5	65.00			357.50	1,788			1,788
2	Handle	4	ea	5.32	21.28	65.00			345.80	1,383			1,383

Eichleay Engineers Inc. of CA

Client Name: Wine Institute
Job Number: 30913
Job Title: Fermenter VOC Emissions - Livingston West Side Fermenters

PRELIMINARY ESTIMATE

Estimated By: P.H.M.
Checked By: R.H.
Rev. 2 **Date:** 6/24/05

CODE	ITEM DESCRIPTION	QUANT	UNIT	MHR/ UNIT	TOTAL MHRS	UNIT COSTS $ / Hr	UNIT COSTS MAT'L	UNIT COSTS SUBCON.	UNIT COSTS TOTAL	TOTAL COSTS LABOR	TOTAL COSTS MAT'L	TOTAL COSTS SUBCON.	TOTAL
2	Install	1	lot	3	3	65.00			195.00	195			195
2	30" Duct	25	ft				128.00		128.00		3,200		3,200
2	30" Duct misc. fittings	1	lot				2,000.00		2,000.00		2,000		2,000
2	Bolt up	8	ea	5.5	44	65.00			357.50	2,860			2,860
2	Handle	6	ea	5.32	31.92	65.00			345.80	2,075			2,075
2	Install	1	lot	3	3	65.00			195.00	195			195
2	32" Duct	265	ft				177.00		177.00		46,905		46,905
2	32" Duct misc. fittings	1	lot				4,500.00		4,500.00		4,500		4,500
2	Bolt up	68	ea	6	408	65.00			390.00	26,520			26,520
2	Handle	66	ea	6	396	65.00			390.00	25,740			25,740
2	Install	13	lot	3	39	65.00			195.00	2,535			2,535
2	42" Duct	415	ft				242.00		242.00		100,430		100,430
2	42" Duct misc. fittings	1	lot				25,000.00		25,000.00		25,000		25,000
2	Bolt up	115	ea	6.5	747.5	65.00			422.50	48,588			48,588
2	Handle	104	ea	7.12	740.48	65.00			462.80	48,131			48,131
2	Install	21	lot	4	84	65.00			260.00	5,460			5,460
	VOC-3												
3	6" Duct	25	ft				38.00		38.00		950		950
3	6" Duct misc. fittings	1	lot				500.00		500.00		500		500
3	Bolt up	7	ea	1	7	65.00			65.00	455			455
3	Handle	6	ea	1.4	8.4	65.00			91.00	546			546
3	Install	1	lot	1.5	1.5	65.00			97.50	98			98
3	10" Duct	35	ft				54.00		54.00		1,890		1,890
3	10" Duct misc. fittings	1	lot				1,000.00		1,000.00		1,000		1,000
3	Bolt up	11	ea	1.5	16.5	65.00			97.50	1,073			1,073
3	Handle	9	ea	1.72	15.48	65.00			111.80	1,006			1,006
3	Install	2	lot	2	4	65.00			130.00	260			260
3	12" Duct	70	ft				62.00		62.00		4,340		4,340

Eichl[illegible]y
Engineers Inc. of CA

Client Name: Wine Institute
Job Number: 30913
Job Title: Fermenter VOC Emissions - Livingston West Side Fermenters

PRELIMINARY ESTIMATE

Estimated By: P.H.M.
Checked By: R.H.
Rev. 2 **Date:** 6/24/05

CODE	ITEM DESCRIPTION	QUANT	UNIT	MHR/ UNIT	TOTAL MHRS	UNIT COSTS $ / Hr	UNIT COSTS MAT'L	UNIT COSTS SUBCON.	UNIT COSTS TOTAL	TOTAL COSTS LABOR	TOTAL COSTS MAT'L	TOTAL COSTS SUBCON.	TOTAL
3	12" Duct misc. fittings	1	lot				1,000.00		1,000.00		1,000		1,000
3	Bolt up	20	ea	1.5	30	65.00			97.50	1,950			1,950
3	Handle	18	ea	2.08	37.44	65.00			135.20	2,434			2,434
3	Install	3	lot	2	6	65.00			130.00	390			390
3	16" Duct	48	ft				69.00		69.00		3,312		3,312
3	16" Duct misc. fittings	1	lot				1,500.00		1,500.00		1,500		1,500
3	Bolt up	14	ea	2.5	35	65.00			162.50	2,275			2,275
3	Handle	12	ea	3	36	65.00			195.00	2,340			2,340
3	Install	3	lot	2	6	65.00			130.00	390			390
3	18" Duct	22	ft				86.00		86.00		1,892		1,892
3	18" Duct misc. fittings	1	lot				2,000.00		2,000.00		2,000		2,000
3	Bolt up	8	ea	3	24	65.00			195.00	1,560			1,560
3	Handle	6	ea	3.52	21.12	65.00			228.80	1,373			1,373
3	Install	1	lot	2	2	65.00			130.00	130			130
3	20" Duct	8	ft				92.00		92.00		736		736
3	20" Duct misc. fittings	1	lot				2,000.00		2,000.00		2,000		2,000
3	Bolt up	3	ea	4	12	65.00			260.00	780			780
3	Handle	2	ea	4.6	9.2	65.00			299.00	598			598
3	Install	1	lot	3	3	65.00			195.00	195			195
3	22" Duct	28	ft				99.00		99.00		2,772		2,772
3	22" Duct misc. fittings	1	lot				2,000.00		2,000.00		2,000		2,000
3	Bolt up	9	ea	4	36	65.00			260.00	2,340			2,340
3	Handle	7	ea	4.6	32.2	65.00			299.00	2,093			2,093
3	Install	2	lot	3	6	65.00			195.00	390			390
3	24" Duct	20	ft				106.00		106.00		2,120		2,120
3	24" Duct misc. fittings	1	lot				3,000.00		3,000.00		3,000		3,000
3	Bolt up	7	ea	4	28	65.00			260.00	1,820			1,820
3	Handle	5	ea	4.6	23	65.00			299.00	1,495			1,495
3	Install	1	lot	3	3	65.00			195.00	195			195

Eichleay Engineers Inc. of CA

Client Name: Wine Institute
Job Number: 30913
Job Title: Fermenter VOC Emissions - Livingston West Side Fermenters

PRELIMINARY ESTIMATE

Estimated By: P.H.M.
Checked By: R.H.
Rev. 2 Date: 6/24/05

CODE	ITEM DESCRIPTION	QUANT	UNIT	MHR/ UNIT	TOTAL MHRS	UNIT COSTS $ / Hr	UNIT COSTS MAT'L	UNIT COSTS SUBCON.	UNIT COSTS TOTAL	TOTAL COSTS LABOR	TOTAL COSTS MAT'L	TOTAL COSTS SUBCON.	TOTAL
3	26" Duct	8	ft				114.00		114.00		912		912
3	26" Duct misc. fittings	1	lot				2,000.00		2,000.00		2,000		2,000
3	Bolt up	3	ea	5	15	65.00			325.00	975			975
3	Handle	2	ea	4.72	9.44	65.00			306.80	614			614
3	Install	1	lot	3	3	65.00			195.00	195			195
3	28" Duct	80	ft				119.00		119.00		9,520		9,520
3	28" Duct misc. fittings	1	lot				3,000.00		3,000.00		3,000		3,000
3	Bolt up	22	ea	5.5	121	65.00			357.50	7,865			7,865
3	Handle	20	ea	5.32	106.4	65.00			345.80	6,916			6,916
3	Install	4	lot	3	12	65.00			195.00	780			780
3	32" Duct	765	ft				177.00		177.00		135,405		135,405
3	32" Duct misc. fittings	1	lot				4,500.00		4,500.00		4,500		4,500
3	Bolt up	204	ea	6	1224	65.00			390.00	79,560			79,560
3	Handle	192	ea	6	1152	65.00			390.00	74,880			74,880
3	Install	38	lot	3	114	65.00			195.00	7,410			7,410
	VOC-4												
4	10" Duct	52	ft				54.00		54.00		2,808		2,808
4	10" Duct misc. fittings	1	lot				1,000.00		1,000.00		1,000		1,000
4	Bolt up	15	ea	1.5	22.5	65.00			97.50	1,463			1,463
4	Handle	13	ea	1.72	22.36	65.00			111.80	1,453			1,453
4	Install	2	lot	2	4	65.00			130.00	260			260
4	12" Duct	52	ft				62.00		62.00		3,224		3,224
4	12" Duct misc. fittings	1	lot				1,000.00		1,000.00		1,000		1,000
4	Bolt up	15	ea	1.5	22.5	65.00			97.50	1,463			1,463
4	Handle	13	ea	2.08	27.04	65.00			135.20	1,758			1,758
4	Install	2	lot	2	4	65.00			130.00	260			260
4	16" Duct	38	ft				77.00		77.00		2,926		2,926
4	16" Duct misc. fittings	1	lot				2,000.00		2,000.00		2,000		2,000

Eichle... Engineers Inc. of CA

Client Name: Wine Institute
Job Number: 30913
Job Title: Fermenter VOC Emissions - Livingston West Side Fermenters

PRELIMINARY ESTIMATE

Estimated By: P.H.M.
Checked By: R.H.
Rev. 2 **Date:** 6/24/05

CODE	ITEM DESCRIPTION	QUANT	UNIT	MHR/ UNIT	TOTAL MHRS	UNIT COSTS $ / Hr	UNIT COSTS MAT'L	UNIT COSTS SUBCON.	UNIT COSTS TOTAL	TOTAL COSTS LABOR	TOTAL COSTS MAT'L	TOTAL COSTS SUBCON.	TOTAL
4	Bolt up	12	ea	2	24	65.00			130.00	1,560			1,560
4	Handle	10	ea	3	30	65.00			195.00	1,950			1,950
4	Install	3	lot	2	6	65.00			130.00	390			390
4	18" Duct	50	ft				86.00		86.00		4,300		4,300
4	18" Duct misc. fittings	1	lot				2,000.00		2,000.00		2,000		2,000
4	Bolt up	14	ea	3	42	65.00			195.00	2,730			2,730
4	Handle	13	ea	3.52	45.76	65.00			228.80	2,974			2,974
4	Install	3	lot	2	6	65.00			130.00	390			390
4	20" Duct	18	ft				92.00		92.00		1,656		1,656
4	20" Duct misc. fittings	1	lot				2,000.00		2,000.00		2,000		2,000
4	Bolt up	7	ea	3.5	24.5	65.00			227.50	1,593			1,593
4	Handle	5	ea	4.12	20.6	65.00			267.80	1,339			1,339
4	Install	2	lot	2	4	65.00			130.00	260			260
4	22" Duct	30	ft				99.00		99.00		2,970		2,970
4	22" Duct misc. fittings	1	lot				2,000.00		2,000.00		2,000		2,000
4	Bolt up	9	ea	4	36	65.00			260.00	2,340			2,340
4	Handle	8	ea	4.6	36.8	65.00			299.00	2,392			2,392
4	Install	2	lot	3	6	65.00			195.00	390			390
4	24" Duct	30	ft				106.00		106.00		3,180		3,180
4	24" Duct misc. fittings	1	lot				3,000.00		3,000.00		3,000		3,000
4	Bolt up	9	ea	4	36	65.00			260.00	2,340			2,340
4	Handle	8	ea	4.6	36.8	65.00			299.00	2,392			2,392
4	Install	2	lot	3	6	65.00			195.00	390			390
4	26" Duct	85	ft				114.00		114.00		9,690		9,690
4	26" Duct misc. fittings	1	lot				3,000.00		3,000.00		3,000		3,000
4	Bolt up	24	ea	5	120	65.00			325.00	7,800			7,800
4	Handle	22	ea	4.72	103.84	65.00			306.80	6,750			6,750
4	Install	5	lot	3	15	65.00			195.00	975			975
4	32" Duct	715	ft				177.00		177.00		126,555		126,555

Eichl y
Engineers Inc. of CA

Client Name: Wine Institute
Job Number: 30913
Job Title: Fermenter VOC Emissions - Livingston West Side Fermenters

PRELIMINARY ESTIMATE

Estimated By: P.H.M.
Checked By: R.H.
Rev. 2 **Date:** 6/24/05

CODE	ITEM DESCRIPTION	QUANT	UNIT	MHR/ UNIT	TOTAL MHRS	UNIT COSTS $ / Hr	UNIT COSTS MAT'L	UNIT COSTS SUBCON.	UNIT COSTS TOTAL	TOTAL COSTS LABOR	TOTAL COSTS MAT'L	TOTAL COSTS SUBCON.	TOTAL
4	32" Duct misc. fittings	1	lot				4,500.00		4,500.00		4,500		4,500
4	Bolt up	190	ea	6	1140	65.00			390.00	74,100			74,100
4	Handle	178	ea	6	1068	65.00			390.00	69,420			69,420
4	Install	36	lot	3	108	65.00			195.00	7,020			7,020
1	Install an 10" duct bank duct	17	ea	48	816	65.00	4,545.00		7,665.00	53,040	77,265		130,305
3	Install an 6" tank duct bank duct	7	ea	46	322	65.00	4,202.00		7,192.00	20,930	29,414		50,344
3	Install an 10" duct bank duct	10	ea	48	480	65.00	4,545.00		7,665.00	31,200	45,450		76,650
2	Install an 12" duct bank duct	12	ea	48	576	65.00	4,699.00		7,819.00	37,440	56,388		93,828
4	Install an 10" duct bank duct	14	ea	48	672	65.00	4,545.00		7,665.00	43,680	63,630		107,310
ALL	Allowance for drilling & welding flange to main ducts	60	ea				1,350.00		1,350.00		81,000		81,000
	at factory												
1	Install ducting from KO drum to VOC - 1 - 28" duct	1	lot	71.28	71.28	65.00	6,750.00		11,383.20	4,633	6,750		11,383
2	Install ducting from KO drum to VOC - 2 - 36" duct	1	lot	88.48	88.48	65.00	11,754.00		17,505.20	5,751	11,754		17,505
3	Install ducting from KO drum to VOC - 3 - 26" duct	1	lot	71.28	71.28	65.00	6,032.00		10,665.20	4,633	6,032		10,665
4	Install ducting from KO drum to VOC - 4 -26" duct	1	lot	71.28	71.28	65.00	6,032.00		10,665.20	4,633	6,032		10,665
	Allowance to modify spreader on top of tanks												
1	VOC -1 Tanks	17	ea					1,800.00	1,800.00			30,600	30,600
2	VOC -2 Tanks	12	ea					1,800.00	1,800.00			21,600	21,600
3	VOC -3 Tanks	17	ea					1,800.00	1,800.00			30,600	30,600
4	VOC -4 Tanks	14	ea					1,800.00	1,800.00			25,200	25,200
ALL	Allowance for special rigging tools & frames	1	lot					10,000.00	10,000.00			10,000	10,000

Eichleay Engineers, Inc. of CA

Client Name: Wine Institute
Job Number: 30913
Job Title: Fermenter VOC Emissions - Livingston West Side Fermenters

PRELIMINARY ESTIMATE

Estimated By: P.H.M.
Checked By: R.H.
Rev. 2 **Date:** 6/24/05

CODE	ITEM DESCRIPTION	QUANT	UNIT	MHR/ UNIT	TOTAL MHRS	UNIT COSTS $ / Hr	UNIT COSTS MAT'L	UNIT COSTS SUBCON.	UNIT COSTS TOTAL	TOTAL COSTS LABOR	TOTAL COSTS MAT'L	TOTAL COSTS SUBCON.	TOTAL
	Helicopter for steel & ducting												
	VOC-1 system												
1	assume 54 lifts	60	hrs					6,000.00	6,000.00			360,000	360,000
	crew per diem	8	days					750.00	750.00			6,000	6,000
	VOC-2 system												
2	assume 28 lifts	35	hrs					6,000.00	6,000.00			210,000	210,000
	crew per diem	5	days					750.00	750.00			3,750	3,750
	VOC-3 system												
3	assume 28 lifts	35	hrs					6,000.00	6,000.00			210,000	210,000
	crew per diem	5	days					750.00	750.00			3,750	3,750
	VOC-4 system												
4	assume 23 lifts	30	hrs					6,000.00	6,000.00			180,000	180,000
	crew per diem	5	days					750.00	750.00			3,750	3,750
	Allowance for crane to install VOC's												
1	VOC-1	3	wks	160	480	75.00		2,500.00	14,500.00	36,000		7,500	43,500
2	VOC-2	3	wks	160	480	75.00		2,500.00	14,500.00	36,000		7,500	43,500
3	VOC-3	3	wks	160	480	75.00		2,500.00	14,500.00	36,000		7,500	43,500
4	VOC-4	3	wks	160	480	75.00		2,500.00	14,500.00	36,000		7,500	43,500
ALL	allowance for overtime to build structures	1	lot	2000	2000	20.00			40,000.00	40,000			40,000
	to work around helicopter usage												
	TOTAL - Process Piping & Equipment				24987					1,555,068	3,175,093	1,197,250	5,927,411

Eichleay Engineers Inc. of CA

Client Name: Wine Institute
Job Number: 30913
Job Title: Fermenter VOC Emissions - Livingston West Side Fermenters

PRELIMINARY ESTIMATE

Estimated By: P.H.M.
Checked By: R.H.
Rev. 2 **Date:** 6/24/05

CODE	ITEM DESCRIPTION	QUANT	UNIT	MHR/ UNIT	TOTAL MHRS	UNIT COSTS $ / Hr	UNIT COSTS MAT'L	UNIT COSTS SUBCON.	UNIT COSTS TOTAL	TOTAL COSTS LABOR	TOTAL COSTS MAT'L	TOTAL COSTS SUBCON.	TOTAL
	Contingency												
2.00	Site Construction					25%	25%	25%				317,508	317,508
3.00	Concrete					50%	50%	50%				222,475	222,475
4.00	Masonry					25%	25%	25%					
5.00	Metals					30%	30%	30%		213,588	533,879	12,000	759,466
6.00	Wood & Plastics					25%	25%	25%					
7.00	Thermal & Moisture Protection					25%	25%	25%					
8.00	Door & Windows					25%	25%	25%					
9.00	Finishes					25%	25%	25%					
10.00	Specialties					25%	25%	25%		65		2,090	2,155
11.00	Equipment					25%	25%	25%					
12.00	Furnishings					25%	25%	25%					
13.00	Special Construction					25%	25%	25%					
14.00	Conveying Systems					25%	25%	25%					
15.00	Mechanical HVAC & Plumbing					25%	25%	25%					
16.00	Electrical					30%	30%	30%		19,505	25,736	16,020	61,261
17.00	Instruments & Controls					30%	30%	30%		42,165	201,669	37,500	281,334
18.00	Process Piping & Equipment					35%	35%	35%		544,274	1,111,283	419,038	2,074,594
	Design Fee Allowance							35%				735,000	735,000
	Construction Management Allowance							30%				126,000	126,000
	Plan Check & Permit Fee Allowance							25%				12,135	12,135
	Third Party Inspection Allowance							25%				9,101	9,101
	ROUND OFF	1											
	TOTAL - Contingency									819,596	1,872,566	1,908,866	4,601,028

Eichleay Engineers Inc. of California

ESTIMATE SUMMARY SHEET

Client Name: Wine Institute — **Estimated By:** P.H.M.

Job Number: 30913 — PRELIMINARY ESTIMATE — **Checked By:** R.H.

Job Title: Fermenter VOC Emissions - LIVINGSTON UTILITIES — **Rev.** 2 **Date:** 6/24/05

CODE	ITEM DESCRIPTION	TOTAL COSTS				TOTAL
		RTO-1	RTO-2	RTO-3	RTO-4	
	SUMMARY					
2.00	Site Construction	$9,350	$0	$0	$0	$9,350
3.00	Concrete	$81,050	$0	$0	$0	$81,050
4.00	Masonry					$0
5.00	Metals	$5,000	$5,000	$5,000	$5,000	$20,000
6.00	Wood & Plastics					$0
7.00	Thermal & Moisture Protection	$89,600	$34,400	$29,600	$11,000	$164,600
8.00	Door & Windows					$0
9.00	Finishes					$0
10.00	Specialties					$0
11.00	Equipment					$0
12.00	Furnishings					$0
13.00	Special Construction					$0
14.00	Conveying Systems					$0
15.00	Mechanical HVAC & Plumbing					$0
16.00	Electrical	$326,368	$0	$0	$0	$326,368
17.00	Instruments & Controls	$116,680	$37,631	$37,632	$37,632	$229,575
18.00	Process Piping & Equipment	$1,331,505	$784,365	$924,335	$828,665	$3,868,870
	Sub Total	$1,959,553	$861,396	$996,567	$882,297	$4,699,813
	Tax & Freight	$99,669	$41,722	$48,676	$41,722	$231,789
	General Conditions	$164,738	$72,249	$83,619	$73,922	$394,528
	General Contractor Mark-Up	$222,396	$97,537	$112,886	$99,794	$532,613
	Field Costs - Sub Total	$2,446,356	$1,072,904	$1,241,748	$1,097,735	$5,858,743
	Design Fee Allowance	366,953	160,936	186,262	164,660	$878,812
	Construction Management Allowance	$73,391	$32,187	$37,252	$32,932	$175,762
	Plan Check & Permit Fee Allowance	$777	$325	$380	$325	$1,808
	Third Party Inspection Allowance	$583	$244	$285	$244	$1,356
	Escalation	$112,069	$50,101	$59,830	$54,113	$276,113
	Project Contingency	$847,578	$354,800	$413,934	$354,800	$1,971,112
	Sub Total	$3,847,708	$1,671,498	$1,939,691	$1,704,809	$9,163,707
	Owners Costs	$36,695	$16,094	$18,626	$16,466	$87,881
	Round Off	-$404	$409	-$318	-$275	-$588
	GRAND TOTAL	$3,884,000	$1,688,000	$1,958,000	$1,721,000	$9,251,000

Prepared By: [signature]
Date: 6/24/05

Approved By: [signature]
Date: 6/24/05

Eichleay Engineers Inc. of California

ESTIMATE SUMMARY SHEET

Client Name: Wine Institute — **Estimated By:** P.H.M.

Job Number: 30913 — PRELIMINARY ESTIMATE — **Checked By:** R.H.

Job Title: Fermenter VOC Emissions - LIVINGSTON UTILITIES — **Rev.** 2 — **Date:** 6/24/05

W/O ESCALATION & OWNERS COSTS

CODE	ITEM DESCRIPTION	TOTAL COSTS RTO-1	RTO-2	RTO-3	RTO-4	TOTAL
	SUMMARY					
2.00	Site Construction	$9,350	$0	$0	$0	$9,350
3.00	Concrete	$81,050	$0	$0	$0	$81,050
4.00	Masonry					$0
5.00	Metals	$5,000	$5,000	$5,000	$5,000	$20,000
6.00	Wood & Plastics					$0
7.00	Thermal & Moisture Protection	$89,600	$34,400	$29,600	$11,000	$164,600
8.00	Door & Windows					$0
9.00	Finishes					$0
10.00	Specialties					$0
11.00	Equipment					$0
12.00	Furnishings					$0
13.00	Special Construction					$0
14.00	Conveying Systems					$0
15.00	Mechanical HVAC & Plumbing					$0
16.00	Electrical	$326,368	$0	$0	$0	$326,368
17.00	Instruments & Controls	$116,680	$37,631	$37,632	$37,632	$229,575
18.00	Process Piping & Equipment	$1,331,505	$784,365	$924,335	$828,665	$3,868,870
	Sub Total	$1,969,553	$861,396	$996,567	$882,297	$4,699,813
	Tax & Freight	$99,669	$41,722	$48,676	$41,722	$231,789
	General Conditions	$164,738	$72,249	$83,619	$73,922	$394,528
	General Contractor Mark-Up	$222,396	$97,537	$112,886	$99,794	$532,613
	Field Costs - Sub Total	$2,446,356	$1,072,904	$1,241,748	$1,097,735	$5,858,743
	Design Fee Allowance	366,953	160,936	186,262	164,660	$878,812
	Construction Management Allowance	$73,391	$32,187	$37,252	$32,932	$175,762
	Plan Check & Permit Fee Allowance	$777	$325	$380	$325	$1,808
	Third Party Inspection Allowance	$583	$244	$285	$244	$1,356
	Escalation					$0
	Project Contingency	$847,578	$354,800	$413,934	$354,800	$1,971,112
	Sub Total	$3,735,639	$1,621,397	$1,879,861	$1,650,697	$8,887,593
	Owners Costs					$0
	Round Off	$407				$407
	GRAND TOTAL	$3,736,046	$1,621,397	$1,879,861	$1,650,697	$8,888,000

Prepared By: Paul H. — Date: 6/24/05

Approved By: R.W. Hedges — Date: 6/24/05

Eichleay Engineers Inc. of California

ESTIMATE SUMMARY SHEET

Client Name: Wine Institute — **Estimated By:** P.H.M.

Job Number: 30913 — PRELIMINARY ESTIMATE — **Checked By:** R.H.

Job Title: Fermenter VOC Emissions - LIVINGSTON UTILITIES — **Rev.** 2 — **Date:** 6/24/05

W/O Escalation & Owners Costs

CODE	ITEM DESCRIPTION	TOTAL MHRS	TOTAL COSTS LABOR	TOTAL COSTS MAT'L	TOTAL COSTS SUBCON.	TOTAL
	SUMMARY					
2.00	Site Construction		$0	$0	$9,350	$9,350
3.00	Concrete		$0	$0	$81,050	$81,050
4.00	Masonry		$0	$0	$0	$0
5.00	Metals		$0	$0	$20,000	$20,000
6.00	Wood & Plastics		$0	$0	$0	$0
7.00	Thermal & Moisture Protection		$0	$0	$164,600	$164,600
8.00	Door & Windows		$0	$0	$0	$0
9.00	Finishes		$0	$0	$0	$0
10.00	Specialties		$0	$0	$0	$0
11.00	Equipment		$0	$0	$0	$0
12.00	Furnishings		$0	$0	$0	$0
13.00	Special Construction		$0	$0	$0	$0
14.00	Conveying Systems		$0	$0	$0	$0
15.00	Mechanical HVAC & Plumbing		$0	$0	$0	$0
16.00	Electrical		$135,577	$181,792	$9,000	$326,368
17.00	Instruments & Controls		$78,975	$150,600	$0	$229,575
18.00	Process Piping & Equipment		$2,066,090	$1,774,780	$28,000	$3,868,870
	Sub Total		$2,280,642	$2,107,172	$312,000	$4,699,813
	Tax & Freight (11%)					$231,789
	General Conditions (8%)					$394,528
	General Contractor Mark-Up (10%)					$532,613
	Field Costs - Sub Total					$5,858,743
	Design Fee Allowance (15%)					$878,811
	Construction Management Allowance (3%)					$175,762
	Plan Check & Permit Fee Allowance (2%)					$1,808
	Third Party Inspection Allowance (1.5%)					$1,356
	Escalation					
	Project Contingency					$1,971,112
	Sub Total					$8,887,593
	Owners Costs					$0
	Round Off					$407
	GRAND TOTAL					$8,888,000

Prepared By: [signature]
Date: 6/24/05

Approved By: R.W. Hedges
Date: 6/24/05

Eichleay Engineers Inc. of CA

Client Name: Wine Institute
Job Number: 30913
Job Title: Fermenter VOC Emissions - LIVINGSTON UTILITIES

PRELIMINARY ESTIMATE

Estimated By: P.H.M.
Checked By: R.H.
Rev. 2 **Date:** 6/24/05

O:\30913\5.0 Design Documents\Estimates\Rev. 2\Living

CODE	ITEM DESCRIPTION	QUANT	UNIT	MHR/ UNIT	TOTAL MHRS	UNIT COSTS $ / Hr	UNIT COSTS MAT'L	UNIT COSTS SUBCON.	UNIT COSTS TOTAL	TOTAL COSTS LABOR	TOTAL COSTS MAT'L	TOTAL COSTS SUBCON.	TOTAL
	020 - Site Construction												
1	Excavation for KOH system	178	cy					50.00	50.00			8,900	8,900
1	Excavation for Air compressor / dryer unit	9	cy					50.00	50.00			450	450
	TOTAL - Site Construction											9,350	9,350

Eichleay
Engineers Inc. of CA

Client Name: Wine Institute
Job Number: 30913
Job Title: Fermenter VOC Emissions - LIVINGSTON UTILITIES

PRELIMINARY ESTIMATE

Estimated By: P.H.M.
Checked By: R.H.
Rev. 2 Date: 6/24/05

O:\30913\5.0 Design Documents\Estimates\Rev. 2\Living

CODE	ITEM DESCRIPTION	QUANT	UNIT	MHR/ UNIT	TOTAL MHRS	UNIT COSTS $ / Hr	UNIT COSTS MAT'L	UNIT COSTS SUBCON.	UNIT COSTS TOTAL	TOTAL COSTS LABOR	TOTAL COSTS MAT'L	TOTAL COSTS SUBCON.	TOTAL
	030 - Concrete												
1	Install foundation for KOH system	133	cy					450.00	450.00			59,850	59,850
1	Install curb around KOH system	23	cy					550.00	550.00			12,650	12,650
1	Install foundation for Air compressor / air dryer	9	cy					450.00	450.00			4,050	4,050
1	Allowance for electrical equipment foundations	10	cy					450.00	450.00			4,500	4,500
	TOTAL - Concrete											81,050	81,050

Eichle
Engineers Inc. of CA

Client Name: Wine Institute
Job Number: 30913
Job Title: Fermenter VOC Emissions - LIVINGSTON UTILITIES

PRELIMINARY ESTIMATE

Estimated By: P.H.M.
Checked By: R.H.
Rev. 2 **Date:** 6/24/05

O:\30913\5.0 Design Documents\Estimates\Rev. 2\Living

CODE	ITEM DESCRIPTION	QUANT	UNIT	MHR/ UNIT	TOTAL MHRS	UNIT COSTS $ / Hr	UNIT COSTS MAT'L	UNIT COSTS SUBCON.	UNIT COSTS TOTAL	TOTAL COSTS LABOR	TOTAL COSTS MAT'L	TOTAL COSTS SUBCON.	TOTAL
	050 - Metals												
all	Allowance for misc. supports	1	lot					20,000.00	20,000.00			20,000	20,000
	TOTAL - Metals											20,000	20,000

Eichler Engineers Inc. of CA

Client Name: Wine Institute
Job Number: 30913
Job Title: Fermenter VOC Emissions - LIVINGSTON UTILITIES

PRELIMINARY ESTIMATE

Estimated By: P.H.M.
Checked By: R.H.
Rev. 2 **Date:** 6/24/05

O:\30913\5.0 Design Documents\Estimates\Rev. 2\Living

CODE	ITEM DESCRIPTION	QUANT	UNIT	MHR/ UNIT	TOTAL MHRS	UNIT COSTS $ / Hr	UNIT COSTS MAT'L	UNIT COSTS SUBCON.	UNIT COSTS TOTAL	TOTAL COSTS LABOR	TOTAL COSTS MAT'L	TOTAL COSTS SUBCON.	TOTAL
	070 - Thermal & Moisture Protection												
all	Allowance for insulation for tank	1	lot					8,000.00	8,000.00			8,000	8,000
1	Allowance for insulation on 4" KOH pipe	2920	ft					30.00	30.00			87,600	87,600
2	Allowance for insulation on 4" KOH pipe	1080	ft					30.00	30.00			32,400	32,400
3	Allowance for insulation on 4" KOH pipe	920	ft					30.00	30.00			27,600	27,600
4	Allowance for insulation on 4" KOH pipe	300	ft					30.00	30.00			9,000	9,000
	TOTAL - Thermal & Moisture Protection											164,600	164,600

Eichler
Engineers Inc. of CA

Client Name: Wine Institute
Job Number: 30913
Job Title: Fermenter VOC Emissions - LIVINGSTON UTILITIES

PRELIMINARY ESTIMATE

Estimated By: P.H.M.
Checked By: R.H.
Rev. 2 **Date:** 6/24/05

O:\30913\5.0 Design Documents\Estimates\Rev. 2\Livin

CODE	ITEM DESCRIPTION	QUANT	UNIT	MHR/ UNIT	TOTAL MHRS	UNIT COSTS $ / Hr	UNIT COSTS MAT'L	UNIT COSTS SUBCON.	UNIT COSTS TOTAL	TOTAL COSTS LABOR	TOTAL COSTS MAT'L	TOTAL COSTS SUBCON.	TOTAL
	016 - Electrical												
1	MOTOR CONTROL CENTER STRUCTURE	1	EA	10	10	75.00	1,800.00		2,550.00	750	1,800		2,550
1	200A MAIN BREAKER	1	EA	4.21	4	75.00	710.00		1,025.75	316	710		1,026
1	STARTER SIZE 1 480VAC MCC BOX	1	EA	2.9	3	75.00	945.00		1,162.50	218	945		1,163
1	STARTER SIZE 2 480VAC MCC BOX	1	EA	4	4	75.00	1,075.00		1,375.00	300	1,075		1,375
1	STARTER SIZE 3 480VAC MCC BOX	1	EA	8	8	75.00	1,800.00		2,400.00	600	1,800		2,400
1	CHECKOUT AND TESTING	1	LOT	40	40	75.00			3,000.00	3,000			3,000
	POWER DISTRIBUTION												
1	TRANSFORMER 1500KVA 15KV/480V	1	EA	100	100	75.00	27,500.00		35,000.00	7,500	27,500		35,000
1	DISCONNECT SWITCH 15KV	1	EA	56	56	75.00	17,500.00		21,700.00	4,200	17,500		21,700
1	15KV 1/0 CONDUCTOR	60	CLF	4.211	253	75.00	215.00		530.83	18,950	12,900		31,850
1	15KVLOAD BREAK DISC.& UTILITY CONNECTION	1	LOT	100	100	75.00	39,800.00		47,300.00	7,500	39,800		47,300
1	3" RIGID ALUMINUM	2000	LF	0.18	360	75.00	10.50		24.00	27,000	21,000		48,000
1	24X36X42 PULL BOX	30	EA	10.5	315	75.00	885.00		1,672.50	23,625	26,550		50,175
1	3" 90-DEGREE ELBOWS	2	EA	1.9	4	75.00	69.00		211.50	285	138		423
1	3" IN-LINE FITTINGS	2	EA	2.9	6	75.00	415.00		632.50	435	830		1,265
1	MISC SUPPORTS, FITTINGS, TERMINATIONS	1	LOT							17,899	29,244		47,143
1	CHECKOUT AND TESTING	1	LOT	40	40	75.00			3,000.00	3,000			3,000
1	Allowance for trenching power cable	300	ft					30.00	30.00			9,000	9,000
1	Allowance for overtime	1	lot	200	200	100.00			20,000.00	20,000			20,000
	TOTAL - Electrical				1502					135,577	181,792	9,000	326,368

Eichler Engineers Inc. of CA

Client Name: Wine Institute
Job Number: 30913
Job Title: Fermenter VOC Emissions - LIVINGSTON UTILITIES

PRELIMINARY ESTIMATE

Estimated By: P.H.M.
Checked By: R.H.
Rev. 2 **Date:** 6/24/05

O:\30913\5.0 Design Documents\Estimates\Rev. 2\Living

CODE	ITEM DESCRIPTION	QUANT	UNIT	MHR/ UNIT	TOTAL MHRS	UNIT COSTS $ / Hr	UNIT COSTS MAT'L	UNIT COSTS SUBCON.	UNIT COSTS TOTAL	TOTAL COSTS LABOR	TOTAL COSTS MAT'L	TOTAL COSTS SUBCON.	TOTAL
	017 - Instruments & Controls												
	2% KOH equipment												
1	Conservation vents	2	ea	4	8	75.00	1,200.00		1,500.00	600	2,400		3,000
1	Relief vents	2	ea	2	4	75.00	3,000.00		3,150.00	300	6,000		6,300
1	Level transmitter & indicator	2	ea	4	8	75.00	1,200.00		1,500.00	600	2,400		3,000
1	High level switch	1	ea	2	2	75.00	500.00		650.00	150	500		650
1	Pressure gauge	6	ea	1	6	75.00	300.00		375.00	450	1,800		2,250
1	Pressure transmitter		ea			75.00	2,100.00		2,100.00				
1	temperature gauge & TW	6	ea	4	24	75.00	300.00		600.00	1,800	1,800		3,600
1	Temperature transmitter, RTD, TW	1	ea	4	4	75.00	1,200.00		1,500.00	300	1,200		1,500
1	Temperature control valve	1	ea	6	6	75.00	1,800.00		2,250.00	450	1,800		2,250
1	Relief valves	2	ea	2	4	75.00	300.00		450.00	300	600		900
1	Pressure regulator, liquid	1	ea	2	2	75.00	300.00		450.00	150	300		450
1	Pressure regulator, steam	1	ea	2	2	75.00	1,500.00		1,650.00	150	1,500		1,650
1	Sight glass	2	ea	4	8	75.00	1,000.00		1,300.00	600	2,000		2,600
1	Totalizing mass flow meter	2	ea	6	12	75.00	25,000.00		25,450.00	900	50,000		50,900
	CIP Instruments												
all	pressure gauge	158	ea	1	158	75.00	180.00		255.00	11,850	28,440		40,290
all	Install control valves for KOH & water lines	120	ea	2	240	75.00	250.00		400.00	18,000	30,000		48,000
all	Install conduit to valves	3000	ft	0.1	300	75.00	3.00		10.50	22,500	9,000		31,500
all	Install wire to valve	60	ea	1	60	75.00	5.00		80.00	4,500	300		4,800
all	Install dual manual switch at grade per tank	60	ea	1	60	75.00	120.00		195.00	4,500	7,200		11,700
all	Install conduit for power to switch	1000	ft	0.1	100	75.00	3.00		10.50	7,500	3,000		10,500
all	Install wire to switch	3000	ft	0.015	45	75.00	0.12		1.25	3,375	360		3,735
	TOTAL - Instruments & Controls				1053					78,975	150,600		229,575

Eichleay Engineers Inc. of CA

Client Name: Wine Institute
Job Number: 30913
Job Title: Fermenter VOC Emissions - LIVINGSTON UTILITIES

PRELIMINARY ESTIMATE

Estimated By: P.H.M.
Checked By: R.H.
Rev. 2 **Date:** 6/24/05

CODE	ITEM DESCRIPTION	QUANT	UNIT	MHR/ UNIT	TOTAL MHRS	UNIT COSTS $ / Hr	UNIT COSTS MAT'L	UNIT COSTS SUBCON.	UNIT COSTS TOTAL	TOTAL COSTS LABOR	TOTAL COSTS MAT'L	TOTAL COSTS SUBCON.	TOTAL
	018 - Process Piping & Equipment												
	2% KOH equipment												
1	50% tank	1	ea	4	4	65.00	13,800.00		14,060.00	260	13,800		14,060
1	50% pump	1	ea	6	6	65.00	2,530.00		2,920.00	390	2,530		2,920
1	50% filter	2	ea	2	4	65.00	1,380.00		1,510.00	260	2,760		3,020
1	2% tank	1	ea	10	10	65.00	46,920.00		47,570.00	650	46,920		47,570
1	2% pump	1	ea	6	6	65.00	5,750.00		6,140.00	390	5,750		6,140
1	2% eductor	1	ea	10	10	65.00	1,150.00		1,800.00	650	1,150		1,800
1	2% heat exchanger	1	ea	4	4	65.00	2,990.00		3,250.00	260	2,990		3,250
1	2% filter	2	ea	2	4	65.00	1,840.00		1,970.00	260	3,680		3,940
1	Crane for installing KOH equipment	1	lot					3,000.00	3,000.00			3,000	3,000
	CIP Equipment												
1	Spray nozzles (ducting)	235	ea	2	470	65.00	250.00		380.00	30,550	58,750		89,300
1	Spray nozzles (KO Pots)	6	ea	2	12	65.00	300.00		430.00	780	1,800		2,580
1	Spray nozzels for main ducting	107	ea	2	214	65.00	250.00		380.00	13,910	26,750		40,660
1	Install sanitize inductors for in main ducting	55	ea	2	110	65.00	300.00		430.00	7,150	16,500		23,650
1	Allowance for valves for KOH & water clean out	428	ea	4	1712	65.00	150.00		410.00	111,280	64,200		175,480
2	Spray nozzles (ducting)	235	ea	2	470	65.00	250.00		380.00	30,550	58,750		89,300
2	Spray nozzles (KO Pots)	6	ea	2	12	65.00	300.00		430.00	780	1,800		2,580
2	Spray nozzels for main ducting	116	ea	2	232	65.00	250.00		380.00	15,080	29,000		44,080
2	Install sanitize inductors for in main ducting	58	ea	2	116	65.00	300.00		430.00	7,540	17,400		24,940
2	Allowance for valves for KOH & water clean out	464	ea	4	1856	65.00	150.00		410.00	120,640	69,600		190,240
3	Spray nozzles (ducting)	235	ea	2	470	65.00	250.00		380.00	30,550	58,750		89,300
3	Spray nozzles (KO Pots)	6	ea	2	12	65.00	300.00		430.00	780	1,800		2,580
3	Spray nozzels for main ducting	189	ea	2	378	65.00	250.00		380.00	24,570	47,250		71,820
3	Install sanitize inductors for in main ducting	95	ea	2	190	65.00	300.00		430.00	12,350	28,500		40,850
3	Allowance for valves for KOH & water clean out	756	ea	4	3024	65.00	150.00		410.00	196,560	113,400		309,960
4	Spray nozzles (ducting)	235	ea	2	470	65.00	250.00		380.00	30,550	58,750		89,300

Eichleay Engineers Inc. of CA.

Client Name: Wine Institute
Job Number: 30913
Job Title: Fermenter VOC Emissions - LIVINGSTON UTILITIES

PRELIMINARY ESTIMATE

Estimated By: P.H.M.
Checked By: R.H.
Rev. 2 **Date:** 6/24/05

CODE	ITEM DESCRIPTION	QUANT	UNIT	MHR/ UNIT	TOTAL MHRS	UNIT COSTS $ / Hr	UNIT COSTS MAT'L	UNIT COSTS SUBCON.	UNIT COSTS TOTAL	TOTAL COSTS LABOR	TOTAL COSTS MAT'L	TOTAL COSTS SUBCON.	TOTAL
4	Spray nozzles (KO Pots)	6	ea	2	12	65.00	300.00		430.00	780	1,800		2,580
4	Spray nozzels for main ducting	178	ea	2	356	65.00	250.00		380.00	23,140	44,500		67,640
4	Install sanitize inductors for in main ducting	90	ea	2	180	65.00	300.00		430.00	11,700	27,000		38,700
4	Allowance for valves for KOH & water clean out	712	ea	4	2848	65.00	150.00		410.00	185,120	106,800		291,920
	Install sanitize system at each tank												
all	Install 1 1/2" PP pipe	4800	ft	0.3	1440	65.00	3.00		22.50	93,600	14,400		108,000
all	Install inductor	60		2	120	65.00	300.00		430.00	7,800	18,000		25,800
1 & 2	Allowance for a sanitize cart for main duct cleaning	2	ea					2,500.00	2,500.00			5,000	5,000
	Utility Equipment												
1	Air compressor, oil free, 180cfm, 50 HP	2	ea	10	20	65.00	42,000.00		42,650.00	1,300	84,000		85,300
1	Air dryer, reciever tank and filters, 180cfm	2	ea	10	20	65.00	14,200.00		14,850.00	1,300	28,400		29,700
1	Allowance to install 2" natural gas pipe	1060	ft	1.2	1272	65.00	5.00		83.00	82,680	5,300		87,980
1	Allowance for natural gas valves & fittings	1	lot				2,000.00		2,000.00		2,000		2,000
all	Allowance to install 2" air line feeding the VOC's	500	ft	1.2	600	65.00	5.00		83.00	39,000	2,500		41,500
all	Allowance for air line valves & fittings	1	lot				6,000.00		6,000.00		6,000		6,000
all	Allowance to install 2" local water line to each tank	1800	ft	1	1800	65.00	5.00		70.00	117,000	9,000		126,000
all	Allowance to install 2" valves & fittings for water line	60	ea	4	240	65.00	120.00		380.00	15,600	7,200		22,800
1	Allowance to install 3" water line to KOH / main rack	800	ft	0.6	480	65.00	6.00		45.00	31,200	4,800		36,000
1	Fab & install 4" KOH line for main duct for system 1	1180	ft	1	1180	65.00	50.00		115.00	76,700	59,000		135,700
1	Fab & install 4" KOH line for tanks in system 1	1740	ft	1	1740	65.00	50.00		115.00	113,100	87,000		200,100

Eichl / Engineers Inc. of CA

Client Name: Wine Institute
Job Number: 30913
Job Title: Fermenter VOC Emissions - LIVINGSTON UTILITIES

PRELIMINARY ESTIMATE

Estimated By: P.H.M.
Checked By: R.H.
Rev. 2 **Date:** 6/24/05

CODE	ITEM DESCRIPTION	QUANT	UNIT	MHR/ UNIT	TOTAL MHRS	UNIT COSTS $ / Hr	UNIT COSTS MAT'L	UNIT COSTS SUBCON.	UNIT COSTS TOTAL	TOTAL COSTS LABOR	TOTAL COSTS MAT'L	TOTAL COSTS SUBCON.	TOTAL
2	Fab & Install 4" KOH line for main duct for system 2	330	ft	1	330	65.00	50.00		115.00	21,450	16,500		37,950
2	Fab & Install 4" KOH line for tanks in system 2	750	ft	1	750	65.00	50.00		115.00	48,750	37,500		86,250
3	Fab & Install 4" KOH line for main duct for system 3	160	ft	1	160	65.00	50.00		115.00	10,400	8,000		18,400
3	Fab & Install 4" KOH line for tanks in system 3	760	ft	1	760	65.00	50.00		115.00	49,400	38,000		87,400
4	Fab & Install 4" KOH line for main duct for system 4		ft			65.00	50.00		50.00				
4	Fab & Install 4" KOH line for tanks in system 4	300	ft	1	300	65.00	50.00		115.00	19,500	15,000		34,500
all	Fab & Install 2" drain to tank & ground from duct	60	ea	55	3300	65.00	2,100.00		5,675.00	214,500	126,000		340,500
all	Fab & Install 1" CIP line at each duct	60	ea	65	3900	65.00	4,700.00		8,925.00	253,500	282,000		535,500
1	Fab & Install 1 1/2" FRP piping	1	ea	48	48	65.00	4,000.00		7,120.00	3,120	4,000		7,120
1	Fab & Install 2" FRP piping	1	ea	34	34	65.00	2,500.00		4,710.00	2,210	2,500		4,710
1	Allowance for 4" ss pipe at KOH unit	1	lot	100	100	65.00	5,000.00		11,500.00	6,500	5,000		11,500
all	Allowance for small crane / fork lift for piping work	1	lot					20,000.00	20,000.00			20,000	20,000
	TOTAL - Process Piping & Equipment				31786					2,066,090	1,774,780	28,000	3,868,870

Eichl
Engineers Inc. of CA

Client Name: Wine Institute
Job Number: 30913
Job Title: Fermenter VOC Emissions - LIVINGSTON UTILITIES

PRELIMINARY ESTIMATE

Estimated By: P.H.M.
Checked By: R.H.
Rev. 2 Date: 6/24/05

CODE	ITEM DESCRIPTION	QUANT	UNIT	MHR/ UNIT	TOTAL MHRS	UNIT COSTS $ / Hr	UNIT COSTS MAT'L	UNIT COSTS SUBCON.	UNIT COSTS TOTAL	TOTAL COSTS LABOR	TOTAL COSTS MAT'L	TOTAL COSTS SUBCON.	TOTAL
	Contingency												
2.00	Site Construction					25%	25%	25%				2,338	2,338
3.00	Concrete					30%	30%	30%				24,315	24,315
4.00	Masonry					25%	25%	25%					
5.00	Metals					25%	30%	25%				5,000	5,000
6.00	Wood & Plastics					25%	25%	25%					
7.00	Thermal & Moisture Protection					25%	25%	25%				41,150	41,150
8.00	Door & Windows					25%	25%	25%					
9.00	Finishes					25%	25%	25%					
10.00	Specialties					25%	25%	25%					
11.00	Equipment					25%	25%	25%					
12.00	Furnishings					25%	25%	25%					
13.00	Special Construction					25%	25%	25%					
14.00	Conveying Systems					25%	25%	25%					
15.00	Mechanical HVAC & Plumbing					25%	25%	25%					
16.00	Electrical					35%	35%	35%		47,452	63,627	3,150	114,229
17.00	Instruments & Controls					30%	30%	30%		23,693	45,180		68,873
18.00	Process Piping & Equipment					35%	35%	35%		723,132	621,173	9,800	1,354,105
	Design Fee Allowance							35%				307,584	307,584
	Construction Management Allowance							30%				52,729	52,729
	Plan Check & Permit Fee Allowance							25%				452	452
	Third Party Inspection Allowance							25%				339	339
	ROUND OFF	1											
	TOTAL - Contingency									794,276	729,980	446,856	1,971,112

BACT 5.4.14 Attachment B

Sizing and Purchase Costs for Control Devices

Carbon Adsorption Equipment Prices Based on Technical Assessment Document*				
Equipment Capacity			Equipment Cost	
VOC System	RTO Capacity Basis SCFM (Eichleay Study)	Absorption Capacity Basis SCFM (Without Combustion Air)	1994 Cost (TAD)	Cost Escalated to 2008 at 3% per Year
1	16,000	12,900	$268,655	$419,000
2	22,000	17,800	$305,546	$476,000
3	13,000	10,500	$247,914	$386,000
4	13,000	10,500	$247,914	$386,000
Totals				$1,667,000
* Technical Assessment Document p.77				
Water Scrubber Equipment Prices Based on STI Study*				
Case			Site Specific, CIP, Maximum Vapor Rate	
VOC System	RTO Capacity Basis SCFM (Eichleay Study)	Absorption Capacity Basis SCFM (Without Combustion Air)	2003 Cost (STI)	Cost Escalated to 2008 at 3% per Year
1	16,000	12,900	$63,822	$99,000
2	22,000	17,800	$71,387	$111,000
3	13,000	10,500	$59,411	$93,000
4	13,000	10,500	$59,411	$93,000
Totals			0	$396,000
* STI Study, p. 21				

Thermal Oxidizer Equipment Cost

Thermal Oxidizer Equipment Prices (Without Heat Recovery) Based on EPA Cost Manual Section 3.2, Chapter 2

Case		Equipment Cost	
VOC System	RTO Capacity Basis SCFM (Eichleay Study)	1988 Cost (EPA)	Cost Escalated to 2009 at 3% per Year
1	16,000	$100,600	$187,100
2	22,000	$108,400	$201,700
3	13,000	$95,800	$178,200
4	13,000	$95,800	$178,200
Totals			$745,200

Regenerative Thermal Oxidizer Equipment Prices (95% Heat Recovery) Based on Quotations Received in Eichleay Study

Case		Equipment Cost	
VOC System	RTO Capacity Basis SCFM (Eichleay Study)	2005 Cost (EPA)	Cost Escalated to 2009 at 3% per Year
1	16,000	$414,200	$466,200
2	22,000	$502,500	$565,600
3	13,000	$365,200	$411,000
4	13,000	$365,200	$411,000
Totals			$1,853,800

Refrigerated Condenser Sizing with Equipment Cost Based on EPA Cost Manual Section 3.1, Chapter 2						
VOC System	RTO Capacity Basis (Eichleay Study)	System Capacity less Combustion Air	Refrigerated Condenser Duty Btu/hour	Refrigerated Condenser Duty Tons	1990 Cost (EPA)	Cost Escalated to 2008 at 3% per Year
1	16000	12,900	3,909,000	326	$430,200	$754,400
2	22000	17,800	5,393,000	449	$526,300	$922,900
3	13000	10,500	3,182,000	265	$378,100	$663,000
4	13000	10,500	3,182,000	265	$378,100	$663,000
Total				1,306	$1,027,200	$3,003,300

Condenser Duty Calculation:						
Condenser Duty Basis:	Inlet vapor stream contains a maximum of 16,000 ppmv ethanol at 86 F					
	Condensing Temperature is -12 F, 90% of Ethanol Condensed					
Latent Heat Ethanol	369	Btu/lb				
Vapor Heat Capacity	0.21	Btu/lb				
Latent Heat water	1060	Btu/lb				

Condenser Heat Balance Based on 100 moles of Inlet Vapor:						
		Moles In	Moles Out		Enthalpy Change Btu/100 moles vapor	
		Vapor	Vapor	Liquid		
Ethanol Vapor		1.60	0.16	1.44	-24,594	
Water Vapor		4.20	0.00	4.20	-81,783	
CO2		94.20	94.20	0.00	-85,319	
Sub Total		100.00	94.36	5.64	-191,696	
Total		100.00	100.00		-191,696	
-191696	Btu/100 moles	=	-5.05	Btu/scf		

BACT 5.4.14 Attachment C

Utilities and Other Annual Costs

Costs for Utilities and Other Annual Operating Expenses

Costs for utilities and other annual costs are summarized in the tables on the following two pages. The basis and calculation of the costs is presented below:

Natural Gas – applicable to Cases 1, 2 and 5 only

Case 1: Thermal Oxidizer with no heat recovery

The estimate is based on the Eichleay Study which estimated the annual fuel consumption for 95% thermally efficient oxidizers at 67,412 therms/year = 6,741 MMBtu/year. At a natural gas cost of $8.00/MMBtu, the annual cost is 6,714 x $8.00 = $53,900 per year for all four regenerative thermal oxidizers with 95% heat recovery. Dividing by (1-95%) yields the fuel cost for a unit with zero heat recovery:

Case 1 Fuel Cost = $53900/(1-95%) = **$1,078,000 per year**

Case 2: Regenerative Thermal Oxidizers

Case 2 is the Eichleay Study case. Therefore,

Case 2 Fuel Cost = **$53,900 per year**

Case 5 – Carbon Adsorption

As calculated else where in this document, the carbon adsorption system will adsorb 350.62 tons per year of VOC's. Per the TAD, 11,800 lb of steam is required to recover I ton of ethanol. Given a boiler fuel requirement of 1,350 Btu/lb (based on absorbed boiler duty of 1,080 Btu/lb to produce 100 psig steam from 60 F water and an 80% combustion efficiency), annual fuel consumption for recovery of 350.62 tons ethanol per year is 11,800 x 350.62 x $1,350/10^6$ = 5,585 MMBtu/year.

Case 5 Fuel Cost = 5,585 MMBtu/year x $8.00/MMBtu = **$44,700 per year**

Electric Power

Cases 1 and 2 – Thermal Oxidizers

For these cases, power consumption is considered to be only that for the ID fans. Per the Eichleay study, annual power consumption for the ID fans associated with the thermal oxidizers is 586 kw per hour for the 120 day crush season. Annual cost at a unit power cost of $0.11/kwh is therefore

586 x 120 x 24 x $0.11 = **$185,600 per year**

Cases 4 and 5 – Carbon Adsorption and Water Scrubber

As in cases 1 an 2 above, only the ID fan power will be considered for these cases. However, these cases do not have to handle the extra 23.6% combustion air. Therefore, the electric power cost for the thermal oxidizer case will be divided by 1.236 to reflect lower flow rates. On this basis, Cases 3, 4 and 5 have an annual power cost of

$185,600/1.236 = **$150,200 per year (for cases 4 and 5)**

Case 3 – Refrigerated Condenser

Electric power for this case includes the same ID fan power consumption as Cases 4 and 5 and also requires power for operation of the refrigeration unit. This case requires 1,306 tons of refrigeration for the design case and a utilization factor of 60 % will be assumed. Additionally, a coefficient of performance of 3.5 will be assumed for the equipment. Power demand for a 120 day operating season is thus:

60% x 1,306/3.5 x 12,000 Btu/ton x 1 kW/3,413 Btu x 120 days x 24 hr/day
= 2,267,000 kWh/year

At $0.11/kWh, the cost for the refrigeration power is $249,400. Adding $150,200 for ID fan power (calculated above), total power coat for this case is **$399,600 per year**.

Water Disposal Cost – applicable to Case 4 and 5 only

Case 4 – Water Scrubber

Water disposal requirements and costs for Case 4 (water scrubber) are taken from the STI Study:

- Water Disposal Required: 6 gpm for each 5000 scfm air flow for 90 day crush season.
- Disposal Cost: $0.25/gallon

Total airflow for all four systems, corrected to subtract the combustion air, is (16,000 + 22,000 + 13,000 + 13,000)/1.236 = 51,800 scfm

Wastewater Rate = 51,800 scfm x 6 gpm/5,000 scf = 62 gpm

Annual wastewater generation = 62 gpm x 90 days x 1,440 minutes/day
= 8,035,000 gallons per year
Annual water disposal cost = 8,035,000 gallons x $0.25/gallon **=$ 2,008,800/yr**

Case 5 - Carbon Adsorption

Wastewater is generated from the regeneration of the carbon bed. Per the TAD, 11,800 lb steam is required to recover I ton of ethanol. Given liquid densities of 8.34 and 6.61 lb/gallon for water and ethanol respectively, the amount of wastewater produced per ton of ethanol recovered is (11,800/8.34) + (2,000/6.61) = 1,718 gal/ton ethanol.

As calculated in this BACT analysis, the carbon adsorption unit will adsorb 350.62 tons per year of VOC's. Produced wastewater is therefore 350.62 tons x 1,718 gal/ton = 602,400 gallons per year.

Disposal cost at $0.25/gal is 602,400 x $0.25 = **$150,600 per year**

Carbon Replacement Cost - applicable to Case 5 only

Per the TAD, activated carbon adsorbs 18% of its weight in ethanol. However, with regeneration, approximately 1/3 of the ethanol initially adsorbed stays on the carbon bed. In addition, due to the seasonal operation of a winery, the carbon is expected to have a lifetime of 10 years.

As calculated in this BACT analysis, the carbon adsorption unit will adsorb 350.62 tons per year of VOC's. Assuming this occurs over a 120 day crush season with three regenerations per day, the amount adsorbed per cycle is 350.62/(120 x 3) = 0.97 tons/cycle = 1,940 lb-VOC/cycle. Assuming a daily regeneration cycle and allowing for a dual bed for regeneration purposes, the amount of carbon required for the facility is 2 x 1,940/(18% x .667) = 32,300 lb carbon.

Given a cost of $2/lb for carbon and annualizing the cost over the 10 year life,

Carbon Replacement Cost = 0.163 x $2.00 x 32,300 = **$10,500 per year**.

Cooling Water Cost – applicable to Case 5 only (carbon adsorption)

Based on values presented in the TAD, the following parameters apply:

Cooling water consumption = 82,600 gallons of cooling water per ton of VOC adsorbed

Cooling Water Unit Cost = $0.53 per 1000 gallons

Given 350.62 tons of VOC adsorbed per year, annual cost for cooling water is

82,600 x 350.62 x $0.53/1000 = **$15.800 per year**

Utilities and Other Annual Costs					
Control Device	**Case 1 Thermal Ox**	**Case 2 RTO**	**Case 3 Refrigerated Cond.**	**Case 4 Water Scrubber**	**Case 5 Carbon Adsorption**
Natural Gas	$1,078,000	$53,900	$0	$0	$44,700
Electricity	$185,600	$185,600	$399,600	$185,600	$185,600
Water Disposal	$0	$0	$0	$2,008,800	$150,600
Cooling Water	$0	$0	$0	$0	$15,800
Carbon Replacement	$0	$0	$0	$0	$10,500
Total	**$1,263,600**	**$239,500**	**$399,600**	**$2,194,400**	**$407,200**

BACT 5.4.14 Attachment D

Eichleay Drawings

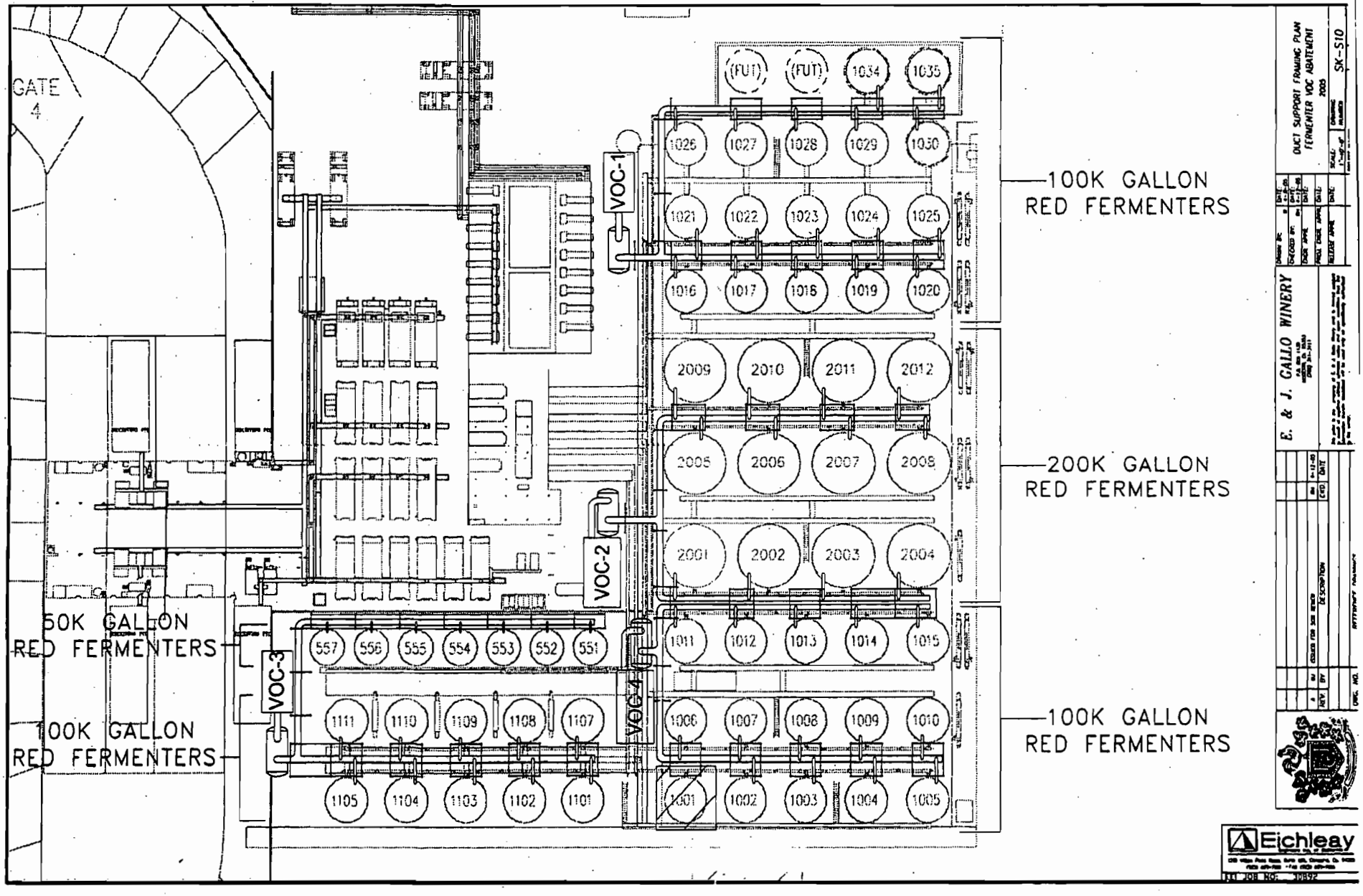
GATE 4
(FUT)
(FUT)
1034
1035
1026
1027
1028
1029
1030
1021
1022
1023
1024
1025
1016
1017
1018
1019
1020
2009
2010
2011
2012
2005
2006
2007
2008
2001
2002
2003
2004
1011
1012
1013
1014
1015
1006
1007
1008
1009
1010
1001
1002
1003
1004
1005
557
556
555
554
553
552
551
1111
1110
1109
1108
1107
1105
1104
1103
1102
1101
VOC-1
VOC-2
VOC-3
VOC-4
100K GALLON
RED FERMENTERS
200K GALLON
RED FERMENTERS
50K GALLON
RED FERMENTERS
100K GALLON
RED FERMENTERS
E. & J. GALLO WINERY
DUCT SUPPORT FRAMING PLAN
FERMENTER VOC ABATEMENT
2003
SK-S10
Eichleay

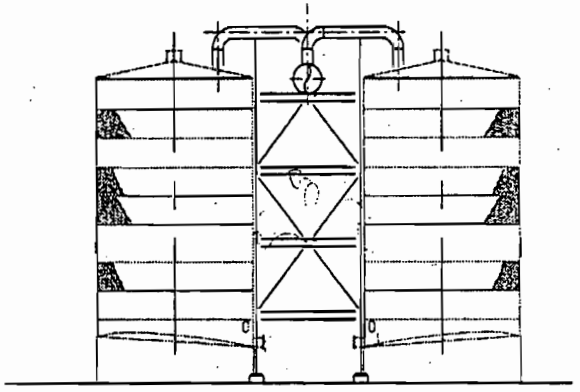

TYP. CROSS SECTION

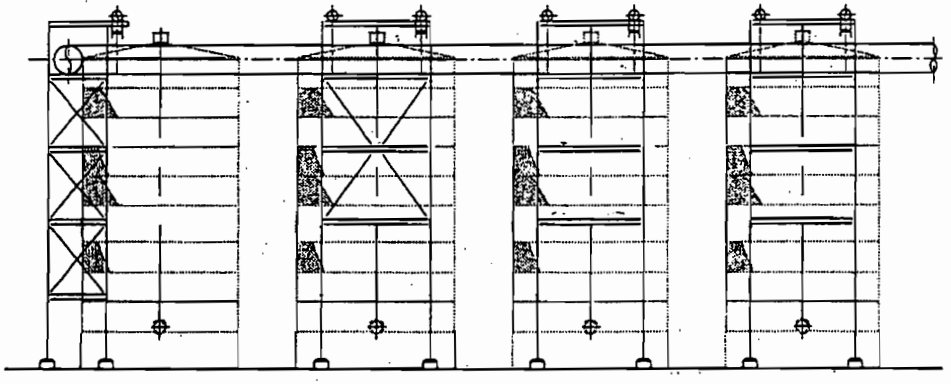

TYPICAL LOGITUDINAL SECTION

E. & J. GALLO WINERY

TYP. DUCT SUPPORT FRAMING DETAILS
FERMENTER VOC ABATEMENT
2005

SCALE: 1"=1'-0"
DRAWING NUMBER: SK-S12

REV.	BY	DESCRIPTION	CHD	DATE
A	RJ	ISSUED FOR JOB REVIEW	RJ	1-12-05

Eichleay

JOB NO: 30852

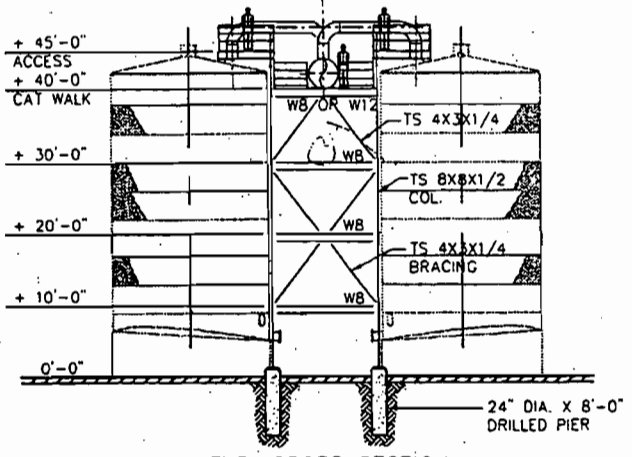

TYP. CROSS SECTION

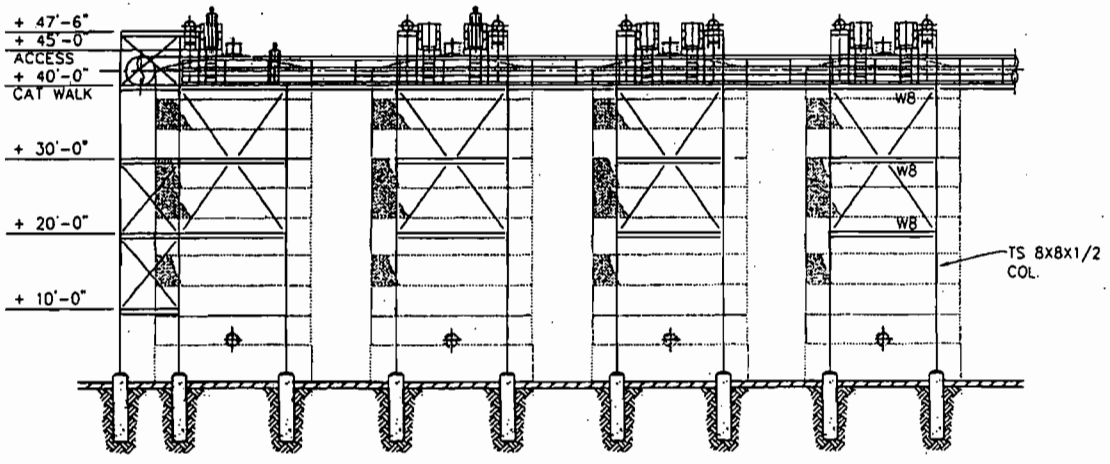

TYPICAL LOGITUDINAL SECTION

E. & J. GALLO WINERY

TYP. DUCT SUPPORT FRAMING DETAILS
FERMENTER VOC ABATEMENT
2003

SCALE:
DRAWING NUMBER: SK-S12
PROJECT NUMBER: 30892

REFERENCE DRAWINGS

PRELIMINARY

Eichleay

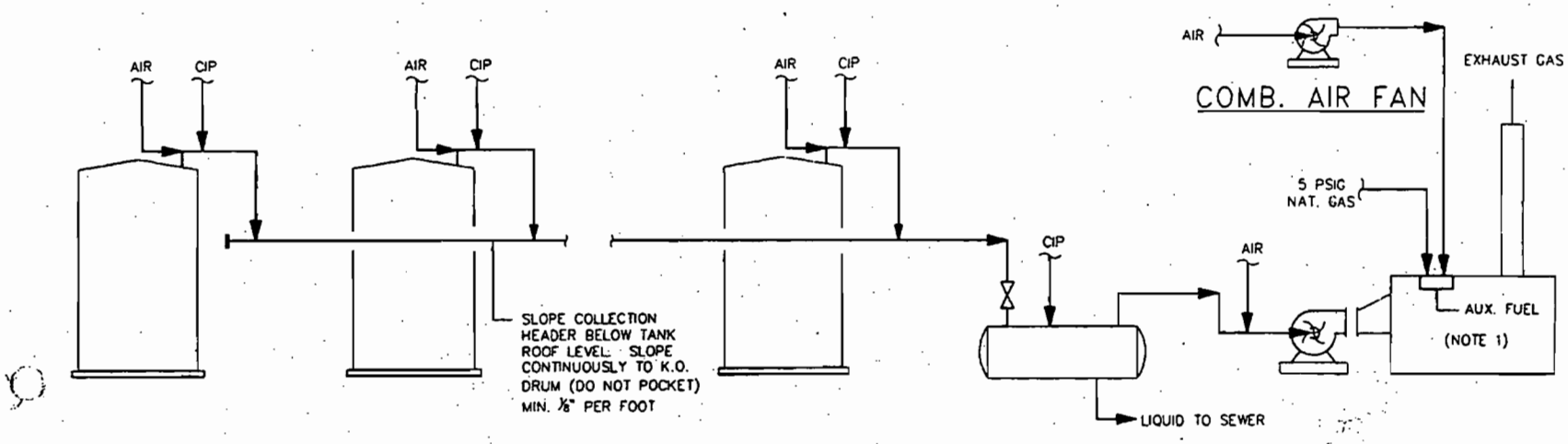

FERMENTER #1 FERMENTER #2 ..... FERMENTER #n VAPOR/LIQUID SEPARATOR (K.O.DRUM) BLOWER RTO UNIT

NOTES

1. RTO DILUTION AIR CONTROLS
   - A. ADD COOLING AIR AT ≥ 30% LEL (9,840 PPM ETHANOL)
   - B. ADD COMBUSTION AIR TO MAINTAIN ≥ 4% OXYGEN IN RTO VAPOR INLET
   - C. ADD SUPPLEMENTAL FUEL IF RTO VAPOR INLET IS < 3% LEL (984 PPM ETHANOL)

E. & J. GALLO WINERY

PROCESS FLOW DIAGRAM
FERMENTER VAPOR COLLECTION SYSTEM
FERMENTER VOC ABATEMENT

SK-30892-003

Eichleay

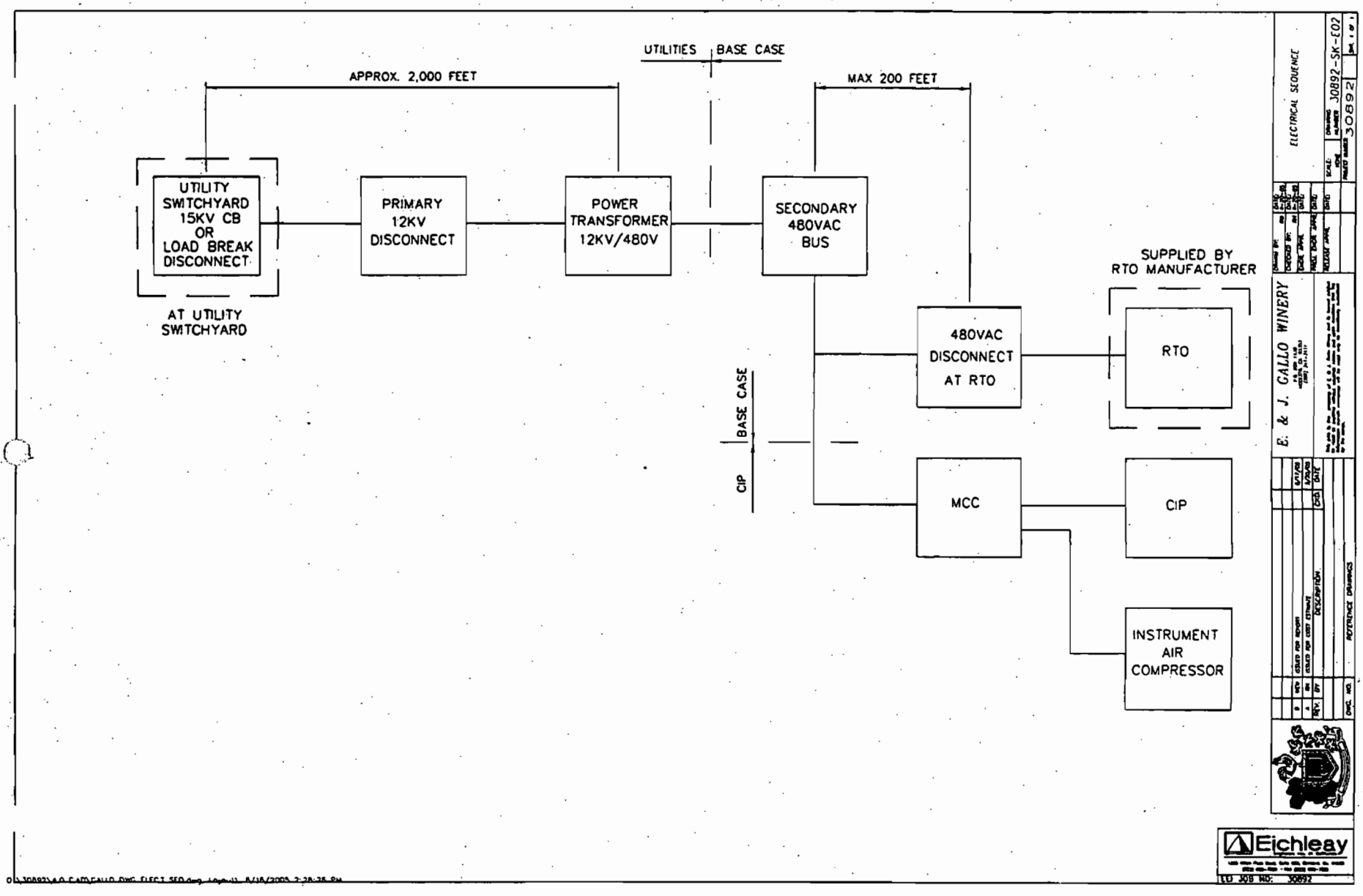
UTILITIES
BASE CASE
APPROX. 2,000 FEET
MAX 200 FEET
UTILITY SWITCHYARD 15KV CB OR LOAD BREAK DISCONNECT
AT UTILITY SWITCHYARD
PRIMARY 12KV DISCONNECT
POWER TRANSFORMER 12KV/480V
SECONDARY 480VAC BUS
SUPPLIED BY RTO MANUFACTURER
480VAC DISCONNECT AT RTO
RTO
BASE CASE
CIP
MCC
CIP
INSTRUMENT AIR COMPRESSOR
ELECTRICAL SEQUENCE
E. & J. GALLO WINERY
30892-SK-E02
30892
Eichleay
LEI JOB NO: 30892

E. & J. GALLO WINERY

ELECTRICAL
SINGLE LINE

DRAWING NUMBER 30892-SK-E01

PROJECT NUMBER 30892

REFERENCE DRAWINGS

Eichleay

JOB NO: 30892

BACT Attachment E

Eichleay Drawings

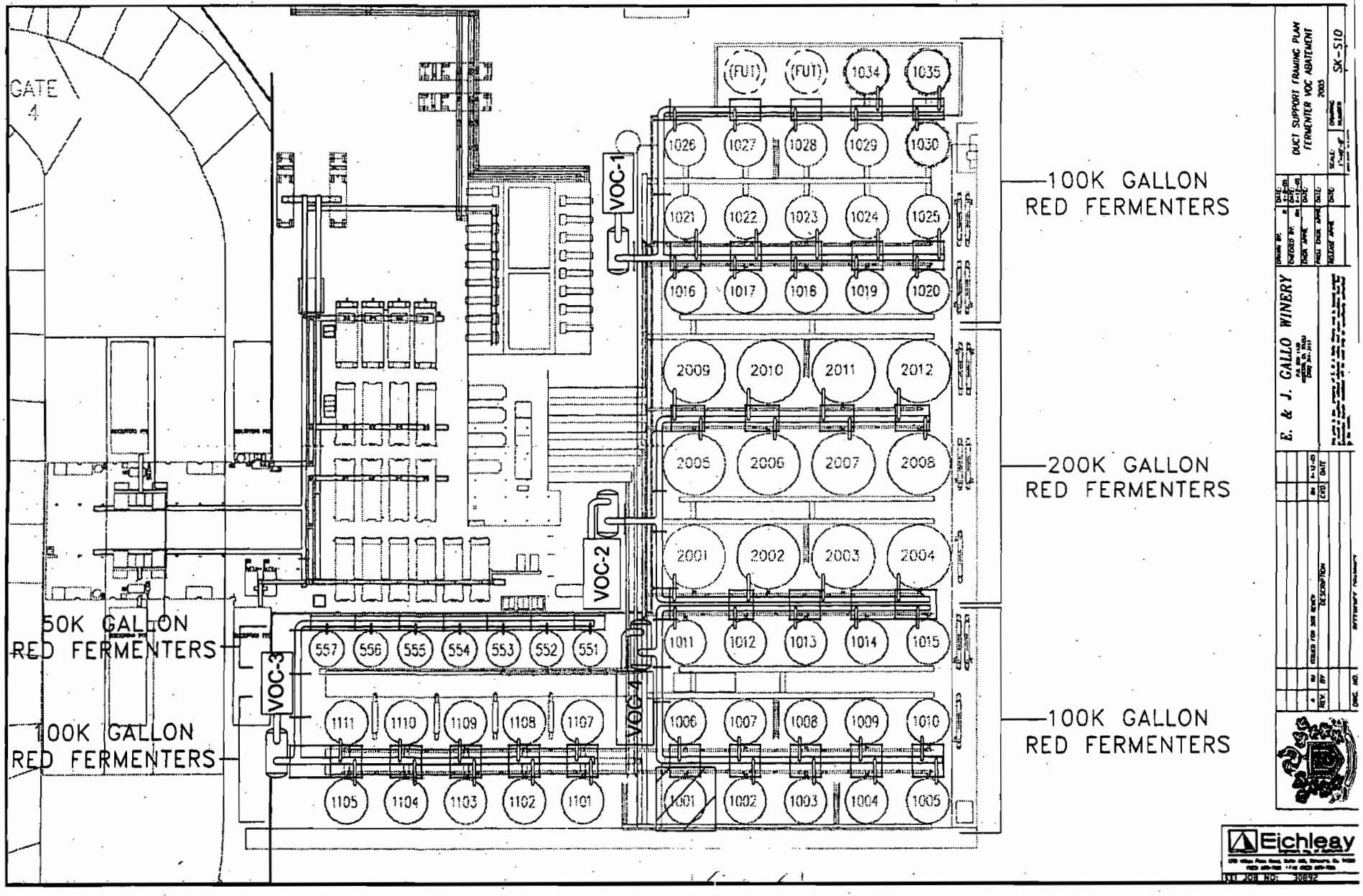
GATE 4
VOC-1
VOC-2
VOC-3
VOC-4
(FUT)
(FUT)
1034
1035
1026
1027
1028
1029
1030
1021
1022
1023
1024
1025
1016
1017
1018
1019
1020
2009
2010
2011
2012
2005
2006
2007
2008
2001
2002
2003
2004
1011
1012
1013
1014
1015
1006
1007
1008
1009
1010
1001
1002
1003
1004
1005
557
556
555
554
553
552
551
1111
1110
1109
1108
1107
1105
1104
1103
1102
1101
100K GALLON
RED FERMENTERS
200K GALLON
RED FERMENTERS
100K GALLON
RED FERMENTERS
50K GALLON
RED FERMENTERS
100K GALLON
RED FERMENTERS
E. & J. GALLO WINERY
DUCT SUPPORT FRAMING PLAN
FERMENTER VOC ABATEMENT
2005
SK-S10
Eichleay
JOB NO: 10892

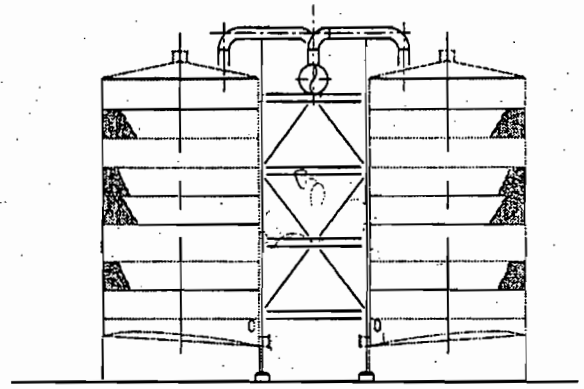

TYP. CROSS SECTION

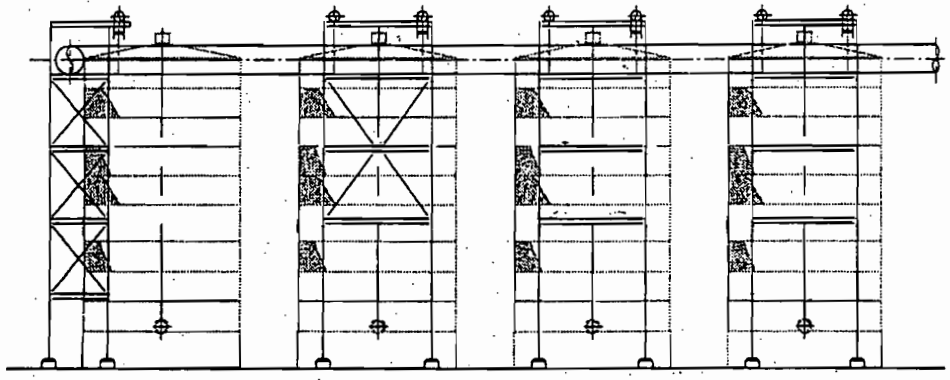

TYPICAL LOGITUDINAL SECTION

E. & J. GALLO WINERY

TYP. DUCT SUPPORT FRAMING DETAILS
FERMENTER VOC ABATEMENT
2005

SK-S12

Eichleay

TEI JOB NO: 30892

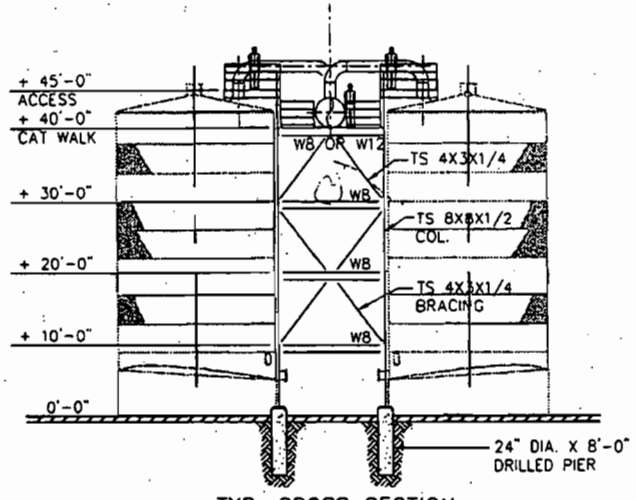

TYP. CROSS SECTION

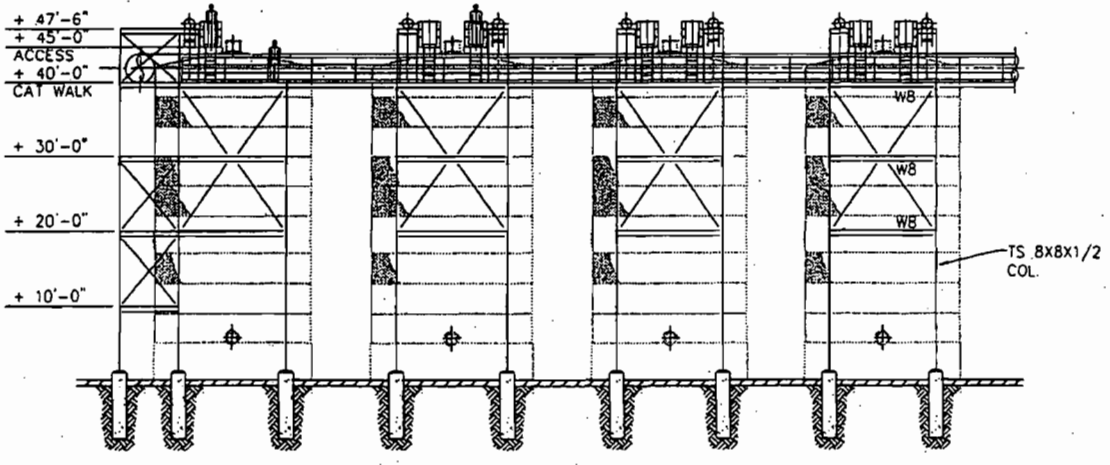

TYPICAL LOGITUDINAL SECTION

PRELIMINARY

E. & J. GALLO WINERY

TYP. DUCT SUPPORT FRAMING DETAILS
FERMENTER VOC ABATEMENT
2009

SK-S12

30892

Eichleay

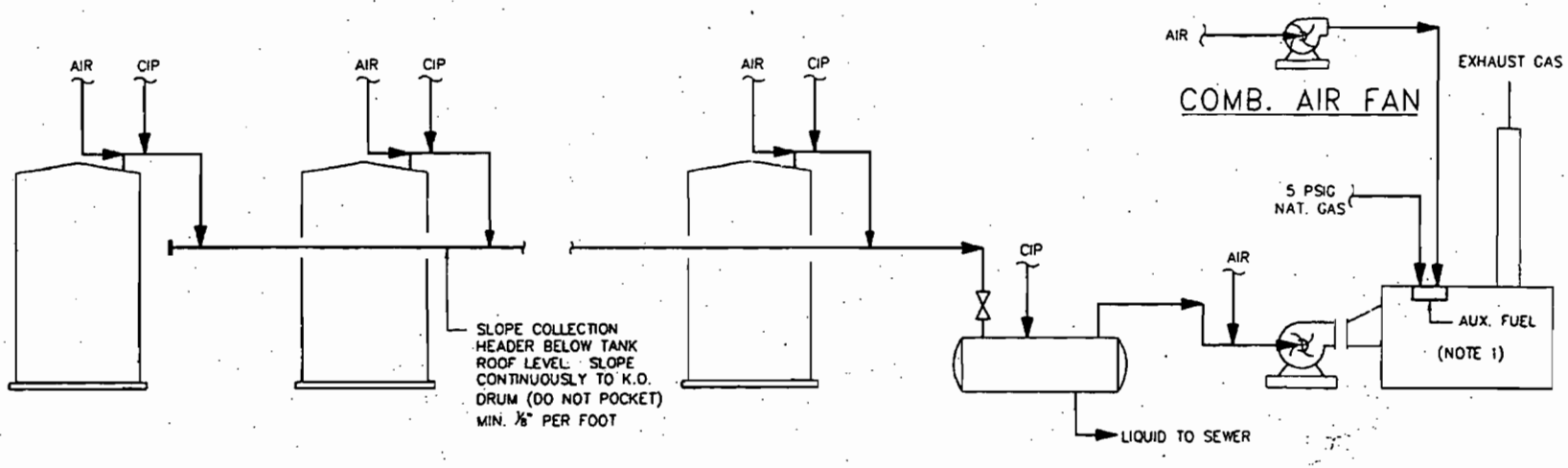

FERMENTER #1 FERMENTER #2 ..... FERMENTER #n VAPOR/LIQUID SEPARATOR (K.O.DRUM) BLOWER RTO UNIT

NOTES

1. RTO DILUTION AIR CONTROLS
   - A. ADD COOLING AIR AT ≥ 30% LEL (9,840 PPM ETHANOL)
   - B. ADD COMBUSTION AIR TO MAINTAIN ≥ 4% OXYGEN IN RTO VAPOR INLET
   - C. ADD SUPPLEMENTAL FUEL IF RTO VAPOR INLET IS < 3% LEL (984 PPM ETHANOL)

E. & J. GALLO WINERY

PROCESS FLOW DIAGRAM
FERMENTER VAPOR COLLECTION SYSTEM
FERMENTER VOC ABATEMENT

SK-10892-003

Eichleay

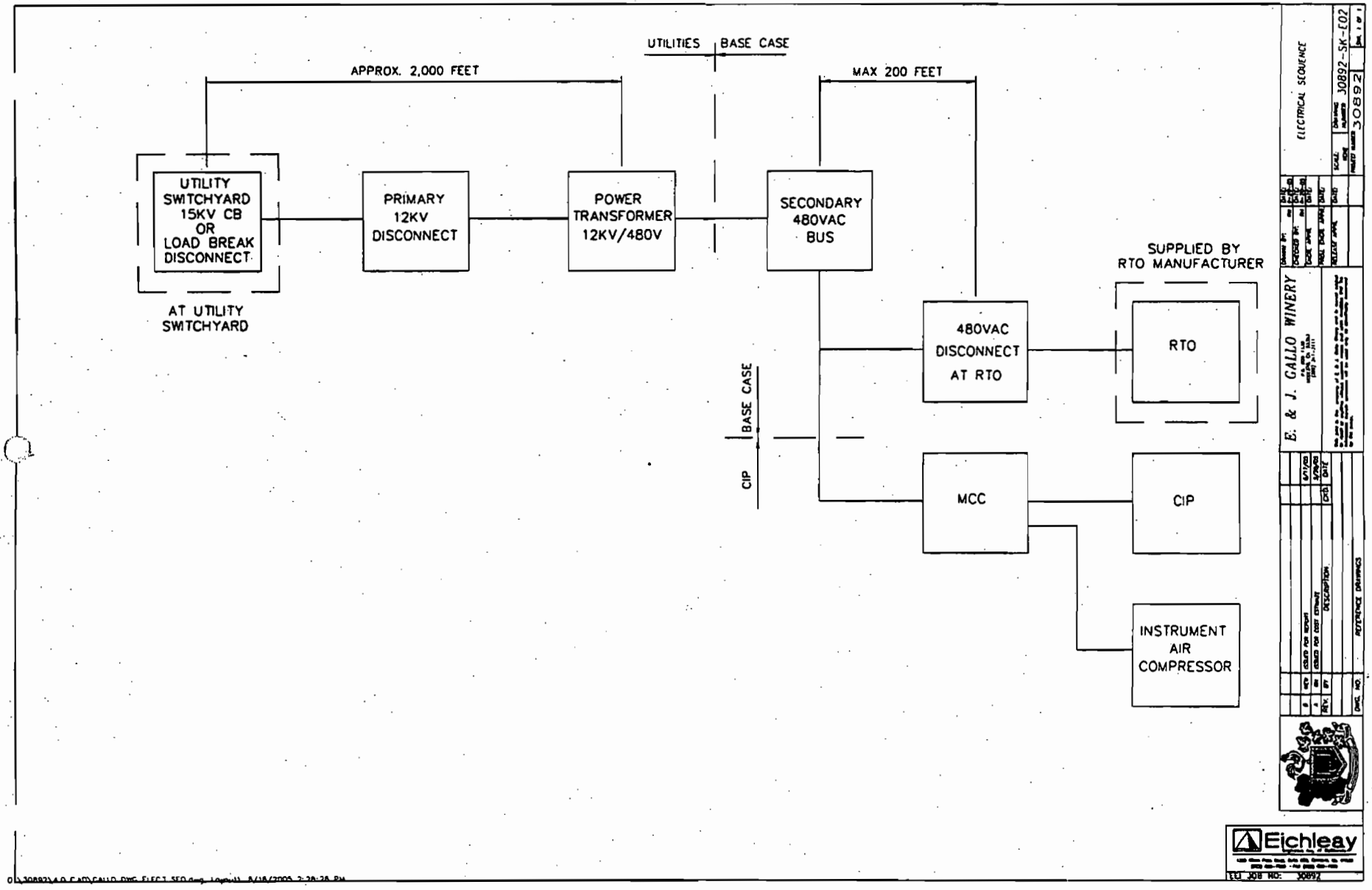
UTILITIES
BASE CASE
APPROX. 2,000 FEET
MAX 200 FEET
UTILITY SWITCHYARD 15KV CB OR LOAD BREAK DISCONNECT
AT UTILITY SWITCHYARD
PRIMARY 12KV DISCONNECT
POWER TRANSFORMER 12KV/480V
SECONDARY 480VAC BUS
SUPPLIED BY RTO MANUFACTURER
480VAC DISCONNECT AT RTO
RTO
BASE CASE
CIP
MCC
CIP
INSTRUMENT AIR COMPRESSOR
ELECTRICAL SEQUENCE
E. & J. GALLO WINERY
30892-SK-E02
30892
Eichleay

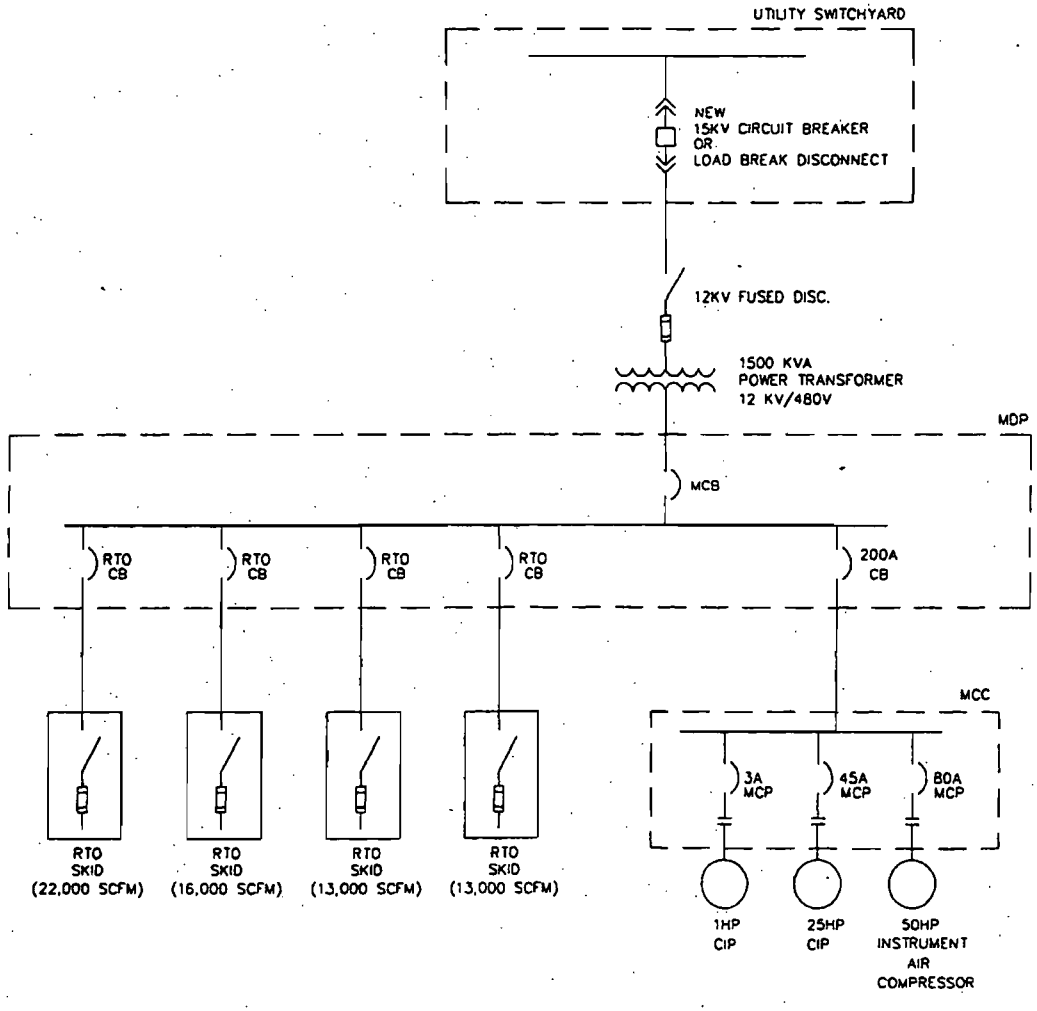

E. & J. GALLO WINERY

ELECTRICAL
SINGLE LINE

DRAWING NUMBER 30892-SK-E01

PROJECT NUMBER 30892

Eichleay

JOB NO: 30892

NOTES

1. EQUIPMENT SIZES SHOWN ARE FOR A TYPICAL WINERY WITH ABOUT 25 MILLION GALLONS OF RED FERMENTER CAPACITY
2. DRAWING IS DIAGRAMATIC ONLY. ALL VALVES AND INSTRUMENTS REQUIRED FOR NORMAL OPERATION ARE NOT SHOWN

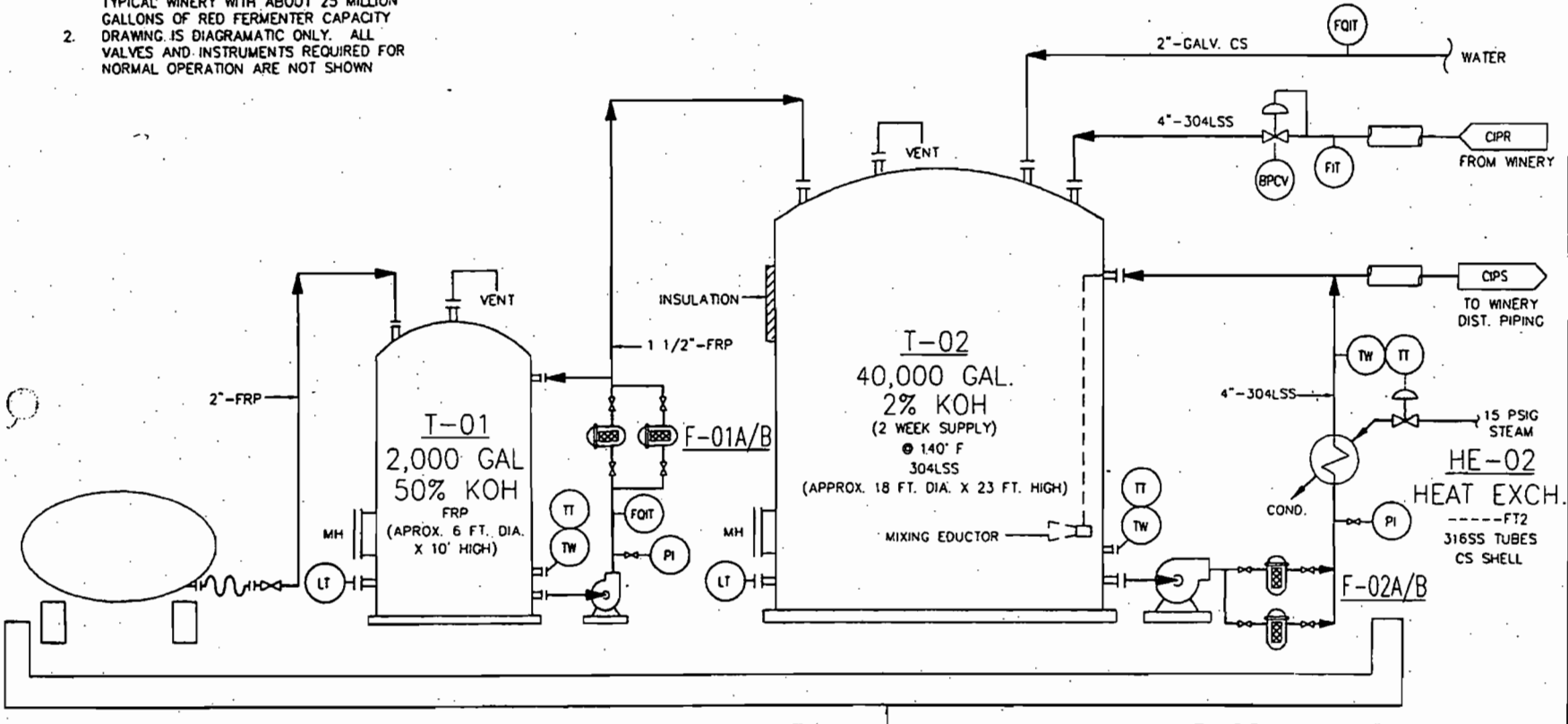

TANK TRUCK
50% KOH
(DELIVER 1500 GAL. ±EVERY 2 WEEKS)

P-01
TRANSFER PUMP
20 GPM @ 50 FT.
50% KOH
FRP
1 HP

F-01A/B
50%KOH FILTER
RATED 20 GPM/150PSIG
FRP
20 MICRON

CONCRETE CONTAINMENT WITH COATING
(APPROX. 40' X 60' X 2.5' CURB)

P-02
CIP PUMP
300 GPM @ 200 FT.
2% KOH
316SS
25 HP

F-02A/B
CIP FILTERS
RATED 300 GPM/150PSIG
304SS
20 MICRON

PROCESS FLOW DIAGRAM
BULK CIP MAKE-UP
FERMENTER VOC ABATEMENT
SK-30892-004

E. & J. GALLO WINERY

Eichleay

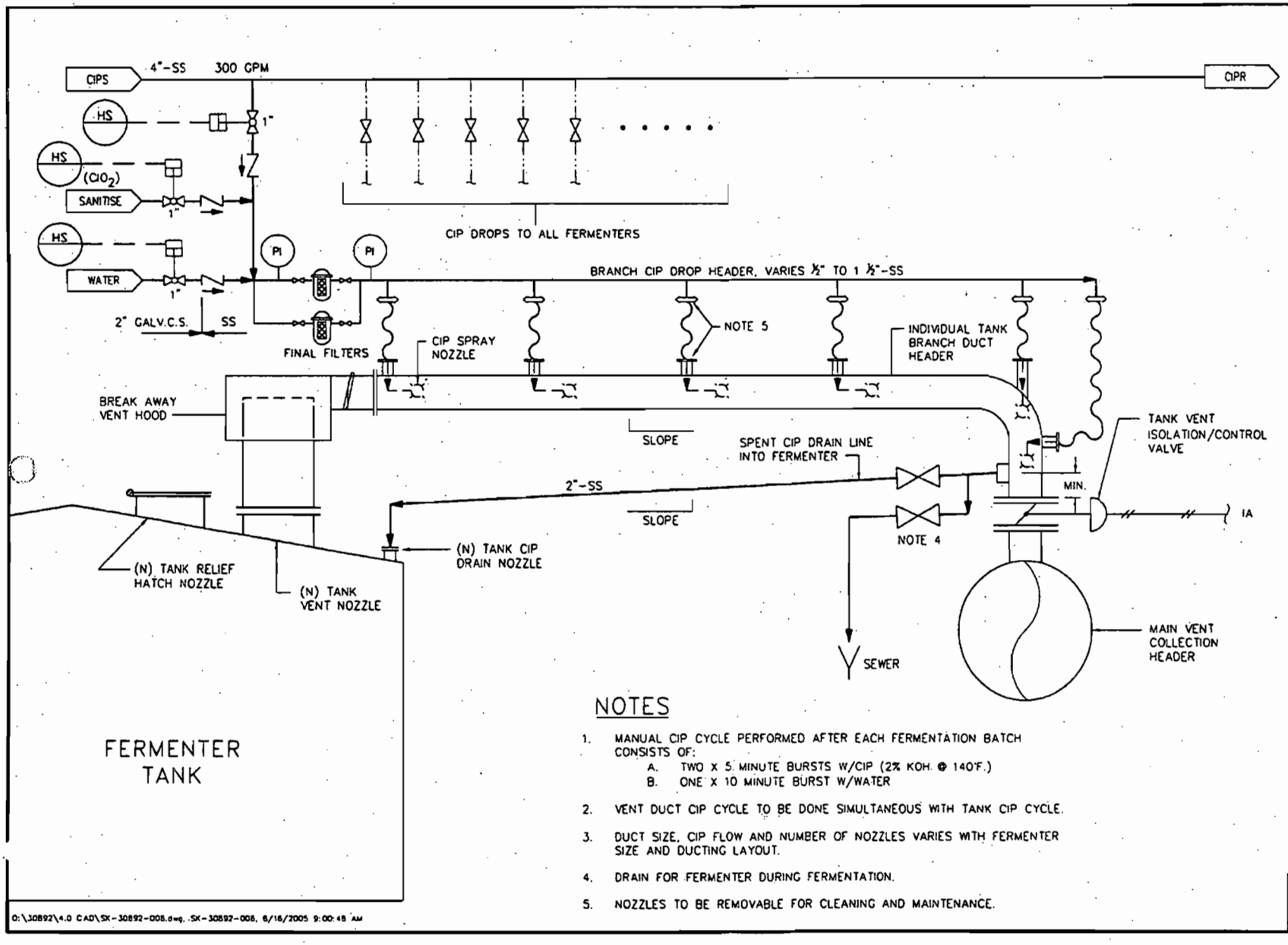

NOTES

1. MANUAL CIP CYCLE PERFORMED AFTER EACH FERMENTATION BATCH CONSISTS OF:
   A. TWO X 5 MINUTE BURSTS W/CIP (2% KOH. @ 140°F.)
   B. ONE X 10 MINUTE BURST W/WATER
2. VENT DUCT CIP CYCLE TO BE DONE SIMULTANEOUS WITH TANK CIP CYCLE.
3. DUCT SIZE, CIP FLOW AND NUMBER OF NOZZLES VARIES WITH FERMENTER SIZE AND DUCTING LAYOUT.
4. DRAIN FOR FERMENTER DURING FERMENTATION.
5. NOZZLES TO BE REMOVABLE FOR CLEANING AND MAINTENANCE.

TYPICAL FERMENTER DUCT CIP DETAIL
FERMENTER VOC ABATEMENT

E. & J. GALLO WINERY

SK-30892-006

REFERENCE DRAWINGS

Eichleay

EEI JOB NO: Jobs 30892

O:\30892\4.0 CAD\SK-30892-008.dwg, SK-30892-008, 6/16/2005 9:00:48 AM

Appendix F
BACT Guideline 5.4.13 and Top-Down Analysis for Winery Storage Tanks

Appendix H
BACT Guideline 5.4.13 and Top-Down Analysis for Winery Storage Tanks

Top Down BACT Analysis for VOC Emissions:

Step 1 - Identify All Possible Control Technologies

The SJVUAPCD BACT Clearinghouse guideline 5.4.13, 3rd quarter 2009, identifies achieved in practice and technologically feasible BACT for wine storage tanks as follows:

1) Insulation or Equivalent**, Pressure Vacuum Relief Valve (PVRV) set within 10% of the maximum allowable working pressure of the tank; "gas-tight" tank operation; and continuous storage temperature not exceeding 75 degrees F, achieved within 60 days of completion of fermentation.
2) Capture of VOCs and thermal or catalytic oxidation or equivalent (98% control)
3) Capture of VOCs and carbon adsorption or equivalent (95% control)
4) Capture of VOCs and absorption or equivalent (90% control)
5) Capture of VOCs and condensation or equivalent (70% control)

***Tanks made of heat-conducting materials such as stainless steel may be insulated or stored indoors (in a completely enclosed building, except for vents, doors and other essential openings) to limit exposure ot diurnal temperature variations. Tanks made entirely of non-conducting materials such as concrete and wood (except for fittings) are considered self-insulating.*

Step 2 - Eliminate Technologically Infeasible Options

None of the above listed technologies are technologically infeasible.

Step 3 - Rank Remaining Control Technologies by Control Effectiveness

Rank by Control Effectiveness			
Rank	Option	Control	Overall Capture & Control Efficiency[1]
1	2	Capture of VOCs and thermal or catalytic oxidation	98 %
2	3	Capture of VOCs and carbon adsorption	95 %
3	4	Capture of VOCs and absorption.	90 %
4	5	Capture of VOCs and condensation	70 %
5	1	Insulated tank, pressure/vacuum valve set within 10% of the maximum allowable working pressure of the tank, "gas tight" tank operation and 75 °F tank temperature control as defined in District Rule 4694. (Achieved in Practice and Industry Standard)	0 %

[1] Relative to "industry standard"

Step 4 - Cost Effectiveness Analysis

A cost-effective analysis is performed for each control technology which is more effective than meeting the requirements of District Rule 4694 plus tank insulation (achieved-in-practice BACT), as proposed by O'Neill. The cost-effectiveness analysis will be performed based on the following:

- Since the most cost effective approach will be achieved by installing a common control device for multiple tanks, the analysis will be based on this approach.
- To expand the scope and generality of this BACT, the cost-effectiveness analysis will be based on a hypothetical "industry-typical" storage tank operation consisting of a battery of twelve (12) storage tanks each with a capacity of 200,000 gallons. Total annual throughput for the hypothetical tank battery is 39.6 million gallons per year based on an individual annual throughput of 3,300,000 gallons per year each (equivalent to almost 17 turns per year of each storage tank versus an estimated industry average of 6 turns per tank[2]). Based on economies of scale, it is obvious that any control found to not be cost-effective at this level of throughput would be even less cost-effective at lower capacities typical for winery storage tanks.

Industry Standard

During the development of District Rule 4694, it was determined that use of pressure/vacuum valves and some level of refrigeration on wine storage tanks is a standard operation for large wineries in the San Joaquin Valley. Additionally, essentially all storage tanks are insulated. This was directly confirmed with four large wineries: Mission Bell (Madera), Gallo-Livingston, Bronco, and Robert Mondavi. Based on this, the wine storage tank VOC control requirements of District Rule 4694 and tank insulation are also determined to be "industry standard".

The emission factor for "industry standard" operation is determined based on Table 1 of the District's FYI-114, Estimating Emissions from Wine Storage Tanks, for an insulated storage tank with up to 20% ethanol content in the wine being stored:

E_f (industry standard) = 0.297 lb-VOC/1000 gal of wine throughput

Uncontrolled emissions for Twelve-Tank Battery

Uncontrolled Emissions = Gallons Throughput/year x 0.297 lb-VOC/1000 gallons

= (39.6 x 10^6 gal/year) x (0.297 lb-VOC/1000 gal)

Uncontrolled Emissions = 11,761 lb/year

Capture of VOCs with Thermal or Catalytic Oxidation/ Carbon Adsorption/Absorption or Condensation (Options 2,3,4, and 5)

A common feature of all of these options is that they require installation of a collection system for delivering the VOC's from the tanks to the common control device. The analysis below indicates that these options are not cost effective by showing that just the annualized direct cost for the ductwork of the collection system and supporting structural steel and foundations alone is too large, when considered at the District's cost

[2] Per discussions with the Wine Institute (Bob Calvin of Constellation Wines) during Rule 4694 development (8/16/05)

effectiveness threshold for VOC BACT, to justify the capital investment required by these options. This approach ignores additional major costs for the actual control device and its installation and for equipment sterilization systems for ductwork and control device, instrumentation and control systems for isolation of individual tanks in the battery, site specific factors due to limited plot space (known to be a significant factor at all wineries), and operating and maintenance costs for each system. Should all these additional cost factors be included, the calculated cost effectiveness would be substantially higher than indicated below.

a. Control Efficiency

Option 2 is capable of a 98% reduction in VOC emissions while the remaining options under consideration have lesser control efficiencies. Showing that all of the options under consideration are not cost effective at a 98% reduction level based on capital investment requirements of ductwork and steel alone is adequate since options other than thermal/catalytic oxidation would be even less cost effective at their actual (lower) reduction levels.

Annual Emission Reduction = Uncontrolled Emissions x 0.98
= 11,761 lb-VOC/year x 0.98
= 11,526 lb-VOC/year
= 5.76 tons-VOC/year

b. Capital Investment For Installation of a VOC Collection System

Design and Estimate Basis:

- The basis and approach for the capital cost estimate for ductwork and support steel is summarized in BACT Attachment 1.
- The collection system consists of stainless steel plate ductwork (stainless steel is required due to cleanliness and sterilization requirements for wine quality considerations and due to the food grade product status) with isolation valving, connecting twelve 200,000 gallon tanks to a common manifold system which ducts the combined vent to the common control device. The cost of dampers and isolation valving, installed in the ductwork, will not be included in the cost estimate.
- A minimum duct size is established at 6 inches diameter at each tank to ensure minimal backpressure of the tank during filling operations and to provide adequate strength for spanning between supports. The main header is 12" diameter to handle the potential for simultaneously venting all tanks based on a potential fill rate of 1000 gpm for each tank (per applicant) and a duct velocity of 2000 feet per minute.
- The ductwork is designed with features to facilitate clean-in-place (CIP) operation to allow for periodic sterilization procedures as required for food grade products. The CIP system includes strategically placed spray nozzles on the ductwork for injecting sterilizing solutions into the system. Cost impacts to install CIP systems to clean the ducting are not included in the cost estimate.
- The ductwork is supported on a structural steel piperack mounted on drilled concrete piers, running through the new tank battery. Ducting elevations are established to allow continuous free draining to the separator located at the control device.
- Unit Installed Costs for Ductwork: A direct cost estimate for 12" diameter stainless steel ductwork, installed in a San Joaquin Valley winery, was taken from a study

prepared by Eichleay Engineering for the Wine Institute in conjunction with development of District Rule 4694.[3] The estimate is based on 2nd quarter 2005 dollars, and includes fittings, miscellaneous duct supports and other materials plus field labor costs required to install the ductwork, but does not include other associated indirect costs such as construction management, engineering, owner's cost, contingency, etc. BACT Attachment 1 presents the development of unit installed costs for stainless steel ducting based on the costs derived from the Eichleay estimate.

- Linear feet of ducting required was extracted from the Eichleay Estimate for a similar system at Gallo-Livingston (see BACT Attachment 1).
- Costs for structural steel supports and foundations were extracted from the Eichleay Estimate for a similar system at Gallo-Livingston (see BACT Attachment 1).
- Sales tax of 8% was applied to all materials.
- Indirect costs include Engineering, Construction Expense and Contractor's Fee and Contingency. Factors for these costs are taken from Peters & Timmerhaus[4].
- Capital costs taken from the Eichleay estimate are 2005 dollars. These are escalated to 2011 based on 2% overall escalation per year.

Capital Investment (for ductwork and steel supports)

Fixed Capital Investment is summarized in the following table:

[3] Eichley Engineers of California, Fermenter VOC Emissions Control Cost Estimate (Revision 1), Eichleay Project Numbers 30892 and 30913, June 30, 2005

[4] Peters & Timmerhaus, Plant Design and Economics for Chemical Engineers, 2nd Edition, McGraw-Hill, 1968, p.140.

Fixed Capital Investment for Options 2, 3, 4 and 5									
Item	Qty	Unit	Unit Material Cost	Total Item Material Cost	Unit Labor Cost	Total Item Labor Cost	Unit Subcontract Price	Total Item Subcontract Cost	Total Item Direct Cost
Direct Cost									
6" Dia. Ducting	75	ft	$32.11	$2,408	$29.20	$2,190			$4,598
12" Dia. Ducting	870	ft	$75.33	$65,537	$68.49	$59,586			$125,123
Drilled Piers	32	ea.					$1,000.00	$32,000	$32,000
Structural Steel Supports	1	lot	$45,273	$287,630	$45,273	$45,273			$332,903
Direct Cost Subtotals				$355,575		$107,049		$32,000	$494,624
Sales Tax				$28,446					$28,446
Total Direct Cost				$384,021		$107,049		$32,000	$523,070
Indirect Costs									
Engineering @ 15% of Direct Cost									$78,461
Construction Expense and Contractor's Fee @ 20% of Direct Cost									$104,614
Contingency @ 15% of Fixed Capital Investment									$124,614
Fixed Capital Investment (2005 Cost)									$830,759
Escalation to 2011 @ 2%/year									$104,810
Fixed Capital Investment (2009 Cost)									$935,569

Annualized Capital Investment and Cost Effectiveness (based on ductwork):

Annualized Capital Investment = Initial Capital Investment x Amortization Factor

Amortization Factor = 0.163 per District policy, amortizing over 10 years at 10%

Therefore,

Annualized Capital Investment = $935,569 x 0.163 = $152,497

Cost Effectiveness = Annualized Cost/Annual Emission Reductions

Cost Effectiveness = $152,409/5.76 tons-VOC = $26,500/ton-VOC

As shown above, the cost of VOC reduction by capture of VOCs with thermal or catalytic oxidation, carbon adsorption, absorption or condensation would be greater than the $17,500/ton cost effectiveness threshold for VOC in the District BACT policy, based only on the direct cost required for the collection ducting. Therefore these options are not cost-effective and will not be considered for this project.

Step 5 - Select BACT

All identified feasible options with control efficiencies higher than the option proposed by the facility have been shown to not be cost effective. The facility has proposed Option 1, insulated tank, pressure/vacuum valve set within 10% of the maximum allowable working pressure of the tank, "gas tight" tank operation and achieve and maintain a continuous storage temperature not exceeding 75 °F within 60 days of completion of fermentation. These BACT requirements will be placed on the ATC as enforceable conditions.

Attachments:

BACT 5.4.13 Attachment 1: Development of Direct Costs for Installation of a VOC Collection System on a Battery of Wine Storage Tanks
BACT 5.4.13 Attachment 2: Plot Plan for Gallo-Livingston (Eichleay Study)
BACT 5.4.13 Attachment 3: Ducting Costs for VOC-2 (Eichleay Study)
BACT 5.4.13 Attachment 4: Structural Steel Costs for VOC-2 (Eichleay Study)
BACT 5.4.13 Attachment 5: Foundation Costs for VOC-2 (Eichleay Study)

BACT 5.4.13 Attachment 1

Development of Direct Costs for Installation of a VOC Collection System on a Battery of Wine Storage Tanks

Background

During the development of District Rule 4694 (Wine Fermentation and Storage Tanks), The Wine Institute commissioned a study by Eichleay Engineers of California to develop costs for installation of VOC controls on all wine fermentation tanks at the Gallo winery located at Livingston, CA. The SJVAPCD participated in development of the study and in the review of the final draft. The District reviewed this estimate (Eichleay study) in conjunction with the development of District Rule 4694 (see Appendix C, Final Draft Staff Report - Rule 4694, December 15, 2005). The District's review indicated that, although the District took issue with various scope elements of the overall estimate, the estimating methodology employed appears to be fundamentally sound and follows accepted practice in the engineering and construction industry, accurately estimating the material quantities required for the stated scope and applying reasonable unit rates and costs for materials and labor for development of direct costs.

The Eichleay study developed detailed direct cost estimates for four separate tank batteries at Gallo-Livingston; VOC-1, '-2, '-3 and '-4 (see plot diagram in Attachment A). The direct cost estimate scope for each battery included a stainless steel ducting manifold system connected to a VOC control device and structural steel ducting supports with associated foundations. VOC-2 is a tank battery consisting of twelve (12) 200,000 gallon capacity tanks, identical to the hypothetical "industry-typical" tank battery installation which forms the basis for the cost effectiveness calculations for this BACT determination. The estimates of ducting, steel supports and foundations prepared in the Eichleay study for VOC-2 can be used as a basis to establish costs for the cost effectiveness evaluation required by this BACT determination.

Approach and Estimate Basis

Ducting

Attachment B is the detailed direct cost estimate from the Eichleay study for ducting for VOC-2 (annotated to indicate the required subtotals). Since VOC-2 at Gallo-Livingston consists of twelve fermentation tanks rather than storage tanks, the diameter of the estimated ductwork is larger than required for storage-only tanks due to the much larger vent rate from fermentation. However, since the tank sizes and layout considerations would not be affected by tank utilization, the Eichleay estimate of total linear footage and duct fittings ductwork can be utilized directly. The estimate details in Attachment B are utilized in the following manner to develop ducting costs for the "industry typical" tank battery:

- Linear feet of ductwork required is taken directly from the Eichleay estimate for VOC-2 (Attachment B). Linear feet required for individual branch connections to each tank is given by the footage of 12" diameter ducting while the linear footage for the main header is represented by the balance of the ductwork for VOC-2. Based on this approach, 75 linear feet of ducting is required for branch connections to the tanks while 870 feet of ducting is required for the main headers and the ducting run to the control device. Since the "industry-typical" ducting for storage tanks has been determined to be 6" diameter for branch connections and 12" diameter for the main

header, the following material requirements are established for the "industry-typical" storage tank battery:

6" diameter ducting: 75 linear feet
12" diameter ducting: 870 linear feet

- Unit direct cost ($ per foot) of 12" diameter ducting can be determined by adding the labor and material costs required and dividing by the total linear footage of the particular diameter of ducting included in the estimate. For the 75 linear feet of 12" diameter ducting included in the Eichleay estimate for VOC-2, total labor and material costs were estimated at $5,137 and $5,650 respectively. Dividing each figure by 75 yields the unit labor and material costs for 12" diameter ducting:

  Unit labor cost for 12" ducting: $68.49/ft
  Unit material cost for 12" ducting: $75.33/ft

- The Eichleay estimate did not include estimates of direct cost for 6" diameter duct. Therefore, it is necessary to develop a cost by appropriate factoring of the 12" diameter cost. To adjust the direct cost to a 6" system, cost equations for stainless steel plate ductwork are taken from the EPA Air Pollution Control Manual, Section 2, Chapter 1, Table 1.9, which indicates a cost equation for stainless steel plate duct as follows:

  $$\text{Duct Cost} = 6.29 \times (\text{Duct Diameter}_{\text{inches}})^{1.23}$$

  Using this equation form, it is apparent the relative cost of 6" duct versus 12" duct can be calculated as follows:

  $$\text{6" Duct Cost} = \text{12" Duct Cost} \times (6/12)^{1.23}$$

  Since the EPA cost manual develops total direct cost based on applying additional factors to the duct cost, the use of the above factor for adjustment of the total direct cost is consistent with EPA cost estimation methods.

  Therefore,

  $$\text{Unit Labor Cost for 6" Duct} = \$68.49 \times (6/12)^{1.23} = \$29.20/\text{linear foot}$$

  $$\text{Unit Material Cost for 6" Duct} = \$75.33 \times (6/12)^{1.23} = \$32.11/\text{linear foot}$$

Structural Steel

- Structural steel cost can be assumed to be the same for the "industry-typical" system as for VOC-2 since the heights and sizes of structure will be the same. Attachment C is the Eichleay estimate of structural steel required for VOC-2, annotated to show required subtotal. Based on this approach, structural steel cost for the industry-typical" case is as follows:

  Purchased Structural Steel: $287,630

Labor for Erection of Structural Steel: $45,273

Foundations

- Cost for foundations for the structural steel towers can be assumed to be the same for the "industry-typical" system as for VOC-2 since the heights and sizes of structure are assumed to be the same. Attachment D is the Eichleay estimate of the foundations required for VOC-2, annotated to show required subtotal. Pricing is based on a subcontract price including labor and materials. Based on this approach, 32 drilled concrete piers are required at a subcontract cost of $1,000 each.

BACT 5.4.13 Attachment 2
Plot Plan for Gallo-Livingston (Eichleay Study)

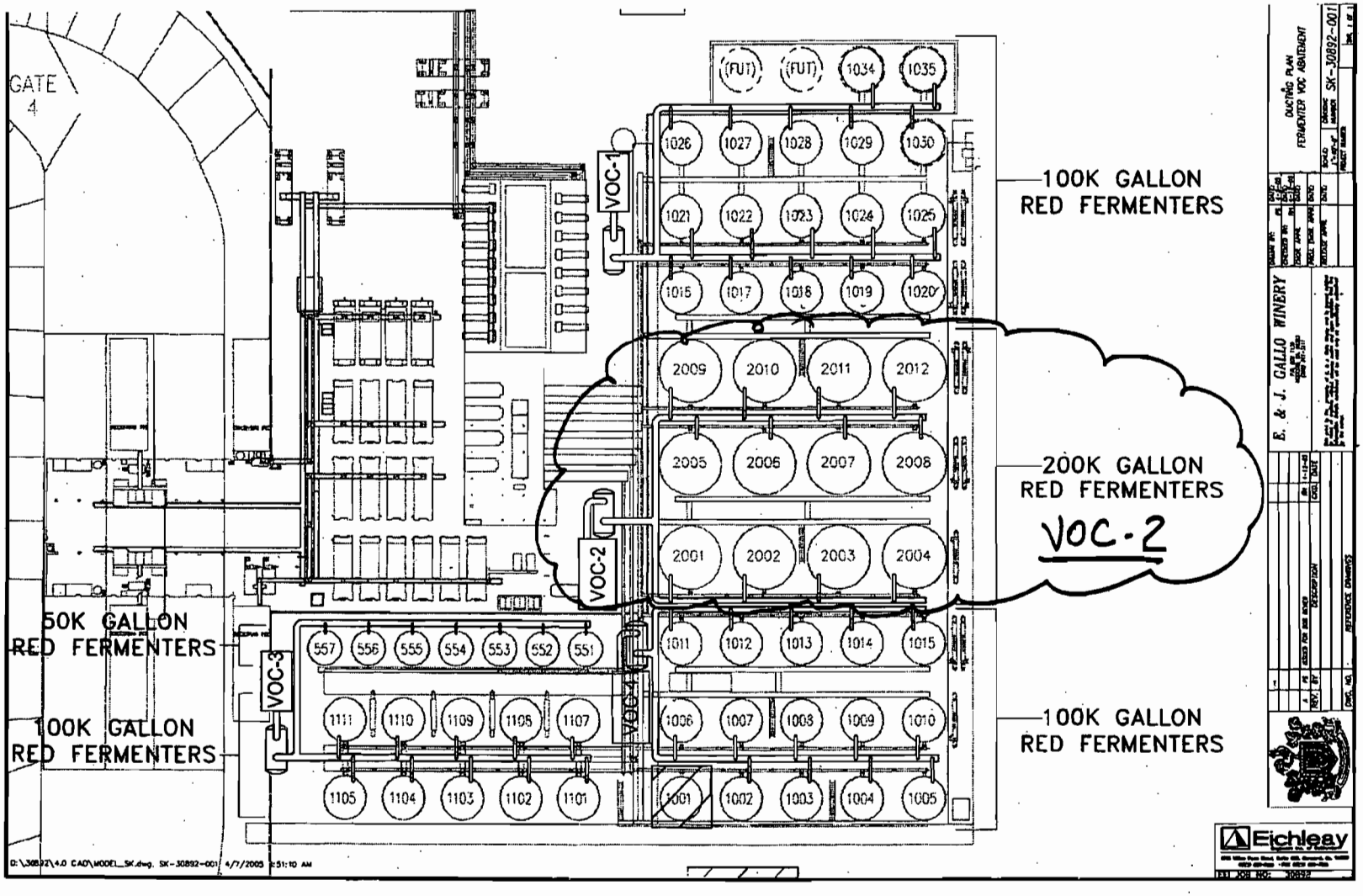
GATE 4
VOC-1
VOC-2
VOC-3
VOC-4
100K GALLON
RED FERMENTERS
200K GALLON
RED FERMENTERS
VOC-2
100K GALLON
RED FERMENTERS
50K GALLON
RED FERMENTERS
100K GALLON
RED FERMENTERS
(FUT)
(FUT)
1034
1035
1026
1027
1028
1029
1030
1021
1022
1023
1024
1025
1015
1017
1018
1019
1020
2009
2010
2011
2012
2005
2006
2007
2008
2001
2002
2003
2004
1011
1012
1013
1014
1015
1006
1007
1008
1009
1010
1001
1002
1003
1004
1005
557
556
555
554
553
552
551
1111
1110
1109
1105
1107
1105
1104
1103
1102
1101
E. & J. GALLO WINERY
DUCTING PLAN
FERMENTER VOC ABATEMENT
SK-30892-001
Eichleay

BACT 5.4.13 Attachment 3
Ducting Costs for VOC-2 (Eichleay Study)

Eichleay Engineers Inc. of CA

Client Name: Wine Institute
Job Number: 30913
Job Title: Fermenter VOC Emissions - Livingston West Side Fermenters

PRELIMINARY ESTIMATE

Estimated By: P.H.M.
Checked By: R.H.
Rev. 2 **Date:** 6/24/05

CODE	ITEM DESCRIPTION	QUANT	UNIT	MHR/ UNIT	TOTAL MHRS	UNIT COSTS $ / Hr	MAT'L	SUBCON.	TOTAL	TOTAL COSTS LABOR	MAT'L	SUBCON.	TOTAL
1	Bolt up	100	ea	6.5	650	65.00			422.50	42,250			42,250
1	Handle	96	ea	7.2	691.2	65.00			468.00	44,928			44,928
1	Install	20	lot	3	60	65.00			195.00	3,900			3,900
	VOC-2												
2	12" Duct	75	ft				62.00		62.00		4,650		4,650
2	12" Duct misc. fittings	1	lot				1,000.00		1,000.00		1,000		1,000
2	Bolt up	21	ea	1.5	31.5	65.00			97.50	2,048	5,650		2,048
2	Handle	19	ea	2.08	39.52	65.00			135.20	2,569			2,569
2	Install	4	lot	2	8	65.00			130.00	520			520
2	18" Duct	65	ft				86.00		86.00	5,137	5,590		5,590
2	18" Duct misc. fittings	1	lot				2,000.00		2,000.00		2,000		2,000
2	Bolt up	19	ea	3	57	65.00			195.00	3,705			3,705
2	Handle	17	ea	3.52	59.84	65.00			228.80	3,890			3,890
2	Install	3	lot	2	6	65.00			130.00	390			390
2	22" Duct	50	ft				99.00		99.00		4,950		4,950
2	22" Duct misc. fittings	1	lot				2,000.00		2,000.00		2,000		2,000
2	Bolt up	15	ea	4	60	65.00			260.00	3,900			3,900
2	Handle	13	ea	4.6	59.8	65.00			299.00	3,887			3,887
2	Install	3	lot	3	9	65.00			195.00	585			585
2	24" Duct	35	ft				106.00		106.00		3,710		3,710
2	24" Duct misc. fittings	1	lot				3,000.00		3,000.00		3,000		3,000
2	Bolt up	11	ea	4	44	65.00			260.00	2,860			2,860
2	Handle	9	ea	4.6	41.4	65.00			299.00	2,691			2,691
2	Install	2	lot	3	6	65.00			195.00	390			390
2	28" Duct	15	ft				119.00		119.00		1,785		1,785
2	28" Duct misc. fittings	1	lot				2,000.00		2,000.00		2,000		2,000
2	Bolt up	5	ea	5.5	27.5	65.00			357.50	1,788			1,788
2	Handle	4	ea	5.32	21.28	65.00			345.80	1,383			1,383

Labor & mat'l cost for 75' of 12" duct

Total Ducting > 12" dia = 870'

Eichleay Engineers Inc. of CA

Client Name: Wine Institute
Job Number: 30913
Job Title: Fermenter VOC Emissions - Livingston West Side Fermenters

PRELIMINARY ESTIMATE

Estimated By: P.H.M.
Checked By: R.H.
Rev. 2 **Date:** 6/24/05

CODE	ITEM DESCRIPTION	QUANT	UNIT	MHR/ UNIT	TOTAL MHRS	UNIT COSTS $ / Hr	UNIT COSTS MAT'L	UNIT COSTS SUBCON.	UNIT COSTS TOTAL	TOTAL COSTS LABOR	TOTAL COSTS MAT'L	TOTAL COSTS SUBCON.	TOTAL
2	Install To previous page	1	lot	3	3	65.00			195.00	195			195
2	30" Duct	25	ft				128.00		128.00		3,200		3,200
2	30" Duct misc. fittings	1	lot				2,000.00		2,000.00		2,000		2,000
2	Bolt up	8	ea	5.5	44	65.00			357.50	2,860			2,860
2	Handle	6	ea	5.32	31.92	65.00			345.80	2,075			2,075
2	Install	1	lot	3	3	65.00			195.00	195			195
2	32" Duct	265	ft				177.00		177.00		46,905		46,905
2	32" Duct misc. fittings	1	lot				4,500.00		4,500.00		4,500		4,500
2	Bolt up	68	ea	6	408	65.00			390.00	26,520			26,520
2	Handle	66	ea	6	396	65.00			390.00	25,740			25,740
2	Install	13	lot	3	39	65.00			195.00	2,535			2,535
2	42" Duct	415	ft				242.00		242.00		100,430		100,430
2	42" Duct misc. fittings	1	lot				25,000.00		25,000.00		25,000		25,000
2	Bolt up	115	ea	6.5	747.5	65.00			422.50	48,588			48,588
2	Handle	104	ea	7.12	740.48	65.00			462.80	48,131			48,131
2	Install	21	lot	4	84	65.00			260.00	5,460			5,460
	VOC-3												
3	6" Duct	25	ft				38.00		38.00		950		950
3	6" Duct misc. fittings	1	lot				500.00		500.00		500		500
3	Bolt up	7	ea	1	7	65.00			65.00	455			455
3	Handle	6	ea	1.4	8.4	65.00			91.00	546			546
3	Install	1	lot	1.5	1.5	65.00			97.50	98			98
3	10" Duct	35	ft				54.00		54.00		1,890		1,890
3	10" Duct misc. fittings	1	lot				1,000.00		1,000.00		1,000		1,000
3	Bolt up	11	ea	1.5	16.5	65.00			97.50	1,073			1,073
3	Handle	9	ea	1.72	15.48	65.00			111.80	1,006			1,006
3	Install	2	lot	2	4	65.00			130.00	260			260
3	12" Duct	70	ft				62.00		62.00		4,340		4,340

BACT 5.4.13 Attachment 4
Structural Steel Costs for VOC-2 (Eichleay Study)

Eichleay Engineers Inc. of CA

Client Name: Wine Institute
Job Number: 30913
Job Title: Fermenter VOC Emissions - Livingston West Side Fermenters

PRELIMINARY ESTIMATE

Estimated By: P.H.M.
Checked By: R.H.
Rev. 2 **Date:** 6/24/05

CODE	ITEM DESCRIPTION	QUANT	UNIT	MHR/ UNIT	TOTAL MHRS	UNIT COSTS $ / Hr	UNIT COSTS MAT'L	UNIT COSTS SUBCON.	UNIT COSTS TOTAL	TOTAL COSTS LABOR	TOTAL COSTS MAT'L	TOTAL COSTS SUBCON.	TOTAL
2	Install	1	lot	3	3	65.00			195.00	195			195
2	30" Duct	25	ft				128.00		128.00		3,200		3,200
2	30" Duct misc. fittings	1	lot				2,000.00		2,000.00		2,000		2,000
2	Bolt up	8	ea	5.5	44	65.00			357.50	2,860			2,860
2	Handle	6	ea	5.32	31.92	65.00			345.80	2,075			2,075
2	Install	1	lot	3	3	65.00			195.00	195			195
2	32" Duct	265	ft				177.00		177.00		46,905		46,905
2	32" Duct misc. fittings	1	lot				4,500.00		4,500.00		4,500		4,500
2	Bolt up	68	ea	6	408	65.00			390.00	26,520			26,520
2	Handle	66	ea	6	396	65.00			390.00	25,740			25,740
2	Install	13	lot	3	39	65.00			195.00	2,535			2,535
2	42" Duct	415	ft				242.00		242.00		100,430		100,430
2	42" Duct misc. fittings	1	lot				25,000.00		25,000.00		25,000		25,000
2	Bolt up	115	ea	6.5	747.5	65.00			422.50	48,588			48,588
2	Handle	104	ea	7.12	740.48	65.00			462.80	48,131			48,131
2	Install	21	lot	4	84	65.00			260.00	5,460			5,460
	VOC-3												
3	6" Duct	25	ft				38.00		38.00		950		950
3	6" Duct misc. fittings	1	lot				500.00		500.00		500		500
3	Bolt up	7	ea	1	7	65.00			65.00	455			455
3	Handle	6	ea	1.4	8.4	65.00			91.00	546			546
3	Install	1	lot	1.5	1.5	65.00			97.50	98			98
3	10" Duct	35	ft				54.00		54.00		1,890		1,890
3	10" Duct misc. fittings	1	lot				1,000.00		1,000.00		1,000		1,000
3	Bolt up	11	ea	1.5	16.5	65.00			97.50	1,073			1,073
3	Handle	9	ea	1.72	15.48	65.00			111.80	1,006			1,006
3	Install	2	lot	2	4	65.00			130.00	260			260
3	12" Duct	70	ft				62.00		62.00		4,340		4,340

To previous page

BACT 5.4.13 Attachment 5
Foundation Costs for VOC-2 (Eichleay Study)

Eichler
Engineers Inc. of CA

Client Name: Wine Institute
Job Number: 30913
Job Title: Fermenter VOC Emissions - Livingston West Side Fermenters

PRELIMINARY ESTIMATE

Estimated By: P.H.M.
Checked By: R.H.
Rev. 2 **Date:** 6/24/05

O:\30913\5.0 Design Documents\Estimates\Rev. 2\Living

CODE	ITEM DESCRIPTION	QUANT	UNIT	MHR/ UNIT	TOTAL MHRS	UNIT COSTS $ / Hr	UNIT COSTS MAT'L	UNIT COSTS SUBCON.	UNIT COSTS TOTAL	TOTAL COSTS LABOR	TOTAL COSTS MAT'L	TOTAL COSTS SUBCON.	TOTAL
	030 - Concrete												
	VOC -1 Duct sections												
1	Install drilled piers (20) rack #1	20	ea					1,000.00	1,000.00			20,000	20,000
1	Install drilled piers (20) rack #2	20	ea					1,000.00	1,000.00			20,000	20,000
1	Install drilled piers (42) for main rack inside plant	42	ea					1,500.00	1,500.00			63,000	63,000
1	Install drilled piers (46) for main rack outside plant	46	ea					700.00	700.00			32,200	32,200
1	Install drilled piers (32) for main rack by VOC's	32	ea					700.00	700.00			22,400	22,400
1	Install foundation for VOC-1 & tank	110	cy					450.00	450.00			49,500	49,500
	VOC -2 Duct sections												
2	Install drilled piers (16) rack #3	16	ea					1,000.00	1,000.00			16,000	16,000
2	Install drilled piers (18) rack #4	16	ea					1,000.00	1,000.00			16,000	16,000
2	Install foundation for VOC-1 & tank	110	cy					450.00	450.00			49,500	49,500
	VOC -3 Duct sections												
3	Install drilled piers (16) rack #6	16	ea					1,000.00	1,000.00			16,000	16,000
3	Install drilled piers (20) rack #7	20	ea					1,000.00	1,000.00			20,000	20,000
3	Install foundation for VOC-1 & tank	110	cy					450.00	450.00			49,500	49,500
	VOC -4 Duct sections												
4	Install drilled piers (0) rack #4		ea					1,000.00	1,000.00				
4	Install drilled piers (20) rack #5	20	ea					1,000.00	1,000.00			20,000	20,000
4	Install foundation for VOC-1 & tank	110	cy					450.00	450.00			49,500	49,500
	Allowance for building pad	3	cy					450.00	450.00			1,350	1,350
	TOTAL - Concrete											444,950	444,950

drilled piers

Appendix I
Compliance Certification

TRINCHERO
Family Estates

RECEIVED
MAR 28 2011
Permits Srvc
SJVAPCD

Dennis Roberts
San Joaquin Valley Air Pollution Control District
1990 E. Gettysburg Avenue
Fresno, CA 93726-0244

March 25, 2011

Dear Dennis

This is to certify that emission units at all facilities operated by Trinchero Family Estates/Sutter Home Winery are in compliance or are on a schedule for compliance with emission standards as set forth by the governing local regulatory authority for the California region is which they are located.

If you have any questions about this please do not hesitate to ask.

Sincerely,

Eric Jenssen
Vice President – Engineering
Trinchero Family Estates
Sutter Home Winery

CC: Jim Huntsinger, SVP-Production
Dave Henry, Sr. Prod. Admin.

Appendix J
Draft ATCs

San Joaquin Valley
Air Pollution Control District

AUTHORITY TO CONSTRUCT

DRAFT

PERMIT NO: N-7855-701-0 **ISSUANCE DATE:** DRAFT

LEGAL OWNER OR OPERATOR: SUTTER HOME WINERY
MAILING ADDRESS: P O BOX 248
ST HELENA, CA 94574-0248

LOCATION: 18667 N JACOB BRACK RD
LODI, CA 95242

EQUIPMENT DESCRIPTION:
202,638 GALLON WHITE WINE FERMENTATION TANK AND WINE STORAGE TANK (TANK 1200) WITH PRESSURE/VACUUM VALVE AND INSULATION

CONDITIONS

1. {98} No air contaminant shall be released into the atmosphere which causes a public nuisance. [District Rule 4102]
2. The VOC emissions rate for fermentation operations in this tank shall not exceed 1.62 lb/day per 1000 gallons of tank capacity. [District Rule 2201]
3. The ethanol content of wine stored in this tank shall not exceed 23.9 percent by volume. [District Rule 2201]
4. When this tank is used for wine storage, the daily tank throughput, in gallons, shall not exceed five times the maximum nominal tank capacity stated on the equipment description. [District Rule 2201]
5. Total combined annual VOC emissions from all wine fermentation and wine storage operations at this facility shall not exceed 292,950 lb. [District Rule 2201]
6. Combined annual VOC emissions from all wine storage operations shall be determined as the sum of the emissions for each individual wine movement based on the volume transferred in each wine movement and the batch-specific wine storage emission factor calculated using the equation(s) specified within this permit. [District Rule 2201]
7. The annual VOC wine storage emission factor (EF) for each wine transfer shall be selected from the following emission factors based on the ethanol content of the wine transferred: For wine with ethanol content less than 14 volume percent: EF = 0.198 lb-VOC/1000 gallons; For wine with ethanol content between 14 and 21 volume percent, EF = 0.314 lb-VOC/1000 gallons; For wine with ethanol content greater than 21 volume percent, EF = 0.363 lb-VOC/1000 gallon. [District Rule 2201]

CONDITIONS CONTINUE ON NEXT PAGE

YOU MUST NOTIFY THE DISTRICT COMPLIANCE DIVISION AT (209) 557-6400 WHEN CONSTRUCTION IS COMPLETED AND PRIOR TO OPERATING THE EQUIPMENT OR MODIFICATIONS AUTHORIZED BY THIS AUTHORITY TO CONSTRUCT. This is NOT a PERMIT TO OPERATE. Approval or denial of a PERMIT TO OPERATE will be made after an inspection to verify that the equipment has been constructed in accordance with the approved plans, specifications and conditions of this Authority to Construct, and to determine if the equipment can be operated in compliance with all Rules and Regulations of the San Joaquin Valley Unified Air Pollution Control District. Unless construction has commenced pursuant to Rule 2050, this Authority to Construct shall expire and application shall be cancelled two years from the date of issuance. The applicant is responsible for complying with all laws, ordinances and regulations of all other governmental agencies which may pertain to the above equipment.

Seyed Sadredin, Executive Director / APCO

DRAFT

DAVID WARNER, Director of Permit Services
N-7855-701-0 : Mar 23 2011 1:25PM -- ROBERTSD : Joint Inspection NOT Required

8. Total annual VOC emissions from wine fermentation operations shall be determined by the following formula: Total annual VOC emissions = (Total Annual Red Wine Production-gal) x (6.2 lb-VOC/1000 gal) + (Total Annual White Wine Production-gal) x (2.5 lb-VOC/1000 gal). [District Rule 2201]

9. When used for wine storage, this tank shall be equipped with and operated with a pressure-vacuum relief valve, which shall operate within 10% of the maximum allowable working pressure of the tank, operate in accordance with the manufacturer's instructions, and be permanently labeled with the operating pressure settings. [District Rules 2201 and 4694]

10. When used for wine storage, the pressure-vacuum relief valve and storage tank shall remain in a gas-tight condition, except when the operating pressure of the tank exceeds the valve set pressure. A gas-tight condition shall be determined by measuring the gas leak in accordance with the procedures in EPA Method 21. [District Rules 2201 and 4694]

11. The temperature of the wine stored in this tank shall be maintained at or below 75 degrees Fahrenheit. For each batch of wine, the operator shall achieve the storage temperature of 75 degrees Fahrenheit or less within 60 days after completing fermentation, and shall maintain records to show when the required storage temperature of 75 degrees Fahrenheit or less was achieved. [District Rules 2201 and 4694]

12. The average fermentation temperature of each batch of must fermented in this tank shall not exceed 95 oF, calculated as the average of all temperature measurements for the batch taken at least every 12 hours over the course of the fermentation. [District Rule 2201]

13. A Three-Year Compliance Plan that demonstrates compliance with the requirements of Section 5.1 of District Rule 4694 for each year of the applicable compliance period shall be submitted to the District by no later than December 1, 2012, and every three years thereafter on or before December 1. [District Rule 4694]

14. A Three-Year Compliance Plan Verification that demonstrates that the Three-Year Compliance Plan elements are in effect shall be submitted to the District by no later than July 1, 2013, and every three years thereafter on or before July 1. [District Rule 4694]

15. An Annual Compliance Plan Demonstration that shows compliance with the applicable requirements of this rule shall be submitted to the District by no later than February 1, 2012, and every year thereafter on or before February 1. [District Rule 4694]

16. Operators using CER to mitigate fermentation emissions shall perform all monitoring and recordkeeping, as established in their approved Three-Year Compliance Plan, and shall maintain all records necessary to demonstrate compliance. [District Rule 4694]

17. Operators using District Obtained Emission Reductions (DOER) shall submit payment of DOER and administrative fees to the District no later than March 1, of the first year in the applicable compliance period. [District Rule 4694]

18. For each batch of must fermented in this tank, the operator shall record the fermentation completion date, the total gallons of must fermented, the average fermentation temperature and the uncontrolled fermentation emissions and fermentation emission reductions (calculated per the emission factors given in District Rule 4694). The information shall be recorded by the tank Permit to Operate number and by wine type, stated as either red wine or white wine. [District Rules 2201 and 4694]

19. When used for wine storage, daily throughput records, including records of filling and emptying operations, the dates of such operations, a unique identifier for each batch, the volume percent ethanol in the batch, and the volume of wine transferred, shall be maintained. [District Rules 2201 and 4694]

20. When used for wine storage, the operator shall record, on a weekly basis, the total gallons of wine contained in the tank and the maximum temperature of the stored wine. [District Rule 4694]

21. Records of total annual fermentation and total annual storage emissions, including calculation methods and parameters used, shall be maintained. [District Rule 1070 and 2201]

22. Separate annual records of total red wine and total white wine produced by fermentation at this facility, based on values reported to the Alcohol and Tobacco Tax and Trade Bureau (TTB), U.S. Department of the Treasury, shall be maintained. [District Rule 1070 and 2201]

DRAFT

CONDITIONS CONTINUE ON NEXT PAGE

23. All records shall be retained on-site for a period of at least five years and made available for District inspection upon request. [District Rules 2201 and 4694]

DRAFT

San Joaquin Valley
Air Pollution Control District

AUTHORITY TO CONSTRUCT

DRAFT

PERMIT NO: N-7855-702-0 **ISSUANCE DATE:** DRAFT

LEGAL OWNER OR OPERATOR: SUTTER HOME WINERY
MAILING ADDRESS: P O BOX 248
ST HELENA, CA 94574-0248

LOCATION: 18667 N JACOB BRACK RD
LODI, CA 95242

EQUIPMENT DESCRIPTION:
202,638 GALLON WHITE WINE FERMENTATION TANK AND WINE STORAGE TANK (TANK 1201) WITH PRESSURE/VACUUM VALVE AND INSULATION

CONDITIONS

1. {98} No air contaminant shall be released into the atmosphere which causes a public nuisance. [District Rule 4102]
2. The VOC emissions rate for fermentation operations in this tank shall not exceed 1.62 lb/day per 1000 gallons of tank capacity. [District Rule 2201]
3. The ethanol content of wine stored in this tank shall not exceed 23.9 percent by volume. [District Rule 2201]
4. When this tank is used for wine storage, the daily tank throughput, in gallons, shall not exceed five times the maximum nominal tank capacity stated on the equipment description. [District Rule 2201]
5. Total combined annual VOC emissions from all wine fermentation and wine storage operations at this facility shall not exceed 292,950 lb. [District Rule 2201]
6. Combined annual VOC emissions from all wine storage operations shall be determined as the sum of the emissions for each individual wine movement based on the volume transferred in each wine movement and the batch-specific wine storage emission factor calculated using the equation(s) specified within this permit. [District Rule 2201]
7. The annual VOC wine storage emission factor (EF) for each wine transfer shall be selected from the following emission factors based on the ethanol content of the wine transferred: For wine with ethanol content less than 14 volume percent: EF = 0.198 lb-VOC/1000 gallons; For wine with ethanol content between 14 and 21 volume percent, EF = 0.314 lb-VOC/1000 gallons; For wine with ethanol content greater than 21 volume percent, EF = 0.363 lb-VOC/1000 gallon. [District Rule 2201]

CONDITIONS CONTINUE ON NEXT PAGE

YOU MUST NOTIFY THE DISTRICT COMPLIANCE DIVISION AT (209) 557-6400 WHEN CONSTRUCTION IS COMPLETED AND PRIOR TO OPERATING THE EQUIPMENT OR MODIFICATIONS AUTHORIZED BY THIS AUTHORITY TO CONSTRUCT. This is NOT a PERMIT TO OPERATE. Approval or denial of a PERMIT TO OPERATE will be made after an inspection to verify that the equipment has been constructed in accordance with the approved plans, specifications and conditions of this Authority to Construct, and to determine if the equipment can be operated in compliance with all Rules and Regulations of the San Joaquin Valley Unified Air Pollution Control District. Unless construction has commenced pursuant to Rule 2050, this Authority to Construct shall expire and application shall be cancelled two years from the date of issuance. The applicant is responsible for complying with all laws, ordinances and regulations of all other governmental agencies which may pertain to the above equipment.

Seyed Sadredin, Executive Director / APCO

DRAFT

DAVID WARNER, Director of Permit Services
N-7855-702-0 : Mar 23 2011 1:25PM – ROBERTSD : Joint Inspection NOT Required

8. Total annual VOC emissions from wine fermentation operations shall be determined by the following formula: Total annual VOC emissions = (Total Annual Red Wine Production-gal) x (6.2 lb-VOC/1000 gal) + (Total Annual White Wine Production-gal) x (2.5 lb-VOC/1000 gal). [District Rule 2201]

9. When used for wine storage, this tank shall be equipped with and operated with a pressure-vacuum relief valve, which shall operate within 10% of the maximum allowable working pressure of the tank, operate in accordance with the manufacturer's instructions, and be permanently labeled with the operating pressure settings. [District Rules 2201 and 4694]

10. When used for wine storage, the pressure-vacuum relief valve and storage tank shall remain in a gas-tight condition, except when the operating pressure of the tank exceeds the valve set pressure. A gas-tight condition shall be determined by measuring the gas leak in accordance with the procedures in EPA Method 21. [District Rules 2201 and 4694]

11. The temperature of the wine stored in this tank shall be maintained at or below 75 degrees Fahrenheit. For each batch of wine, the operator shall achieve the storage temperature of 75 degrees Fahrenheit or less within 60 days after completing fermentation, and shall maintain records to show when the required storage temperature of 75 degrees Fahrenheit or less was achieved. [District Rules 2201 and 4694]

12. The average fermentation temperature of each batch of must fermented in this tank shall not exceed 95 oF, calculated as the average of all temperature measurements for the batch taken at least every 12 hours over the course of the fermentation. [District Rule 2201]

13. A Three-Year Compliance Plan that demonstrates compliance with the requirements of Section 5.1 of District Rule 4694 for each year of the applicable compliance period shall be submitted to the District by no later than December 1, 2012, and every three years thereafter on or before December 1. [District Rule 4694]

14. A Three-Year Compliance Plan Verification that demonstrates that the Three-Year Compliance Plan elements are in effect shall be submitted to the District by no later than July 1, 2013, and every three years thereafter on or before July 1. [District Rule 4694]

15. An Annual Compliance Plan Demonstration that shows compliance with the applicable requirements of this rule shall be submitted to the District by no later than February 1, 2012, and every year thereafter on or before February 1. [District Rule 4694]

16. Operators using CER to mitigate fermentation emissions shall perform all monitoring and recordkeeping, as established in their approved Three-Year Compliance Plan, and shall maintain all records necessary to demonstrate compliance. [District Rule 4694]

17. Operators using District Obtained Emission Reductions (DOER) shall submit payment of DOER and administrative fees to the District no later than March 1, of the first year in the applicable compliance period. [District Rule 4694]

18. For each batch of must fermented in this tank, the operator shall record the fermentation completion date, the total gallons of must fermented, the average fermentation temperature and the uncontrolled fermentation emissions and fermentation emission reductions (calculated per the emission factors given in District Rule 4694). The information shall be recorded by the tank Permit to Operate number and by wine type, stated as either red wine or white wine. [District Rules 2201 and 4694]

19. When used for wine storage, daily throughput records, including records of filling and emptying operations, the dates of such operations, a unique identifier for each batch, the volume percent ethanol in the batch, and the volume of wine transferred, shall be maintained. [District Rules 2201 and 4694]

20. When used for wine storage, the operator shall record, on a weekly basis, the total gallons of wine contained in the tank and the maximum temperature of the stored wine. [District Rule 4694]

21. Records of total annual fermentation and total annual storage emissions, including calculation methods and parameters used, shall be maintained. [District Rule 1070 and 2201]

22. Separate annual records of total red wine and total white wine produced by fermentation at this facility, based on values reported to the Alcohol and Tobacco Tax and Trade Bureau (TTB), U.S. Department of the Treasury, shall be maintained. [District Rule 1070 and 2201]

DRAFT

CONDITIONS CONTINUE ON NEXT PAGE

23. All records shall be retained on-site for a period of at least five years and made available for District inspection upon request. [District Rules 2201 and 4694]

DRAFT

San Joaquin Valley
Air Pollution Control District

AUTHORITY TO CONSTRUCT

DRAFT

PERMIT NO: N-7855-703-0 **ISSUANCE DATE:** DRAFT

LEGAL OWNER OR OPERATOR: SUTTER HOME WINERY
MAILING ADDRESS: P O BOX 248
ST HELENA, CA 94574-0248

LOCATION: 18667 N JACOB BRACK RD
LODI, CA 95242

EQUIPMENT DESCRIPTION:
202,638 GALLON WHITE WINE FERMENTATION TANK AND WINE STORAGE TANK (TANK 1202) WITH PRESSURE/VACUUM VALVE AND INSULATION

CONDITIONS

1. {98} No air contaminant shall be released into the atmosphere which causes a public nuisance. [District Rule 4102]
2. The VOC emissions rate for fermentation operations in this tank shall not exceed 1.62 lb/day per 1000 gallons of tank capacity. [District Rule 2201]
3. The ethanol content of wine stored in this tank shall not exceed 23.9 percent by volume. [District Rule 2201]
4. When this tank is used for wine storage, the daily tank throughput, in gallons, shall not exceed five times the maximum nominal tank capacity stated on the equipment description. [District Rule 2201]
5. Total combined annual VOC emissions from all wine fermentation and wine storage operations at this facility shall not exceed 292,950 lb. [District Rule 2201]
6. Combined annual VOC emissions from all wine storage operations shall be determined as the sum of the emissions for each individual wine movement based on the volume transferred in each wine movement and the batch-specific wine storage emission factor calculated using the equation(s) specified within this permit. [District Rule 2201]
7. The annual VOC wine storage emission factor (EF) for each wine transfer shall be selected from the following emission factors based on the ethanol content of the wine transferred: For wine with ethanol content less than 14 volume percent: EF = 0.198 lb-VOC/1000 gallons; For wine with ethanol content between 14 and 21 volume percent, EF = 0.314 lb-VOC/1000 gallons; For wine with ethanol content greater than 21 volume percent, EF = 0.363 lb-VOC/1000 gallon. [District Rule 2201]

CONDITIONS CONTINUE ON NEXT PAGE

YOU MUST NOTIFY THE DISTRICT COMPLIANCE DIVISION AT (209) 557-6400 WHEN CONSTRUCTION IS COMPLETED AND PRIOR TO OPERATING THE EQUIPMENT OR MODIFICATIONS AUTHORIZED BY THIS AUTHORITY TO CONSTRUCT. This is NOT a PERMIT TO OPERATE. Approval or denial of a PERMIT TO OPERATE will be made after an inspection to verify that the equipment has been constructed in accordance with the approved plans, specifications and conditions of this Authority to Construct, and to determine if the equipment can be operated in compliance with all Rules and Regulations of the San Joaquin Valley Unified Air Pollution Control District. Unless construction has commenced pursuant to Rule 2050, this Authority to Construct shall expire and application shall be cancelled two years from the date of issuance. The applicant is responsible for complying with all laws, ordinances and regulations of all other governmental agencies which may pertain to the above equipment.

Seyed Sadredin, Executive Director / APCO

DRAFT

DAVID WARNER, Director of Permit Services
N-7855-703-0: Mar 23 2011 1:25PM -- ROBERTSD : Joint Inspection NOT Required

8. Total annual VOC emissions from wine fermentation operations shall be determined by the following formula: Total annual VOC emissions = (Total Annual Red Wine Production-gal) x (6.2 lb-VOC/1000 gal) + (Total Annual White Wine Production-gal) x (2.5 lb-VOC/1000 gal). [District Rule 2201]
9. When used for wine storage, this tank shall be equipped with and operated with a pressure-vacuum relief valve, which shall operate within 10% of the maximum allowable working pressure of the tank, operate in accordance with the manufacturer's instructions, and be permanently labeled with the operating pressure settings. [District Rules 2201 and 4694]
10. When used for wine storage, the pressure-vacuum relief valve and storage tank shall remain in a gas-tight condition, except when the operating pressure of the tank exceeds the valve set pressure. A gas-tight condition shall be determined by measuring the gas leak in accordance with the procedures in EPA Method 21. [District Rules 2201 and 4694]
11. The temperature of the wine stored in this tank shall be maintained at or below 75 degrees Fahrenheit. For each batch of wine, the operator shall achieve the storage temperature of 75 degrees Fahrenheit or less within 60 days after completing fermentation, and shall maintain records to show when the required storage temperature of 75 degrees Fahrenheit or less was achieved. [District Rules 2201 and 4694]
12. The average fermentation temperature of each batch of must fermented in this tank shall not exceed 95 oF, calculated as the average of all temperature measurements for the batch taken at least every 12 hours over the course of the fermentation. [District Rule 2201]
13. A Three-Year Compliance Plan that demonstrates compliance with the requirements of Section 5.1 of District Rule 4694 for each year of the applicable compliance period shall be submitted to the District by no later than December 1, 2012, and every three years thereafter on or before December 1. [District Rule 4694]
14. A Three-Year Compliance Plan Verification that demonstrates that the Three-Year Compliance Plan elements are in effect shall be submitted to the District by no later than July 1, 2013, and every three years thereafter on or before July 1. [District Rule 4694]
15. An Annual Compliance Plan Demonstration that shows compliance with the applicable requirements of this rule shall be submitted to the District by no later than February 1, 2012, and every year thereafter on or before February 1. [District Rule 4694]
16. Operators using CER to mitigate fermentation emissions shall perform all monitoring and recordkeeping, as established in their approved Three-Year Compliance Plan, and shall maintain all records necessary to demonstrate compliance. [District Rule 4694]
17. Operators using District Obtained Emission Reductions (DOER) shall submit payment of DOER and administrative fees to the District no later than March 1, of the first year in the applicable compliance period. [District Rule 4694]
18. For each batch of must fermented in this tank, the operator shall record the fermentation completion date, the total gallons of must fermented, the average fermentation temperature and the uncontrolled fermentation emissions and fermentation emission reductions (calculated per the emission factors given in District Rule 4694). The information shall be recorded by the tank Permit to Operate number and by wine type, stated as either red wine or white wine. [District Rules 2201 and 4694]
19. When used for wine storage, daily throughput records, including records of filling and emptying operations, the dates of such operations, a unique identifier for each batch, the volume percent ethanol in the batch, and the volume of wine transferred, shall be maintained. [District Rules 2201 and 4694]
20. When used for wine storage, the operator shall record, on a weekly basis, the total gallons of wine contained in the tank and the maximum temperature of the stored wine. [District Rule 4694]
21. Records of total annual fermentation and total annual storage emissions, including calculation methods and parameters used, shall be maintained. [District Rule 1070 and 2201]
22. Separate annual records of total red wine and total white wine produced by fermentation at this facility, based on values reported to the Alcohol and Tobacco Tax and Trade Bureau (TTB), U.S. Department of the Treasury, shall be maintained. [District Rule 1070 and 2201]

DRAFT

CONDITIONS CONTINUE ON NEXT PAGE

23. All records shall be retained on-site for a period of at least five years and made available for District inspection upon request. [District Rules 2201 and 4694]

DRAFT

San Joaquin Valley
Air Pollution Control District

AUTHORITY TO CONSTRUCT

DRAFT

PERMIT NO: N-7855-704-0 **ISSUANCE DATE:** DRAFT

LEGAL OWNER OR OPERATOR: SUTTER HOME WINERY
MAILING ADDRESS: P O BOX 248
ST HELENA, CA 94574-0248

LOCATION: 18667 N JACOB BRACK RD
LODI, CA 95242

EQUIPMENT DESCRIPTION:
202,638 GALLON WHITE WINE FERMENTATION TANK AND WINE STORAGE TANK (TANK 1203) WITH PRESSURE/VACUUM VALVE AND INSULATION

CONDITIONS

1. {98} No air contaminant shall be released into the atmosphere which causes a public nuisance. [District Rule 4102]
2. The VOC emissions rate for fermentation operations in this tank shall not exceed 1.62 lb/day per 1000 gallons of tank capacity. [District Rule 2201]
3. The ethanol content of wine stored in this tank shall not exceed 23.9 percent by volume. [District Rule 2201]
4. When this tank is used for wine storage, the daily tank throughput, in gallons, shall not exceed five times the maximum nominal tank capacity stated on the equipment description. [District Rule 2201]
5. Total combined annual VOC emissions from all wine fermentation and wine storage operations at this facility shall not exceed 292,950 lb. [District Rule 2201]
6. Combined annual VOC emissions from all wine storage operations shall be determined as the sum of the emissions for each individual wine movement based on the volume transferred in each wine movement and the batch-specific wine storage emission factor calculated using the equation(s) specified within this permit. [District Rule 2201]
7. The annual VOC wine storage emission factor (EF) for each wine transfer shall be selected from the following emission factors based on the ethanol content of the wine transferred: For wine with ethanol content less than 14 volume percent: EF = 0.198 lb-VOC/1000 gallons; For wine with ethanol content between 14 and 21 volume percent, EF = 0.314 lb-VOC/1000 gallons; For wine with ethanol content greater than 21 volume percent, EF = 0.363 lb-VOC/1000 gallon. [District Rule 2201]

CONDITIONS CONTINUE ON NEXT PAGE

YOU MUST NOTIFY THE DISTRICT COMPLIANCE DIVISION AT (209) 557-6400 WHEN CONSTRUCTION IS COMPLETED AND PRIOR TO OPERATING THE EQUIPMENT OR MODIFICATIONS AUTHORIZED BY THIS AUTHORITY TO CONSTRUCT. This is NOT a PERMIT TO OPERATE. Approval or denial of a PERMIT TO OPERATE will be made after an inspection to verify that the equipment has been constructed in accordance with the approved plans, specifications and conditions of this Authority to Construct, and to determine if the equipment can be operated in compliance with all Rules and Regulations of the San Joaquin Valley Unified Air Pollution Control District. Unless construction has commenced pursuant to Rule 2050, this Authority to Construct shall expire and application shall be cancelled two years from the date of issuance. The applicant is responsible for complying with all laws, ordinances and regulations of all other governmental agencies which may pertain to the above equipment.

Seyed Sadredin, Executive Director / APCO

DRAFT

DAVID WARNER, Director of Permit Services
N-7855-704-0 : Mar 23 2011 1:25PM -- ROBERTSD : Joint Inspection NOT Required

8. Total annual VOC emissions from wine fermentation operations shall be determined by the following formula: Total annual VOC emissions = (Total Annual Red Wine Production-gal) x (6.2 lb-VOC/1000 gal) + (Total Annual White Wine Production-gal) x (2.5 lb-VOC/1000 gal). [District Rule 2201]

9. When used for wine storage, this tank shall be equipped with and operated with a pressure-vacuum relief valve, which shall operate within 10% of the maximum allowable working pressure of the tank, operate in accordance with the manufacturer's instructions, and be permanently labeled with the operating pressure settings. [District Rules 2201 and 4694]

10. When used for wine storage, the pressure-vacuum relief valve and storage tank shall remain in a gas-tight condition, except when the operating pressure of the tank exceeds the valve set pressure. A gas-tight condition shall be determined by measuring the gas leak in accordance with the procedures in EPA Method 21. [District Rules 2201 and 4694]

11. The temperature of the wine stored in this tank shall be maintained at or below 75 degrees Fahrenheit. For each batch of wine, the operator shall achieve the storage temperature of 75 degrees Fahrenheit or less within 60 days after completing fermentation, and shall maintain records to show when the required storage temperature of 75 degrees Fahrenheit or less was achieved. [District Rules 2201 and 4694]

12. The average fermentation temperature of each batch of must fermented in this tank shall not exceed 95 oF, calculated as the average of all temperature measurements for the batch taken at least every 12 hours over the course of the fermentation. [District Rule 2201]

13. A Three-Year Compliance Plan that demonstrates compliance with the requirements of Section 5.1 of District Rule 4694 for each year of the applicable compliance period shall be submitted to the District by no later than December 1, 2012, and every three years thereafter on or before December 1. [District Rule 4694]

14. A Three-Year Compliance Plan Verification that demonstrates that the Three-Year Compliance Plan elements are in effect shall be submitted to the District by no later than July 1, 2013, and every three years thereafter on or before July 1. [District Rule 4694]

15. An Annual Compliance Plan Demonstration that shows compliance with the applicable requirements of this rule shall be submitted to the District by no later than February 1, 2012, and every year thereafter on or before February 1. [District Rule 4694]

16. Operators using CER to mitigate fermentation emissions shall perform all monitoring and recordkeeping, as established in their approved Three-Year Compliance Plan, and shall maintain all records necessary to demonstrate compliance. [District Rule 4694]

17. Operators using District Obtained Emission Reductions (DOER) shall submit payment of DOER and administrative fees to the District no later than March 1, of the first year in the applicable compliance period. [District Rule 4694]

18. For each batch of must fermented in this tank, the operator shall record the fermentation completion date, the total gallons of must fermented, the average fermentation temperature and the uncontrolled fermentation emissions and fermentation emission reductions (calculated per the emission factors given in District Rule 4694). The information shall be recorded by the tank Permit to Operate number and by wine type, stated as either red wine or white wine. [District Rules 2201 and 4694]

19. When used for wine storage, daily throughput records, including records of filling and emptying operations, the dates of such operations, a unique identifier for each batch, the volume percent ethanol in the batch, and the volume of wine transferred, shall be maintained. [District Rules 2201 and 4694]

20. When used for wine storage, the operator shall record, on a weekly basis, the total gallons of wine contained in the tank and the maximum temperature of the stored wine. [District Rule 4694]

21. Records of total annual fermentation and total annual storage emissions, including calculation methods and parameters used, shall be maintained. [District Rule 1070 and 2201]

22. Separate annual records of total red wine and total white wine produced by fermentation at this facility, based on values reported to the Alcohol and Tobacco Tax and Trade Bureau (TTB), U.S. Department of the Treasury, shall be maintained. [District Rule 1070 and 2201]

DRAFT

CONDITIONS CONTINUE ON NEXT PAGE

23. All records shall be retained on-site for a period of at least five years and made available for District inspection upon request. [District Rules 2201 and 4694]

DRAFT

San Joaquin Valley
Air Pollution Control District

AUTHORITY TO CONSTRUCT

DRAFT

PERMIT NO: N-7855-705-0 **ISSUANCE DATE:** DRAFT

LEGAL OWNER OR OPERATOR: SUTTER HOME WINERY
MAILING ADDRESS: P O BOX 248
ST HELENA, CA 94574-0248

LOCATION: 18667 N JACOB BRACK RD
LODI, CA 95242

EQUIPMENT DESCRIPTION:
202,638 GALLON WHITE WINE FERMENTATION TANK AND WINE STORAGE TANK (TANK 1204) WITH PRESSURE/VACUUM VALVE AND INSULATION

CONDITIONS

1. {98} No air contaminant shall be released into the atmosphere which causes a public nuisance. [District Rule 4102]
2. The VOC emissions rate for fermentation operations in this tank shall not exceed 1.62 lb/day per 1000 gallons of tank capacity. [District Rule 2201]
3. The ethanol content of wine stored in this tank shall not exceed 23.9 percent by volume. [District Rule 2201]
4. When this tank is used for wine storage, the daily tank throughput, in gallons, shall not exceed five times the maximum nominal tank capacity stated on the equipment description. [District Rule 2201]
5. Total combined annual VOC emissions from all wine fermentation and wine storage operations at this facility shall not exceed 292,950 lb. [District Rule 2201]
6. Combined annual VOC emissions from all wine storage operations shall be determined as the sum of the emissions for each individual wine movement based on the volume transferred in each wine movement and the batch-specific wine storage emission factor calculated using the equation(s) specified within this permit. [District Rule 2201]
7. The annual VOC wine storage emission factor (EF) for each wine transfer shall be selected from the following emission factors based on the ethanol content of the wine transferred: For wine with ethanol content less than 14 volume percent: EF = 0.198 lb-VOC/1000 gallons; For wine with ethanol content between 14 and 21 volume percent, EF = 0.314 lb-VOC/1000 gallons; For wine with ethanol content greater than 21 volume percent, EF = 0.363 lb-VOC/1000 gallon. [District Rule 2201]

CONDITIONS CONTINUE ON NEXT PAGE

YOU MUST NOTIFY THE DISTRICT COMPLIANCE DIVISION AT (209) 557-6400 WHEN CONSTRUCTION IS COMPLETED AND PRIOR TO OPERATING THE EQUIPMENT OR MODIFICATIONS AUTHORIZED BY THIS AUTHORITY TO CONSTRUCT. This is NOT a PERMIT TO OPERATE. Approval or denial of a PERMIT TO OPERATE will be made after an inspection to verify that the equipment has been constructed in accordance with the approved plans, specifications and conditions of this Authority to Construct, and to determine if the equipment can be operated in compliance with all Rules and Regulations of the San Joaquin Valley Unified Air Pollution Control District. Unless construction has commenced pursuant to Rule 2050, this Authority to Construct shall expire and application shall be cancelled two years from the date of issuance. The applicant is responsible for complying with all laws, ordinances and regulations of all other governmental agencies which may pertain to the above equipment.

Seyed Sadredin, Executive Director / APCO

DRAFT

DAVID WARNER, Director of Permit Services
N-7855-705-0 : Mar 23 2011 1:25PM -- ROBERTSD : Joint Inspection NOT Required

8. Total annual VOC emissions from wine fermentation operations shall be determined by the following formula: Total annual VOC emissions = (Total Annual Red Wine Production-gal) x (6.2 lb-VOC/1000 gal) + (Total Annual White Wine Production-gal) x (2.5 lb-VOC/1000 gal). [District Rule 2201]

9. When used for wine storage, this tank shall be equipped with and operated with a pressure-vacuum relief valve, which shall operate within 10% of the maximum allowable working pressure of the tank, operate in accordance with the manufacturer's instructions, and be permanently labeled with the operating pressure settings. [District Rules 2201 and 4694]

10. When used for wine storage, the pressure-vacuum relief valve and storage tank shall remain in a gas-tight condition, except when the operating pressure of the tank exceeds the valve set pressure. A gas-tight condition shall be determined by measuring the gas leak in accordance with the procedures in EPA Method 21. [District Rules 2201 and 4694]

11. The temperature of the wine stored in this tank shall be maintained at or below 75 degrees Fahrenheit. For each batch of wine, the operator shall achieve the storage temperature of 75 degrees Fahrenheit or less within 60 days after completing fermentation, and shall maintain records to show when the required storage temperature of 75 degrees Fahrenheit or less was achieved. [District Rules 2201 and 4694]

12. The average fermentation temperature of each batch of must fermented in this tank shall not exceed 95 oF, calculated as the average of all temperature measurements for the batch taken at least every 12 hours over the course of the fermentation. [District Rule 2201]

13. A Three-Year Compliance Plan that demonstrates compliance with the requirements of Section 5.1 of District Rule 4694 for each year of the applicable compliance period shall be submitted to the District by no later than December 1, 2012, and every three years thereafter on or before December 1. [District Rule 4694]

14. A Three-Year Compliance Plan Verification that demonstrates that the Three-Year Compliance Plan elements are in effect shall be submitted to the District by no later than July 1, 2013, and every three years thereafter on or before July 1. [District Rule 4694]

15. An Annual Compliance Plan Demonstration that shows compliance with the applicable requirements of this rule shall be submitted to the District by no later than February 1, 2012, and every year thereafter on or before February 1. [District Rule 4694]

16. Operators using CER to mitigate fermentation emissions shall perform all monitoring and recordkeeping, as established in their approved Three-Year Compliance Plan, and shall maintain all records necessary to demonstrate compliance. [District Rule 4694]

17. Operators using District Obtained Emission Reductions (DOER) shall submit payment of DOER and administrative fees to the District no later than March 1, of the first year in the applicable compliance period. [District Rule 4694]

18. For each batch of must fermented in this tank, the operator shall record the fermentation completion date, the total gallons of must fermented, the average fermentation temperature and the uncontrolled fermentation emissions and fermentation emission reductions (calculated per the emission factors given in District Rule 4694). The information shall be recorded by the tank Permit to Operate number and by wine type, stated as either red wine or white wine. [District Rules 2201 and 4694]

19. When used for wine storage, daily throughput records, including records of filling and emptying operations, the dates of such operations, a unique identifier for each batch, the volume percent ethanol in the batch, and the volume of wine transferred, shall be maintained. [District Rules 2201 and 4694]

20. When used for wine storage, the operator shall record, on a weekly basis, the total gallons of wine contained in the tank and the maximum temperature of the stored wine. [District Rule 4694]

21. Records of total annual fermentation and total annual storage emissions, including calculation methods and parameters used, shall be maintained. [District Rule 1070 and 2201]

22. Separate annual records of total red wine and total white wine produced by fermentation at this facility, based on values reported to the Alcohol and Tobacco Tax and Trade Bureau (TTB), U.S. Department of the Treasury, shall be maintained. [District Rule 1070 and 2201]

DRAFT

CONDITIONS CONTINUE ON NEXT PAGE

23. All records shall be retained on-site for a period of at least five years and made available for District inspection upon request. [District Rules 2201 and 4694]

DRAFT

San Joaquin Valley
Air Pollution Control District

AUTHORITY TO CONSTRUCT

DRAFT

PERMIT NO: N-7855-706-0 **ISSUANCE DATE:** DRAFT

LEGAL OWNER OR OPERATOR: SUTTER HOME WINERY
MAILING ADDRESS: P O BOX 248
ST HELENA, CA 94574-0248

LOCATION: 18667 N JACOB BRACK RD
LODI, CA 95242

EQUIPMENT DESCRIPTION:
202,638 GALLON WHITE WINE FERMENTATION TANK AND WINE STORAGE TANK (TANK 1205) WITH PRESSURE/VACUUM VALVE AND INSULATION

CONDITIONS

1. {98} No air contaminant shall be released into the atmosphere which causes a public nuisance. [District Rule 4102]
2. The VOC emissions rate for fermentation operations in this tank shall not exceed 1.62 lb/day per 1000 gallons of tank capacity. [District Rule 2201]
3. The ethanol content of wine stored in this tank shall not exceed 23.9 percent by volume. [District Rule 2201]
4. When this tank is used for wine storage, the daily tank throughput, in gallons, shall not exceed five times the maximum nominal tank capacity stated on the equipment description. [District Rule 2201]
5. Total combined annual VOC emissions from all wine fermentation and wine storage operations at this facility shall not exceed 292,950 lb. [District Rule 2201]
6. Combined annual VOC emissions from all wine storage operations shall be determined as the sum of the emissions for each individual wine movement based on the volume transferred in each wine movement and the batch-specific wine storage emission factor calculated using the equation(s) specified within this permit. [District Rule 2201]
7. The annual VOC wine storage emission factor (EF) for each wine transfer shall be selected from the following emission factors based on the ethanol content of the wine transferred: For wine with ethanol content less than 14 volume percent: EF = 0.198 lb-VOC/1000 gallons; For wine with ethanol content between 14 and 21 volume percent, EF = 0.314 lb-VOC/1000 gallons; For wine with ethanol content greater than 21 volume percent, EF = 0.363 lb-VOC/1000 gallon. [District Rule 2201]

CONDITIONS CONTINUE ON NEXT PAGE

YOU MUST NOTIFY THE DISTRICT COMPLIANCE DIVISION AT (209) 557-6400 WHEN CONSTRUCTION IS COMPLETED AND PRIOR TO OPERATING THE EQUIPMENT OR MODIFICATIONS AUTHORIZED BY THIS AUTHORITY TO CONSTRUCT. This is NOT a PERMIT TO OPERATE. Approval or denial of a PERMIT TO OPERATE will be made after an inspection to verify that the equipment has been constructed in accordance with the approved plans, specifications and conditions of this Authority to Construct, and to determine if the equipment can be operated in compliance with all Rules and Regulations of the San Joaquin Valley Unified Air Pollution Control District. Unless construction has commenced pursuant to Rule 2050, this Authority to Construct shall expire and application shall be cancelled two years from the date of issuance. The applicant is responsible for complying with all laws, ordinances and regulations of all other governmental agencies which may pertain to the above equipment.

Seyed Sadredin, Executive Director / APCO

DRAFT

DAVID WARNER, Director of Permit Services
N-7855-706-0 : Mar 23 2011 1:25PM – ROBERTSD : Joint Inspection NOT Required

8. Total annual VOC emissions from wine fermentation operations shall be determined by the following formula: Total annual VOC emissions = (Total Annual Red Wine Production-gal) x (6.2 lb-VOC/1000 gal) + (Total Annual White Wine Production-gal) x (2.5 lb-VOC/1000 gal). [District Rule 2201]

9. When used for wine storage, this tank shall be equipped with and operated with a pressure-vacuum relief valve, which shall operate within 10% of the maximum allowable working pressure of the tank, operate in accordance with the manufacturer's instructions, and be permanently labeled with the operating pressure settings. [District Rules 2201 and 4694]

10. When used for wine storage, the pressure-vacuum relief valve and storage tank shall remain in a gas-tight condition, except when the operating pressure of the tank exceeds the valve set pressure. A gas-tight condition shall be determined by measuring the gas leak in accordance with the procedures in EPA Method 21. [District Rules 2201 and 4694]

11. The temperature of the wine stored in this tank shall be maintained at or below 75 degrees Fahrenheit. For each batch of wine, the operator shall achieve the storage temperature of 75 degrees Fahrenheit or less within 60 days after completing fermentation, and shall maintain records to show when the required storage temperature of 75 degrees Fahrenheit or less was achieved. [District Rules 2201 and 4694]

12. The average fermentation temperature of each batch of must fermented in this tank shall not exceed 95 oF, calculated as the average of all temperature measurements for the batch taken at least every 12 hours over the course of the fermentation. [District Rule 2201]

13. A Three-Year Compliance Plan that demonstrates compliance with the requirements of Section 5.1 of District Rule 4694 for each year of the applicable compliance period shall be submitted to the District by no later than December 1, 2012, and every three years thereafter on or before December 1. [District Rule 4694]

14. A Three-Year Compliance Plan Verification that demonstrates that the Three-Year Compliance Plan elements are in effect shall be submitted to the District by no later than July 1, 2013, and every three years thereafter on or before July 1. [District Rule 4694]

15. An Annual Compliance Plan Demonstration that shows compliance with the applicable requirements of this rule shall be submitted to the District by no later than February 1, 2012, and every year thereafter on or before February 1. [District Rule 4694]

16. Operators using CER to mitigate fermentation emissions shall perform all monitoring and recordkeeping, as established in their approved Three-Year Compliance Plan, and shall maintain all records necessary to demonstrate compliance. [District Rule 4694]

17. Operators using District Obtained Emission Reductions (DOER) shall submit payment of DOER and administrative fees to the District no later than March 1, of the first year in the applicable compliance period. [District Rule 4694]

18. For each batch of must fermented in this tank, the operator shall record the fermentation completion date, the total gallons of must fermented, the average fermentation temperature and the uncontrolled fermentation emissions and fermentation emission reductions (calculated per the emission factors given in District Rule 4694). The information shall be recorded by the tank Permit to Operate number and by wine type, stated as either red wine or white wine. [District Rules 2201 and 4694]

19. When used for wine storage, daily throughput records, including records of filling and emptying operations, the dates of such operations, a unique identifier for each batch, the volume percent ethanol in the batch, and the volume of wine transferred, shall be maintained. [District Rules 2201 and 4694]

20. When used for wine storage, the operator shall record, on a weekly basis, the total gallons of wine contained in the tank and the maximum temperature of the stored wine. [District Rule 4694]

21. Records of total annual fermentation and total annual storage emissions, including calculation methods and parameters used, shall be maintained. [District Rule 1070 and 2201]

22. Separate annual records of total red wine and total white wine produced by fermentation at this facility, based on values reported to the Alcohol and Tobacco Tax and Trade Bureau (TTB), U.S. Department of the Treasury, shall be maintained. [District Rule 1070 and 2201]

DRAFT

CONDITIONS CONTINUE ON NEXT PAGE

23. All records shall be retained on-site for a period of at least five years and made available for District inspection upon request. [District Rules 2201 and 4694]

DRAFT

San Joaquin Valley
Air Pollution Control District

AUTHORITY TO CONSTRUCT

DRAFT

PERMIT NO: N-7855-707-0 **ISSUANCE DATE:** DRAFT

LEGAL OWNER OR OPERATOR: SUTTER HOME WINERY
MAILING ADDRESS: P O BOX 248
ST HELENA, CA 94574-0248

LOCATION: 18667 N JACOB BRACK RD
LODI, CA 95242

EQUIPMENT DESCRIPTION:
202,638 GALLON WHITE WINE FERMENTATION TANK AND WINE STORAGE TANK (TANK 1206) WITH PRESSURE/VACUUM VALVE AND INSULATION

CONDITIONS

1. {98} No air contaminant shall be released into the atmosphere which causes a public nuisance. [District Rule 4102]
2. The VOC emissions rate for fermentation operations in this tank shall not exceed 1.62 lb/day per 1000 gallons of tank capacity. [District Rule 2201]
3. The ethanol content of wine stored in this tank shall not exceed 23.9 percent by volume. [District Rule 2201]
4. When this tank is used for wine storage, the daily tank throughput, in gallons, shall not exceed five times the maximum nominal tank capacity stated on the equipment description. [District Rule 2201]
5. Total combined annual VOC emissions from all wine fermentation and wine storage operations at this facility shall not exceed 292,950 lb. [District Rule 2201]
6. Combined annual VOC emissions from all wine storage operations shall be determined as the sum of the emissions for each individual wine movement based on the volume transferred in each wine movement and the batch-specific wine storage emission factor calculated using the equation(s) specified within this permit. [District Rule 2201]
7. The annual VOC wine storage emission factor (EF) for each wine transfer shall be selected from the following emission factors based on the ethanol content of the wine transferred: For wine with ethanol content less than 14 volume percent: EF = 0.198 lb-VOC/1000 gallons; For wine with ethanol content between 14 and 21 volume percent, EF = 0.314 lb-VOC/1000 gallons; For wine with ethanol content greater than 21 volume percent, EF = 0.363 lb-VOC/1000 gallon. [District Rule 2201]

CONDITIONS CONTINUE ON NEXT PAGE

YOU MUST NOTIFY THE DISTRICT COMPLIANCE DIVISION AT (209) 557-6400 WHEN CONSTRUCTION IS COMPLETED AND PRIOR TO OPERATING THE EQUIPMENT OR MODIFICATIONS AUTHORIZED BY THIS AUTHORITY TO CONSTRUCT. This is NOT a PERMIT TO OPERATE. Approval or denial of a PERMIT TO OPERATE will be made after an inspection to verify that the equipment has been constructed in accordance with the approved plans, specifications and conditions of this Authority to Construct, and to determine if the equipment can be operated in compliance with all Rules and Regulations of the San Joaquin Valley Unified Air Pollution Control District. Unless construction has commenced pursuant to Rule 2050, this Authority to Construct shall expire and application shall be cancelled two years from the date of issuance. The applicant is responsible for complying with all laws, ordinances and regulations of all other governmental agencies which may pertain to the above equipment.

Seyed Sadredin, Executive Director / APCO

DRAFT

DAVID WARNER, Director of Permit Services
N-7855-707-0 : Mar 23 2011 1:25PM -- ROBERTSD : Joint Inspection NOT Required

8. Total annual VOC emissions from wine fermentation operations shall be determined by the following formula: Total annual VOC emissions = (Total Annual Red Wine Production-gal) x (6.2 lb-VOC/1000 gal) + (Total Annual White Wine Production-gal) x (2.5 lb-VOC/1000 gal). [District Rule 2201]

9. When used for wine storage, this tank shall be equipped with and operated with a pressure-vacuum relief valve, which shall operate within 10% of the maximum allowable working pressure of the tank, operate in accordance with the manufacturer's instructions, and be permanently labeled with the operating pressure settings. [District Rules 2201 and 4694]

10. When used for wine storage, the pressure-vacuum relief valve and storage tank shall remain in a gas-tight condition, except when the operating pressure of the tank exceeds the valve set pressure. A gas-tight condition shall be determined by measuring the gas leak in accordance with the procedures in EPA Method 21. [District Rules 2201 and 4694]

11. The temperature of the wine stored in this tank shall be maintained at or below 75 degrees Fahrenheit. For each batch of wine, the operator shall achieve the storage temperature of 75 degrees Fahrenheit or less within 60 days after completing fermentation, and shall maintain records to show when the required storage temperature of 75 degrees Fahrenheit or less was achieved. [District Rules 2201 and 4694]

12. The average fermentation temperature of each batch of must fermented in this tank shall not exceed 95 oF, calculated as the average of all temperature measurements for the batch taken at least every 12 hours over the course of the fermentation. [District Rule 2201]

13. A Three-Year Compliance Plan that demonstrates compliance with the requirements of Section 5.1 of District Rule 4694 for each year of the applicable compliance period shall be submitted to the District by no later than December 1, 2012, and every three years thereafter on or before December 1. [District Rule 4694]

14. A Three-Year Compliance Plan Verification that demonstrates that the Three-Year Compliance Plan elements are in effect shall be submitted to the District by no later than July 1, 2013, and every three years thereafter on or before July 1. [District Rule 4694]

15. An Annual Compliance Plan Demonstration that shows compliance with the applicable requirements of this rule shall be submitted to the District by no later than February 1, 2012, and every year thereafter on or before February 1. [District Rule 4694]

16. Operators using CER to mitigate fermentation emissions shall perform all monitoring and recordkeeping, as established in their approved Three-Year Compliance Plan, and shall maintain all records necessary to demonstrate compliance. [District Rule 4694]

17. Operators using District Obtained Emission Reductions (DOER) shall submit payment of DOER and administrative fees to the District no later than March 1, of the first year in the applicable compliance period. [District Rule 4694]

18. For each batch of must fermented in this tank, the operator shall record the fermentation completion date, the total gallons of must fermented, the average fermentation temperature and the uncontrolled fermentation emissions and fermentation emission reductions (calculated per the emission factors given in District Rule 4694). The information shall be recorded by the tank Permit to Operate number and by wine type, stated as either red wine or white wine. [District Rules 2201 and 4694]

19. When used for wine storage, daily throughput records, including records of filling and emptying operations, the dates of such operations, a unique identifier for each batch, the volume percent ethanol in the batch, and the volume of wine transferred, shall be maintained. [District Rules 2201 and 4694]

20. When used for wine storage, the operator shall record, on a weekly basis, the total gallons of wine contained in the tank and the maximum temperature of the stored wine. [District Rule 4694]

21. Records of total annual fermentation and total annual storage emissions, including calculation methods and parameters used, shall be maintained. [District Rule 1070 and 2201]

22. Separate annual records of total red wine and total white wine produced by fermentation at this facility, based on values reported to the Alcohol and Tobacco Tax and Trade Bureau (TTB), U.S. Department of the Treasury, shall be maintained. [District Rule 1070 and 2201]

DRAFT

CONDITIONS CONTINUE ON NEXT PAGE

23. All records shall be retained on-site for a period of at least five years and made available for District inspection upon request. [District Rules 2201 and 4694]

DRAFT

San Joaquin Valley
Air Pollution Control District

AUTHORITY TO CONSTRUCT

DRAFT

PERMIT NO: N-7855-708-0 **ISSUANCE DATE:** DRAFT

LEGAL OWNER OR OPERATOR: SUTTER HOME WINERY
MAILING ADDRESS: P O BOX 248
ST HELENA, CA 94574-0248

LOCATION: 18667 N JACOB BRACK RD
LODI, CA 95242

EQUIPMENT DESCRIPTION:
202,638 GALLON WHITE WINE FERMENTATION TANK AND WINE STORAGE TANK (TANK 1207) WITH PRESSURE/VACUUM VALVE AND INSULATION

CONDITIONS

1. {98} No air contaminant shall be released into the atmosphere which causes a public nuisance. [District Rule 4102]
2. The VOC emissions rate for fermentation operations in this tank shall not exceed 1.62 lb/day per 1000 gallons of tank capacity. [District Rule 2201]
3. The ethanol content of wine stored in this tank shall not exceed 23.9 percent by volume. [District Rule 2201]
4. When this tank is used for wine storage, the daily tank throughput, in gallons, shall not exceed five times the maximum nominal tank capacity stated on the equipment description. [District Rule 2201]
5. Total combined annual VOC emissions from all wine fermentation and wine storage operations at this facility shall not exceed 292,950 lb. [District Rule 2201]
6. Combined annual VOC emissions from all wine storage operations shall be determined as the sum of the emissions for each individual wine movement based on the volume transferred in each wine movement and the batch-specific wine storage emission factor calculated using the equation(s) specified within this permit. [District Rule 2201]
7. The annual VOC wine storage emission factor (EF) for each wine transfer shall be selected from the following emission factors based on the ethanol content of the wine transferred: For wine with ethanol content less than 14 volume percent: EF = 0.198 lb-VOC/1000 gallons; For wine with ethanol content between 14 and 21 volume percent, EF = 0.314 lb-VOC/1000 gallons; For wine with ethanol content greater than 21 volume percent, EF = 0.363 lb-VOC/1000 gallon. [District Rule 2201]

CONDITIONS CONTINUE ON NEXT PAGE

YOU MUST NOTIFY THE DISTRICT COMPLIANCE DIVISION AT (209) 557-6400 WHEN CONSTRUCTION IS COMPLETED AND PRIOR TO OPERATING THE EQUIPMENT OR MODIFICATIONS AUTHORIZED BY THIS AUTHORITY TO CONSTRUCT. This is NOT a PERMIT TO OPERATE. Approval or denial of a PERMIT TO OPERATE will be made after an inspection to verify that the equipment has been constructed in accordance with the approved plans, specifications and conditions of this Authority to Construct, and to determine if the equipment can be operated in compliance with all Rules and Regulations of the San Joaquin Valley Unified Air Pollution Control District. Unless construction has commenced pursuant to Rule 2050, this Authority to Construct shall expire and application shall be cancelled two years from the date of issuance. The applicant is responsible for complying with all laws, ordinances and regulations of all other governmental agencies which may pertain to the above equipment.

Seyed Sadredin, Executive Director / APCO

DRAFT

DAVID WARNER, Director of Permit Services
N-7855-708-0 : Mar 23 2011 1:25PM -- ROBERTSD : Joint Inspection NOT Required

8. Total annual VOC emissions from wine fermentation operations shall be determined by the following formula: Total annual VOC emissions = (Total Annual Red Wine Production-gal) x (6.2 lb-VOC/1000 gal) + (Total Annual White Wine Production-gal) x (2.5 lb-VOC/1000 gal). [District Rule 2201]

9. When used for wine storage, this tank shall be equipped with and operated with a pressure-vacuum relief valve, which shall operate within 10% of the maximum allowable working pressure of the tank, operate in accordance with the manufacturer's instructions, and be permanently labeled with the operating pressure settings. [District Rules 2201 and 4694]

10. When used for wine storage, the pressure-vacuum relief valve and storage tank shall remain in a gas-tight condition, except when the operating pressure of the tank exceeds the valve set pressure. A gas-tight condition shall be determined by measuring the gas leak in accordance with the procedures in EPA Method 21. [District Rules 2201 and 4694]

11. The temperature of the wine stored in this tank shall be maintained at or below 75 degrees Fahrenheit. For each batch of wine, the operator shall achieve the storage temperature of 75 degrees Fahrenheit or less within 60 days after completing fermentation, and shall maintain records to show when the required storage temperature of 75 degrees Fahrenheit or less was achieved. [District Rules 2201 and 4694]

12. The average fermentation temperature of each batch of must fermented in this tank shall not exceed 95 oF, calculated as the average of all temperature measurements for the batch taken at least every 12 hours over the course of the fermentation. [District Rule 2201]

13. A Three-Year Compliance Plan that demonstrates compliance with the requirements of Section 5.1 of District Rule 4694 for each year of the applicable compliance period shall be submitted to the District by no later than December 1, 2012, and every three years thereafter on or before December 1. [District Rule 4694]

14. A Three-Year Compliance Plan Verification that demonstrates that the Three-Year Compliance Plan elements are in effect shall be submitted to the District by no later than July 1, 2013, and every three years thereafter on or before July 1. [District Rule 4694]

15. An Annual Compliance Plan Demonstration that shows compliance with the applicable requirements of this rule shall be submitted to the District by no later than February 1, 2012, and every year thereafter on or before February 1. [District Rule 4694]

16. Operators using CER to mitigate fermentation emissions shall perform all monitoring and recordkeeping, as established in their approved Three-Year Compliance Plan, and shall maintain all records necessary to demonstrate compliance. [District Rule 4694]

17. Operators using District Obtained Emission Reductions (DOER) shall submit payment of DOER and administrative fees to the District no later than March 1, of the first year in the applicable compliance period. [District Rule 4694]

18. For each batch of must fermented in this tank, the operator shall record the fermentation completion date, the total gallons of must fermented, the average fermentation temperature and the uncontrolled fermentation emissions and fermentation emission reductions (calculated per the emission factors given in District Rule 4694). The information shall be recorded by the tank Permit to Operate number and by wine type, stated as either red wine or white wine. [District Rules 2201 and 4694]

19. When used for wine storage, daily throughput records, including records of filling and emptying operations, the dates of such operations, a unique identifier for each batch, the volume percent ethanol in the batch, and the volume of wine transferred, shall be maintained. [District Rules 2201 and 4694]

20. When used for wine storage, the operator shall record, on a weekly basis, the total gallons of wine contained in the tank and the maximum temperature of the stored wine. [District Rule 4694]

21. Records of total annual fermentation and total annual storage emissions, including calculation methods and parameters used, shall be maintained. [District Rule 1070 and 2201]

22. Separate annual records of total red wine and total white wine produced by fermentation at this facility, based on values reported to the Alcohol and Tobacco Tax and Trade Bureau (TTB), U.S. Department of the Treasury, shall be maintained. [District Rule 1070 and 2201]

DRAFT

CONDITIONS CONTINUE ON NEXT PAGE

23. All records shall be retained on-site for a period of at least five years and made available for District inspection upon request. [District Rules 2201 and 4694]

DRAFT

San Joaquin Valley
Air Pollution Control District

AUTHORITY TO CONSTRUCT

DRAFT

PERMIT NO: N-7855-709-0 **ISSUANCE DATE:** DRAFT

LEGAL OWNER OR OPERATOR: SUTTER HOME WINERY
MAILING ADDRESS: P O BOX 248
ST HELENA, CA 94574-0248

LOCATION: 18667 N JACOB BRACK RD
LODI, CA 95242

EQUIPMENT DESCRIPTION:
202,638 GALLON WHITE WINE FERMENTATION TANK AND WINE STORAGE TANK (TANK 1208) WITH PRESSURE/VACUUM VALVE AND INSULATION

CONDITIONS

1. {98} No air contaminant shall be released into the atmosphere which causes a public nuisance. [District Rule 4102]
2. The VOC emissions rate for fermentation operations in this tank shall not exceed 1.62 lb/day per 1000 gallons of tank capacity. [District Rule 2201]
3. The ethanol content of wine stored in this tank shall not exceed 23.9 percent by volume. [District Rule 2201]
4. When this tank is used for wine storage, the daily tank throughput, in gallons, shall not exceed five times the maximum nominal tank capacity stated on the equipment description. [District Rule 2201]
5. Total combined annual VOC emissions from all wine fermentation and wine storage operations at this facility shall not exceed 292,950 lb. [District Rule 2201]
6. Combined annual VOC emissions from all wine storage operations shall be determined as the sum of the emissions for each individual wine movement based on the volume transferred in each wine movement and the batch-specific wine storage emission factor calculated using the equation(s) specified within this permit. [District Rule 2201]
7. The annual VOC wine storage emission factor (EF) for each wine transfer shall be selected from the following emission factors based on the ethanol content of the wine transferred: For wine with ethanol content less than 14 volume percent: EF = 0.198 lb-VOC/1000 gallons; For wine with ethanol content between 14 and 21 volume percent, EF = 0.314 lb-VOC/1000 gallons; For wine with ethanol content greater than 21 volume percent, EF = 0.363 lb-VOC/1000 gallon. [District Rule 2201]

CONDITIONS CONTINUE ON NEXT PAGE

YOU MUST NOTIFY THE DISTRICT COMPLIANCE DIVISION AT (209) 557-6400 WHEN CONSTRUCTION IS COMPLETED AND PRIOR TO OPERATING THE EQUIPMENT OR MODIFICATIONS AUTHORIZED BY THIS AUTHORITY TO CONSTRUCT. This is NOT a PERMIT TO OPERATE. Approval or denial of a PERMIT TO OPERATE will be made after an inspection to verify that the equipment has been constructed in accordance with the approved plans, specifications and conditions of this Authority to Construct, and to determine if the equipment can be operated in compliance with all Rules and Regulations of the San Joaquin Valley Unified Air Pollution Control District. Unless construction has commenced pursuant to Rule 2050, this Authority to Construct shall expire and application shall be cancelled two years from the date of issuance. The applicant is responsible for complying with all laws, ordinances and regulations of all other governmental agencies which may pertain to the above equipment.

Seyed Sadredin, Executive Director / APCO

DRAFT

DAVID WARNER, Director of Permit Services
N-7855-709-0 : Mar 23 2011 1:25PM -- ROBERTSD : Joint Inspection NOT Required

8. Total annual VOC emissions from wine fermentation operations shall be determined by the following formula: Total annual VOC emissions = (Total Annual Red Wine Production-gal) x (6.2 lb-VOC/1000 gal) + (Total Annual White Wine Production-gal) x (2.5 lb-VOC/1000 gal). [District Rule 2201]

9. When used for wine storage, this tank shall be equipped with and operated with a pressure-vacuum relief valve, which shall operate within 10% of the maximum allowable working pressure of the tank, operate in accordance with the manufacturer's instructions, and be permanently labeled with the operating pressure settings. [District Rules 2201 and 4694]

10. When used for wine storage, the pressure-vacuum relief valve and storage tank shall remain in a gas-tight condition, except when the operating pressure of the tank exceeds the valve set pressure. A gas-tight condition shall be determined by measuring the gas leak in accordance with the procedures in EPA Method 21. [District Rules 2201 and 4694]

11. The temperature of the wine stored in this tank shall be maintained at or below 75 degrees Fahrenheit. For each batch of wine, the operator shall achieve the storage temperature of 75 degrees Fahrenheit or less within 60 days after completing fermentation, and shall maintain records to show when the required storage temperature of 75 degrees Fahrenheit or less was achieved. [District Rules 2201 and 4694]

12. The average fermentation temperature of each batch of must fermented in this tank shall not exceed 95 oF, calculated as the average of all temperature measurements for the batch taken at least every 12 hours over the course of the fermentation. [District Rule 2201]

13. A Three-Year Compliance Plan that demonstrates compliance with the requirements of Section 5.1 of District Rule 4694 for each year of the applicable compliance period shall be submitted to the District by no later than December 1, 2012, and every three years thereafter on or before December 1. [District Rule 4694]

14. A Three-Year Compliance Plan Verification that demonstrates that the Three-Year Compliance Plan elements are in effect shall be submitted to the District by no later than July 1, 2013, and every three years thereafter on or before July 1. [District Rule 4694]

15. An Annual Compliance Plan Demonstration that shows compliance with the applicable requirements of this rule shall be submitted to the District by no later than February 1, 2012, and every year thereafter on or before February 1. [District Rule 4694]

16. Operators using CER to mitigate fermentation emissions shall perform all monitoring and recordkeeping, as established in their approved Three-Year Compliance Plan, and shall maintain all records necessary to demonstrate compliance. [District Rule 4694]

17. Operators using District Obtained Emission Reductions (DOER) shall submit payment of DOER and administrative fees to the District no later than March 1, of the first year in the applicable compliance period. [District Rule 4694]

18. For each batch of must fermented in this tank, the operator shall record the fermentation completion date, the total gallons of must fermented, the average fermentation temperature and the uncontrolled fermentation emissions and fermentation emission reductions (calculated per the emission factors given in District Rule 4694). The information shall be recorded by the tank Permit to Operate number and by wine type, stated as either red wine or white wine. [District Rules 2201 and 4694]

19. When used for wine storage, daily throughput records, including records of filling and emptying operations, the dates of such operations, a unique identifier for each batch, the volume percent ethanol in the batch, and the volume of wine transferred, shall be maintained. [District Rules 2201 and 4694]

20. When used for wine storage, the operator shall record, on a weekly basis, the total gallons of wine contained in the tank and the maximum temperature of the stored wine. [District Rule 4694]

21. Records of total annual fermentation and total annual storage emissions, including calculation methods and parameters used, shall be maintained. [District Rule 1070 and 2201]

22. Separate annual records of total red wine and total white wine produced by fermentation at this facility, based on values reported to the Alcohol and Tobacco Tax and Trade Bureau (TTB), U.S. Department of the Treasury, shall be maintained. [District Rule 1070 and 2201]

DRAFT

CONDITIONS CONTINUE ON NEXT PAGE

23. All records shall be retained on-site for a period of at least five years and made available for District inspection upon request. [District Rules 2201 and 4694]

DRAFT

San Joaquin Valley
Air Pollution Control District

AUTHORITY TO CONSTRUCT

DRAFT

PERMIT NO: N-7855-710-0 **ISSUANCE DATE:** DRAFT

LEGAL OWNER OR OPERATOR: SUTTER HOME WINERY
MAILING ADDRESS: P O BOX 248
ST HELENA, CA 94574-0248

LOCATION: 18667 N JACOB BRACK RD
LODI, CA 95242

EQUIPMENT DESCRIPTION:
202,638 GALLON WHITE WINE FERMENTATION TANK AND WINE STORAGE TANK (TANK 1209) WITH PRESSURE/VACUUM VALVE AND INSULATION

CONDITIONS

1. {98} No air contaminant shall be released into the atmosphere which causes a public nuisance. [District Rule 4102]
2. The VOC emissions rate for fermentation operations in this tank shall not exceed 1.62 lb/day per 1000 gallons of tank capacity. [District Rule 2201]
3. The ethanol content of wine stored in this tank shall not exceed 23.9 percent by volume. [District Rule 2201]
4. When this tank is used for wine storage, the daily tank throughput, in gallons, shall not exceed five times the maximum nominal tank capacity stated on the equipment description. [District Rule 2201]
5. Total combined annual VOC emissions from all wine fermentation and wine storage operations at this facility shall not exceed 292,950 lb. [District Rule 2201]
6. Combined annual VOC emissions from all wine storage operations shall be determined as the sum of the emissions for each individual wine movement based on the volume transferred in each wine movement and the batch-specific wine storage emission factor calculated using the equation(s) specified within this permit. [District Rule 2201]
7. The annual VOC wine storage emission factor (EF) for each wine transfer shall be selected from the following emission factors based on the ethanol content of the wine transferred: For wine with ethanol content less than 14 volume percent: EF = 0.198 lb-VOC/1000 gallons; For wine with ethanol content between 14 and 21 volume percent, EF = 0.314 lb-VOC/1000 gallons; For wine with ethanol content greater than 21 volume percent, EF = 0.363 lb-VOC/1000 gallon. [District Rule 2201]

CONDITIONS CONTINUE ON NEXT PAGE

YOU MUST NOTIFY THE DISTRICT COMPLIANCE DIVISION AT (209) 557-6400 WHEN CONSTRUCTION IS COMPLETED AND PRIOR TO OPERATING THE EQUIPMENT OR MODIFICATIONS AUTHORIZED BY THIS AUTHORITY TO CONSTRUCT. This is NOT a PERMIT TO OPERATE. Approval or denial of a PERMIT TO OPERATE will be made after an inspection to verify that the equipment has been constructed in accordance with the approved plans, specifications and conditions of this Authority to Construct, and to determine if the equipment can be operated in compliance with all Rules and Regulations of the San Joaquin Valley Unified Air Pollution Control District. Unless construction has commenced pursuant to Rule 2050, this Authority to Construct shall expire and application shall be cancelled two years from the date of issuance. The applicant is responsible for complying with all laws, ordinances and regulations of all other governmental agencies which may pertain to the above equipment.

Seyed Sadredin, Executive Director / APCO

DRAFT

DAVID WARNER, Director of Permit Services
N-7855-710-0 : Mar 23 2011 1:25PM -- ROBERTSD : Joint Inspection NOT Required

8. Total annual VOC emissions from wine fermentation operations shall be determined by the following formula: Total annual VOC emissions = (Total Annual Red Wine Production-gal) x (6.2 lb-VOC/1000 gal) + (Total Annual White Wine Production-gal) x (2.5 lb-VOC/1000 gal). [District Rule 2201]

9. When used for wine storage, this tank shall be equipped with and operated with a pressure-vacuum relief valve, which shall operate within 10% of the maximum allowable working pressure of the tank, operate in accordance with the manufacturer's instructions, and be permanently labeled with the operating pressure settings. [District Rules 2201 and 4694]

10. When used for wine storage, the pressure-vacuum relief valve and storage tank shall remain in a gas-tight condition, except when the operating pressure of the tank exceeds the valve set pressure. A gas-tight condition shall be determined by measuring the gas leak in accordance with the procedures in EPA Method 21. [District Rules 2201 and 4694]

11. The temperature of the wine stored in this tank shall be maintained at or below 75 degrees Fahrenheit. For each batch of wine, the operator shall achieve the storage temperature of 75 degrees Fahrenheit or less within 60 days after completing fermentation, and shall maintain records to show when the required storage temperature of 75 degrees Fahrenheit or less was achieved. [District Rules 2201 and 4694]

12. The average fermentation temperature of each batch of must fermented in this tank shall not exceed 95 oF, calculated as the average of all temperature measurements for the batch taken at least every 12 hours over the course of the fermentation. [District Rule 2201]

13. A Three-Year Compliance Plan that demonstrates compliance with the requirements of Section 5.1 of District Rule 4694 for each year of the applicable compliance period shall be submitted to the District by no later than December 1, 2012, and every three years thereafter on or before December 1. [District Rule 4694]

14. A Three-Year Compliance Plan Verification that demonstrates that the Three-Year Compliance Plan elements are in effect shall be submitted to the District by no later than July 1, 2013, and every three years thereafter on or before July 1. [District Rule 4694]

15. An Annual Compliance Plan Demonstration that shows compliance with the applicable requirements of this rule shall be submitted to the District by no later than February 1, 2012, and every year thereafter on or before February 1. [District Rule 4694]

16. Operators using CER to mitigate fermentation emissions shall perform all monitoring and recordkeeping, as established in their approved Three-Year Compliance Plan, and shall maintain all records necessary to demonstrate compliance. [District Rule 4694]

17. Operators using District Obtained Emission Reductions (DOER) shall submit payment of DOER and administrative fees to the District no later than March 1, of the first year in the applicable compliance period. [District Rule 4694]

18. For each batch of must fermented in this tank, the operator shall record the fermentation completion date, the total gallons of must fermented, the average fermentation temperature and the uncontrolled fermentation emissions and fermentation emission reductions (calculated per the emission factors given in District Rule 4694). The information shall be recorded by the tank Permit to Operate number and by wine type, stated as either red wine or white wine. [District Rules 2201 and 4694]

19. When used for wine storage, daily throughput records, including records of filling and emptying operations, the dates of such operations, a unique identifier for each batch, the volume percent ethanol in the batch, and the volume of wine transferred, shall be maintained. [District Rules 2201 and 4694]

20. When used for wine storage, the operator shall record, on a weekly basis, the total gallons of wine contained in the tank and the maximum temperature of the stored wine. [District Rule 4694]

21. Records of total annual fermentation and total annual storage emissions, including calculation methods and parameters used, shall be maintained. [District Rule 1070 and 2201]

22. Separate annual records of total red wine and total white wine produced by fermentation at this facility, based on values reported to the Alcohol and Tobacco Tax and Trade Bureau (TTB), U.S. Department of the Treasury, shall be maintained. [District Rule 1070 and 2201]

DRAFT

CONDITIONS CONTINUE ON NEXT PAGE

23. All records shall be retained on-site for a period of at least five years and made available for District inspection upon request. [District Rules 2201 and 4694]

DRAFT

San Joaquin Valley
Air Pollution Control District

AUTHORITY TO CONSTRUCT

DRAFT

PERMIT NO: N-7855-711-0 **ISSUANCE DATE:** DRAFT

LEGAL OWNER OR OPERATOR: SUTTER HOME WINERY
MAILING ADDRESS: P O BOX 248
ST HELENA, CA 94574-0248

LOCATION: 18667 N JACOB BRACK RD
LODI, CA 95242

EQUIPMENT DESCRIPTION:
202,638 GALLON WHITE WINE FERMENTATION TANK AND WINE STORAGE TANK (TANK 1210) WITH PRESSURE/VACUUM VALVE AND INSULATION

CONDITIONS

1. {98} No air contaminant shall be released into the atmosphere which causes a public nuisance. [District Rule 4102]
2. The VOC emissions rate for fermentation operations in this tank shall not exceed 1.62 lb/day per 1000 gallons of tank capacity. [District Rule 2201]
3. The ethanol content of wine stored in this tank shall not exceed 23.9 percent by volume. [District Rule 2201]
4. When this tank is used for wine storage, the daily tank throughput, in gallons, shall not exceed five times the maximum nominal tank capacity stated on the equipment description. [District Rule 2201]
5. Total combined annual VOC emissions from all wine fermentation and wine storage operations at this facility shall not exceed 292,950 lb. [District Rule 2201]
6. Combined annual VOC emissions from all wine storage operations shall be determined as the sum of the emissions for each individual wine movement based on the volume transferred in each wine movement and the batch-specific wine storage emission factor calculated using the equation(s) specified within this permit. [District Rule 2201]
7. The annual VOC wine storage emission factor (EF) for each wine transfer shall be selected from the following emission factors based on the ethanol content of the wine transferred: For wine with ethanol content less than 14 volume percent: EF = 0.198 lb-VOC/1000 gallons; For wine with ethanol content between 14 and 21 volume percent, EF = 0.314 lb-VOC/1000 gallons; For wine with ethanol content greater than 21 volume percent, EF = 0.363 lb-VOC/1000 gallon. [District Rule 2201]

CONDITIONS CONTINUE ON NEXT PAGE

YOU MUST NOTIFY THE DISTRICT COMPLIANCE DIVISION AT (209) 557-6400 WHEN CONSTRUCTION IS COMPLETED AND PRIOR TO OPERATING THE EQUIPMENT OR MODIFICATIONS AUTHORIZED BY THIS AUTHORITY TO CONSTRUCT. This is NOT a PERMIT TO OPERATE. Approval or denial of a PERMIT TO OPERATE will be made after an inspection to verify that the equipment has been constructed in accordance with the approved plans, specifications and conditions of this Authority to Construct, and to determine if the equipment can be operated in compliance with all Rules and Regulations of the San Joaquin Valley Unified Air Pollution Control District. Unless construction has commenced pursuant to Rule 2050, this Authority to Construct shall expire and application shall be cancelled two years from the date of issuance. The applicant is responsible for complying with all laws, ordinances and regulations of all other governmental agencies which may pertain to the above equipment.

Seyed Sadredin, Executive Director / APCO

DRAFT

DAVID WARNER, Director of Permit Services
N-7855-711-0 : Mar 23 2011 1:25PM -- ROBERTSD : Joint Inspection NOT Required

8. Total annual VOC emissions from wine fermentation operations shall be determined by the following formula: Total annual VOC emissions = (Total Annual Red Wine Production-gal) x (6.2 lb-VOC/1000 gal) + (Total Annual White Wine Production-gal) x (2.5 lb-VOC/1000 gal). [District Rule 2201]

9. When used for wine storage, this tank shall be equipped with and operated with a pressure-vacuum relief valve, which shall operate within 10% of the maximum allowable working pressure of the tank, operate in accordance with the manufacturer's instructions, and be permanently labeled with the operating pressure settings. [District Rules 2201 and 4694]

10. When used for wine storage, the pressure-vacuum relief valve and storage tank shall remain in a gas-tight condition, except when the operating pressure of the tank exceeds the valve set pressure. A gas-tight condition shall be determined by measuring the gas leak in accordance with the procedures in EPA Method 21. [District Rules 2201 and 4694]

11. The temperature of the wine stored in this tank shall be maintained at or below 75 degrees Fahrenheit. For each batch of wine, the operator shall achieve the storage temperature of 75 degrees Fahrenheit or less within 60 days after completing fermentation, and shall maintain records to show when the required storage temperature of 75 degrees Fahrenheit or less was achieved. [District Rules 2201 and 4694]

12. The average fermentation temperature of each batch of must fermented in this tank shall not exceed 95 oF, calculated as the average of all temperature measurements for the batch taken at least every 12 hours over the course of the fermentation. [District Rule 2201]

13. A Three-Year Compliance Plan that demonstrates compliance with the requirements of Section 5.1 of District Rule 4694 for each year of the applicable compliance period shall be submitted to the District by no later than December 1, 2012, and every three years thereafter on or before December 1. [District Rule 4694]

14. A Three-Year Compliance Plan Verification that demonstrates that the Three-Year Compliance Plan elements are in effect shall be submitted to the District by no later than July 1, 2013, and every three years thereafter on or before July 1. [District Rule 4694]

15. An Annual Compliance Plan Demonstration that shows compliance with the applicable requirements of this rule shall be submitted to the District by no later than February 1, 2012, and every year thereafter on or before February 1. [District Rule 4694]

16. Operators using CER to mitigate fermentation emissions shall perform all monitoring and recordkeeping, as established in their approved Three-Year Compliance Plan, and shall maintain all records necessary to demonstrate compliance. [District Rule 4694]

17. Operators using District Obtained Emission Reductions (DOER) shall submit payment of DOER and administrative fees to the District no later than March 1, of the first year in the applicable compliance period. [District Rule 4694]

18. For each batch of must fermented in this tank, the operator shall record the fermentation completion date, the total gallons of must fermented, the average fermentation temperature and the uncontrolled fermentation emissions and fermentation emission reductions (calculated per the emission factors given in District Rule 4694). The information shall be recorded by the tank Permit to Operate number and by wine type, stated as either red wine or white wine. [District Rules 2201 and 4694]

19. When used for wine storage, daily throughput records, including records of filling and emptying operations, the dates of such operations, a unique identifier for each batch, the volume percent ethanol in the batch, and the volume of wine transferred, shall be maintained. [District Rules 2201 and 4694]

20. When used for wine storage, the operator shall record, on a weekly basis, the total gallons of wine contained in the tank and the maximum temperature of the stored wine. [District Rule 4694]

21. Records of total annual fermentation and total annual storage emissions, including calculation methods and parameters used, shall be maintained. [District Rule 1070 and 2201]

22. Separate annual records of total red wine and total white wine produced by fermentation at this facility, based on values reported to the Alcohol and Tobacco Tax and Trade Bureau (TTB), U.S. Department of the Treasury, shall be maintained. [District Rule 1070 and 2201]

DRAFT

CONDITIONS CONTINUE ON NEXT PAGE

23. All records shall be retained on-site for a period of at least five years and made available for District inspection upon request. [District Rules 2201 and 4694]

DRAFT

San Joaquin Valley
Air Pollution Control District

AUTHORITY TO CONSTRUCT

DRAFT

PERMIT NO: N-7855-712-0 **ISSUANCE DATE:** DRAFT

LEGAL OWNER OR OPERATOR: SUTTER HOME WINERY
MAILING ADDRESS: P O BOX 248
ST HELENA, CA 94574-0248

LOCATION: 18667 N JACOB BRACK RD
LODI, CA 95242

EQUIPMENT DESCRIPTION:
202,638 GALLON WHITE WINE FERMENTATION TANK AND WINE STORAGE TANK (TANK 1211) WITH PRESSURE/VACUUM VALVE AND INSULATION

CONDITIONS

1. {98} No air contaminant shall be released into the atmosphere which causes a public nuisance. [District Rule 4102]
2. The VOC emissions rate for fermentation operations in this tank shall not exceed 1.62 lb/day per 1000 gallons of tank capacity. [District Rule 2201]
3. The ethanol content of wine stored in this tank shall not exceed 23.9 percent by volume. [District Rule 2201]
4. When this tank is used for wine storage, the daily tank throughput, in gallons, shall not exceed five times the maximum nominal tank capacity stated on the equipment description. [District Rule 2201]
5. Total combined annual VOC emissions from all wine fermentation and wine storage operations at this facility shall not exceed 292,950 lb. [District Rule 2201]
6. Combined annual VOC emissions from all wine storage operations shall be determined as the sum of the emissions for each individual wine movement based on the volume transferred in each wine movement and the batch-specific wine storage emission factor calculated using the equation(s) specified within this permit. [District Rule 2201]
7. The annual VOC wine storage emission factor (EF) for each wine transfer shall be selected from the following emission factors based on the ethanol content of the wine transferred: For wine with ethanol content less than 14 volume percent: EF = 0.198 lb-VOC/1000 gallons; For wine with ethanol content between 14 and 21 volume percent, EF = 0.314 lb-VOC/1000 gallons; For wine with ethanol content greater than 21 volume percent, EF = 0.363 lb-VOC/1000 gallon. [District Rule 2201]

CONDITIONS CONTINUE ON NEXT PAGE

YOU MUST NOTIFY THE DISTRICT COMPLIANCE DIVISION AT (209) 557-6400 WHEN CONSTRUCTION IS COMPLETED AND PRIOR TO OPERATING THE EQUIPMENT OR MODIFICATIONS AUTHORIZED BY THIS AUTHORITY TO CONSTRUCT. This is NOT a PERMIT TO OPERATE. Approval or denial of a PERMIT TO OPERATE will be made after an inspection to verify that the equipment has been constructed in accordance with the approved plans, specifications and conditions of this Authority to Construct, and to determine if the equipment can be operated in compliance with all Rules and Regulations of the San Joaquin Valley Unified Air Pollution Control District. Unless construction has commenced pursuant to Rule 2050, this Authority to Construct shall expire and application shall be cancelled two years from the date of issuance. The applicant is responsible for complying with all laws, ordinances and regulations of all other governmental agencies which may pertain to the above equipment.

Seyed Sadredin, Executive Director / APCO

DRAFT

DAVID WARNER, Director of Permit Services
N-7855-712-0 : Mar 23 2011 1:25PM – ROBERTSD : Joint Inspection NOT Required

8. Total annual VOC emissions from wine fermentation operations shall be determined by the following formula: Total annual VOC emissions = (Total Annual Red Wine Production-gal) x (6.2 lb-VOC/1000 gal) + (Total Annual White Wine Production-gal) x (2.5 lb-VOC/1000 gal). [District Rule 2201]

9. When used for wine storage, this tank shall be equipped with and operated with a pressure-vacuum relief valve, which shall operate within 10% of the maximum allowable working pressure of the tank, operate in accordance with the manufacturer's instructions, and be permanently labeled with the operating pressure settings. [District Rules 2201 and 4694]

10. When used for wine storage, the pressure-vacuum relief valve and storage tank shall remain in a gas-tight condition, except when the operating pressure of the tank exceeds the valve set pressure. A gas-tight condition shall be determined by measuring the gas leak in accordance with the procedures in EPA Method 21. [District Rules 2201 and 4694]

11. The temperature of the wine stored in this tank shall be maintained at or below 75 degrees Fahrenheit. For each batch of wine, the operator shall achieve the storage temperature of 75 degrees Fahrenheit or less within 60 days after completing fermentation, and shall maintain records to show when the required storage temperature of 75 degrees Fahrenheit or less was achieved. [District Rules 2201 and 4694]

12. The average fermentation temperature of each batch of must fermented in this tank shall not exceed 95 oF, calculated as the average of all temperature measurements for the batch taken at least every 12 hours over the course of the fermentation. [District Rule 2201]

13. A Three-Year Compliance Plan that demonstrates compliance with the requirements of Section 5.1 of District Rule 4694 for each year of the applicable compliance period shall be submitted to the District by no later than December 1, 2012, and every three years thereafter on or before December 1. [District Rule 4694]

14. A Three-Year Compliance Plan Verification that demonstrates that the Three-Year Compliance Plan elements are in effect shall be submitted to the District by no later than July 1, 2013, and every three years thereafter on or before July 1. [District Rule 4694]

15. An Annual Compliance Plan Demonstration that shows compliance with the applicable requirements of this rule shall be submitted to the District by no later than February 1, 2012, and every year thereafter on or before February 1. [District Rule 4694]

16. Operators using CER to mitigate fermentation emissions shall perform all monitoring and recordkeeping, as established in their approved Three-Year Compliance Plan, and shall maintain all records necessary to demonstrate compliance. [District Rule 4694]

17. Operators using District Obtained Emission Reductions (DOER) shall submit payment of DOER and administrative fees to the District no later than March 1, of the first year in the applicable compliance period. [District Rule 4694]

18. For each batch of must fermented in this tank, the operator shall record the fermentation completion date, the total gallons of must fermented, the average fermentation temperature and the uncontrolled fermentation emissions and fermentation emission reductions (calculated per the emission factors given in District Rule 4694). The information shall be recorded by the tank Permit to Operate number and by wine type, stated as either red wine or white wine. [District Rules 2201 and 4694]

19. When used for wine storage, daily throughput records, including records of filling and emptying operations, the dates of such operations, a unique identifier for each batch, the volume percent ethanol in the batch, and the volume of wine transferred, shall be maintained. [District Rules 2201 and 4694]

20. When used for wine storage, the operator shall record, on a weekly basis, the total gallons of wine contained in the tank and the maximum temperature of the stored wine. [District Rule 4694]

21. Records of total annual fermentation and total annual storage emissions, including calculation methods and parameters used, shall be maintained. [District Rule 1070 and 2201]

22. Separate annual records of total red wine and total white wine produced by fermentation at this facility, based on values reported to the Alcohol and Tobacco Tax and Trade Bureau (TTB), U.S. Department of the Treasury, shall be maintained. [District Rule 1070 and 2201]

DRAFT

CONDITIONS CONTINUE ON NEXT PAGE

23. All records shall be retained on-site for a period of at least five years and made available for District inspection upon request. [District Rules 2201 and 4694]

DRAFT

San Joaquin Valley
Air Pollution Control District

AUTHORITY TO CONSTRUCT

DRAFT

PERMIT NO: N-7855-713-0 **ISSUANCE DATE:** DRAFT

LEGAL OWNER OR OPERATOR: SUTTER HOME WINERY
MAILING ADDRESS: P O BOX 248
ST HELENA, CA 94574-0248

LOCATION: 18667 N JACOB BRACK RD
LODI, CA 95242

EQUIPMENT DESCRIPTION:
202,638 GALLON WHITE WINE FERMENTATION TANK AND WINE STORAGE TANK (TANK 1212) WITH PRESSURE/VACUUM VALVE AND INSULATION

CONDITIONS

1. {98} No air contaminant shall be released into the atmosphere which causes a public nuisance. [District Rule 4102]
2. The VOC emissions rate for fermentation operations in this tank shall not exceed 1.62 lb/day per 1000 gallons of tank capacity. [District Rule 2201]
3. The ethanol content of wine stored in this tank shall not exceed 23.9 percent by volume. [District Rule 2201]
4. When this tank is used for wine storage, the daily tank throughput, in gallons, shall not exceed five times the maximum nominal tank capacity stated on the equipment description. [District Rule 2201]
5. Total combined annual VOC emissions from all wine fermentation and wine storage operations at this facility shall not exceed 292,950 lb. [District Rule 2201]
6. Combined annual VOC emissions from all wine storage operations shall be determined as the sum of the emissions for each individual wine movement based on the volume transferred in each wine movement and the batch-specific wine storage emission factor calculated using the equation(s) specified within this permit. [District Rule 2201]
7. The annual VOC wine storage emission factor (EF) for each wine transfer shall be selected from the following emission factors based on the ethanol content of the wine transferred: For wine with ethanol content less than 14 volume percent: EF = 0.198 lb-VOC/1000 gallons; For wine with ethanol content between 14 and 21 volume percent, EF = 0.314 lb-VOC/1000 gallons; For wine with ethanol content greater than 21 volume percent, EF = 0.363 lb-VOC/1000 gallon. [District Rule 2201]

CONDITIONS CONTINUE ON NEXT PAGE

YOU MUST NOTIFY THE DISTRICT COMPLIANCE DIVISION AT (209) 557-6400 WHEN CONSTRUCTION IS COMPLETED AND PRIOR TO OPERATING THE EQUIPMENT OR MODIFICATIONS AUTHORIZED BY THIS AUTHORITY TO CONSTRUCT. This is NOT a PERMIT TO OPERATE. Approval or denial of a PERMIT TO OPERATE will be made after an inspection to verify that the equipment has been constructed in accordance with the approved plans, specifications and conditions of this Authority to Construct, and to determine if the equipment can be operated in compliance with all Rules and Regulations of the San Joaquin Valley Unified Air Pollution Control District. Unless construction has commenced pursuant to Rule 2050, this Authority to Construct shall expire and application shall be cancelled two years from the date of issuance. The applicant is responsible for complying with all laws, ordinances and regulations of all other governmental agencies which may pertain to the above equipment.

Seyed Sadredin, Executive Director / APCO

DRAFT

DAVID WARNER, Director of Permit Services
N-7855-713-0 : Mar 23 2011 1:26PM -- ROBERTSD : Joint Inspection NOT Required

8. Total annual VOC emissions from wine fermentation operations shall be determined by the following formula: Total annual VOC emissions = (Total Annual Red Wine Production-gal) x (6.2 lb-VOC/1000 gal) + (Total Annual White Wine Production-gal) x (2.5 lb-VOC/1000 gal). [District Rule 2201]

9. When used for wine storage, this tank shall be equipped with and operated with a pressure-vacuum relief valve, which shall operate within 10% of the maximum allowable working pressure of the tank, operate in accordance with the manufacturer's instructions, and be permanently labeled with the operating pressure settings. [District Rules 2201 and 4694]

10. When used for wine storage, the pressure-vacuum relief valve and storage tank shall remain in a gas-tight condition, except when the operating pressure of the tank exceeds the valve set pressure. A gas-tight condition shall be determined by measuring the gas leak in accordance with the procedures in EPA Method 21. [District Rules 2201 and 4694]

11. The temperature of the wine stored in this tank shall be maintained at or below 75 degrees Fahrenheit. For each batch of wine, the operator shall achieve the storage temperature of 75 degrees Fahrenheit or less within 60 days after completing fermentation, and shall maintain records to show when the required storage temperature of 75 degrees Fahrenheit or less was achieved. [District Rules 2201 and 4694]

12. The average fermentation temperature of each batch of must fermented in this tank shall not exceed 95 oF, calculated as the average of all temperature measurements for the batch taken at least every 12 hours over the course of the fermentation. [District Rule 2201]

13. A Three-Year Compliance Plan that demonstrates compliance with the requirements of Section 5.1 of District Rule 4694 for each year of the applicable compliance period shall be submitted to the District by no later than December 1, 2012, and every three years thereafter on or before December 1. [District Rule 4694]

14. A Three-Year Compliance Plan Verification that demonstrates that the Three-Year Compliance Plan elements are in effect shall be submitted to the District by no later than July 1, 2013, and every three years thereafter on or before July 1. [District Rule 4694]

15. An Annual Compliance Plan Demonstration that shows compliance with the applicable requirements of this rule shall be submitted to the District by no later than February 1, 2012, and every year thereafter on or before February 1. [District Rule 4694]

16. Operators using CER to mitigate fermentation emissions shall perform all monitoring and recordkeeping, as established in their approved Three-Year Compliance Plan, and shall maintain all records necessary to demonstrate compliance. [District Rule 4694]

17. Operators using District Obtained Emission Reductions (DOER) shall submit payment of DOER and administrative fees to the District no later than March 1, of the first year in the applicable compliance period. [District Rule 4694]

18. For each batch of must fermented in this tank, the operator shall record the fermentation completion date, the total gallons of must fermented, the average fermentation temperature and the uncontrolled fermentation emissions and fermentation emission reductions (calculated per the emission factors given in District Rule 4694). The information shall be recorded by the tank Permit to Operate number and by wine type, stated as either red wine or white wine. [District Rules 2201 and 4694]

19. When used for wine storage, daily throughput records, including records of filling and emptying operations, the dates of such operations, a unique identifier for each batch, the volume percent ethanol in the batch, and the volume of wine transferred, shall be maintained. [District Rules 2201 and 4694]

20. When used for wine storage, the operator shall record, on a weekly basis, the total gallons of wine contained in the tank and the maximum temperature of the stored wine. [District Rule 4694]

21. Records of total annual fermentation and total annual storage emissions, including calculation methods and parameters used, shall be maintained. [District Rule 1070 and 2201]

22. Separate annual records of total red wine and total white wine produced by fermentation at this facility, based on values reported to the Alcohol and Tobacco Tax and Trade Bureau (TTB), U.S. Department of the Treasury, shall be maintained. [District Rule 1070 and 2201]

DRAFT

CONDITIONS CONTINUE ON NEXT PAGE

23. All records shall be retained on-site for a period of at least five years and made available for District inspection upon request. [District Rules 2201 and 4694]

DRAFT

San Joaquin Valley
Air Pollution Control District

AUTHORITY TO CONSTRUCT

DRAFT

PERMIT NO: N-7855-714-0 **ISSUANCE DATE:** DRAFT

LEGAL OWNER OR OPERATOR: SUTTER HOME WINERY
MAILING ADDRESS: P O BOX 248
ST HELENA, CA 94574-0248

LOCATION: 18667 N JACOB BRACK RD
LODI, CA 95242

EQUIPMENT DESCRIPTION:
202,638 GALLON WHITE WINE FERMENTATION TANK AND WINE STORAGE TANK (TANK 1213) WITH PRESSURE/VACUUM VALVE AND INSULATION

CONDITIONS

1. {98} No air contaminant shall be released into the atmosphere which causes a public nuisance. [District Rule 4102]
2. The VOC emissions rate for fermentation operations in this tank shall not exceed 1.62 lb/day per 1000 gallons of tank capacity. [District Rule 2201]
3. The ethanol content of wine stored in this tank shall not exceed 23.9 percent by volume. [District Rule 2201]
4. When this tank is used for wine storage, the daily tank throughput, in gallons, shall not exceed five times the maximum nominal tank capacity stated on the equipment description. [District Rule 2201]
5. Total combined annual VOC emissions from all wine fermentation and wine storage operations at this facility shall not exceed 292,950 lb. [District Rule 2201]
6. Combined annual VOC emissions from all wine storage operations shall be determined as the sum of the emissions for each individual wine movement based on the volume transferred in each wine movement and the batch-specific wine storage emission factor calculated using the equation(s) specified within this permit. [District Rule 2201]
7. The annual VOC wine storage emission factor (EF) for each wine transfer shall be selected from the following emission factors based on the ethanol content of the wine transferred: For wine with ethanol content less than 14 volume percent: EF = 0.198 lb-VOC/1000 gallons; For wine with ethanol content between 14 and 21 volume percent, EF = 0.314 lb-VOC/1000 gallons; For wine with ethanol content greater than 21 volume percent, EF = 0.363 lb-VOC/1000 gallon. [District Rule 2201]

CONDITIONS CONTINUE ON NEXT PAGE

YOU MUST NOTIFY THE DISTRICT COMPLIANCE DIVISION AT (209) 557-6400 WHEN CONSTRUCTION IS COMPLETED AND PRIOR TO OPERATING THE EQUIPMENT OR MODIFICATIONS AUTHORIZED BY THIS AUTHORITY TO CONSTRUCT. This is NOT a PERMIT TO OPERATE. Approval or denial of a PERMIT TO OPERATE will be made after an inspection to verify that the equipment has been constructed in accordance with the approved plans, specifications and conditions of this Authority to Construct, and to determine if the equipment can be operated in compliance with all Rules and Regulations of the San Joaquin Valley Unified Air Pollution Control District. Unless construction has commenced pursuant to Rule 2050, this Authority to Construct shall expire and application shall be cancelled two years from the date of issuance. The applicant is responsible for complying with all laws, ordinances and regulations of all other governmental agencies which may pertain to the above equipment.

Seyed Sadredin, Executive Director / APCO

DRAFT

DAVID WARNER, Director of Permit Services
N-7855-714-0 : Mar 23 2011 1:26PM -- ROBERTSD : Joint Inspection NOT Required

8. Total annual VOC emissions from wine fermentation operations shall be determined by the following formula: Total annual VOC emissions = (Total Annual Red Wine Production-gal) x (6.2 lb-VOC/1000 gal) + (Total Annual White Wine Production-gal) x (2.5 lb-VOC/1000 gal). [District Rule 2201]

9. When used for wine storage, this tank shall be equipped with and operated with a pressure-vacuum relief valve, which shall operate within 10% of the maximum allowable working pressure of the tank, operate in accordance with the manufacturer's instructions, and be permanently labeled with the operating pressure settings. [District Rules 2201 and 4694]

10. When used for wine storage, the pressure-vacuum relief valve and storage tank shall remain in a gas-tight condition, except when the operating pressure of the tank exceeds the valve set pressure. A gas-tight condition shall be determined by measuring the gas leak in accordance with the procedures in EPA Method 21. [District Rules 2201 and 4694]

11. The temperature of the wine stored in this tank shall be maintained at or below 75 degrees Fahrenheit. For each batch of wine, the operator shall achieve the storage temperature of 75 degrees Fahrenheit or less within 60 days after completing fermentation, and shall maintain records to show when the required storage temperature of 75 degrees Fahrenheit or less was achieved. [District Rules 2201 and 4694]

12. The average fermentation temperature of each batch of must fermented in this tank shall not exceed 95 oF, calculated as the average of all temperature measurements for the batch taken at least every 12 hours over the course of the fermentation. [District Rule 2201]

13. A Three-Year Compliance Plan that demonstrates compliance with the requirements of Section 5.1 of District Rule 4694 for each year of the applicable compliance period shall be submitted to the District by no later than December 1, 2012, and every three years thereafter on or before December 1. [District Rule 4694]

14. A Three-Year Compliance Plan Verification that demonstrates that the Three-Year Compliance Plan elements are in effect shall be submitted to the District by no later than July 1, 2013, and every three years thereafter on or before July 1. [District Rule 4694]

15. An Annual Compliance Plan Demonstration that shows compliance with the applicable requirements of this rule shall be submitted to the District by no later than February 1, 2012, and every year thereafter on or before February 1. [District Rule 4694]

16. Operators using CER to mitigate fermentation emissions shall perform all monitoring and recordkeeping, as established in their approved Three-Year Compliance Plan, and shall maintain all records necessary to demonstrate compliance. [District Rule 4694]

17. Operators using District Obtained Emission Reductions (DOER) shall submit payment of DOER and administrative fees to the District no later than March 1, of the first year in the applicable compliance period. [District Rule 4694]

18. For each batch of must fermented in this tank, the operator shall record the fermentation completion date, the total gallons of must fermented, the average fermentation temperature and the uncontrolled fermentation emissions and fermentation emission reductions (calculated per the emission factors given in District Rule 4694). The information shall be recorded by the tank Permit to Operate number and by wine type, stated as either red wine or white wine. [District Rules 2201 and 4694]

19. When used for wine storage, daily throughput records, including records of filling and emptying operations, the dates of such operations, a unique identifier for each batch, the volume percent ethanol in the batch, and the volume of wine transferred, shall be maintained. [District Rules 2201 and 4694]

20. When used for wine storage, the operator shall record, on a weekly basis, the total gallons of wine contained in the tank and the maximum temperature of the stored wine. [District Rule 4694]

21. Records of total annual fermentation and total annual storage emissions, including calculation methods and parameters used, shall be maintained. [District Rule 1070 and 2201]

22. Separate annual records of total red wine and total white wine produced by fermentation at this facility, based on values reported to the Alcohol and Tobacco Tax and Trade Bureau (TTB), U.S. Department of the Treasury, shall be maintained. [District Rule 1070 and 2201]

DRAFT

CONDITIONS CONTINUE ON NEXT PAGE

23. All records shall be retained on-site for a period of at least five years and made available for District inspection upon request. [District Rules 2201 and 4694]

DRAFT

San Joaquin Valley
Air Pollution Control District

AUTHORITY TO CONSTRUCT

DRAFT

PERMIT NO: N-7855-715-0 **ISSUANCE DATE:** DRAFT

LEGAL OWNER OR OPERATOR: SUTTER HOME WINERY
MAILING ADDRESS: P O BOX 248
ST HELENA, CA 94574-0248

LOCATION: 18667 N JACOB BRACK RD
LODI, CA 95242

EQUIPMENT DESCRIPTION:
202,638 GALLON WHITE WINE FERMENTATION TANK AND WINE STORAGE TANK (TANK 1214) WITH PRESSURE/VACUUM VALVE AND INSULATION

CONDITIONS

1. {98} No air contaminant shall be released into the atmosphere which causes a public nuisance. [District Rule 4102]
2. The VOC emissions rate for fermentation operations in this tank shall not exceed 1.62 lb/day per 1000 gallons of tank capacity. [District Rule 2201]
3. The ethanol content of wine stored in this tank shall not exceed 23.9 percent by volume. [District Rule 2201]
4. When this tank is used for wine storage, the daily tank throughput, in gallons, shall not exceed five times the maximum nominal tank capacity stated on the equipment description. [District Rule 2201]
5. Total combined annual VOC emissions from all wine fermentation and wine storage operations at this facility shall not exceed 292,950 lb. [District Rule 2201]
6. Combined annual VOC emissions from all wine storage operations shall be determined as the sum of the emissions for each individual wine movement based on the volume transferred in each wine movement and the batch-specific wine storage emission factor calculated using the equation(s) specified within this permit. [District Rule 2201]
7. The annual VOC wine storage emission factor (EF) for each wine transfer shall be selected from the following emission factors based on the ethanol content of the wine transferred: For wine with ethanol content less than 14 volume percent: EF = 0.198 lb-VOC/1000 gallons; For wine with ethanol content between 14 and 21 volume percent, EF = 0.314 lb-VOC/1000 gallons; For wine with ethanol content greater than 21 volume percent, EF = 0.363 lb-VOC/1000 gallon. [District Rule 2201]

CONDITIONS CONTINUE ON NEXT PAGE

YOU MUST NOTIFY THE DISTRICT COMPLIANCE DIVISION AT (209) 557-6400 WHEN CONSTRUCTION IS COMPLETED AND PRIOR TO OPERATING THE EQUIPMENT OR MODIFICATIONS AUTHORIZED BY THIS AUTHORITY TO CONSTRUCT. This is NOT a PERMIT TO OPERATE. Approval or denial of a PERMIT TO OPERATE will be made after an inspection to verify that the equipment has been constructed in accordance with the approved plans, specifications and conditions of this Authority to Construct, and to determine if the equipment can be operated in compliance with all Rules and Regulations of the San Joaquin Valley Unified Air Pollution Control District. Unless construction has commenced pursuant to Rule 2050, this Authority to Construct shall expire and application shall be cancelled two years from the date of issuance. The applicant is responsible for complying with all laws, ordinances and regulations of all other governmental agencies which may pertain to the above equipment.

Seyed Sadredin, Executive Director / APCO

DRAFT

DAVID WARNER, Director of Permit Services
N-7855-715-0 : Mar 23 2011 1:26PM -- ROBERTSD : Joint Inspection NOT Required

8. Total annual VOC emissions from wine fermentation operations shall be determined by the following formula: Total annual VOC emissions = (Total Annual Red Wine Production-gal) x (6.2 lb-VOC/1000 gal) + (Total Annual White Wine Production-gal) x (2.5 lb-VOC/1000 gal). [District Rule 2201]
9. When used for wine storage, this tank shall be equipped with and operated with a pressure-vacuum relief valve, which shall operate within 10% of the maximum allowable working pressure of the tank, operate in accordance with the manufacturer's instructions, and be permanently labeled with the operating pressure settings. [District Rules 2201 and 4694]
10. When used for wine storage, the pressure-vacuum relief valve and storage tank shall remain in a gas-tight condition, except when the operating pressure of the tank exceeds the valve set pressure. A gas-tight condition shall be determined by measuring the gas leak in accordance with the procedures in EPA Method 21. [District Rules 2201 and 4694]
11. The temperature of the wine stored in this tank shall be maintained at or below 75 degrees Fahrenheit. For each batch of wine, the operator shall achieve the storage temperature of 75 degrees Fahrenheit or less within 60 days after completing fermentation, and shall maintain records to show when the required storage temperature of 75 degrees Fahrenheit or less was achieved. [District Rules 2201 and 4694]
12. The average fermentation temperature of each batch of must fermented in this tank shall not exceed 95 oF, calculated as the average of all temperature measurements for the batch taken at least every 12 hours over the course of the fermentation. [District Rule 2201]
13. A Three-Year Compliance Plan that demonstrates compliance with the requirements of Section 5.1 of District Rule 4694 for each year of the applicable compliance period shall be submitted to the District by no later than December 1, 2012, and every three years thereafter on or before December 1. [District Rule 4694]
14. A Three-Year Compliance Plan Verification that demonstrates that the Three-Year Compliance Plan elements are in effect shall be submitted to the District by no later than July 1, 2013, and every three years thereafter on or before July 1. [District Rule 4694]
15. An Annual Compliance Plan Demonstration that shows compliance with the applicable requirements of this rule shall be submitted to the District by no later than February 1, 2012, and every year thereafter on or before February 1. [District Rule 4694]
16. Operators using CER to mitigate fermentation emissions shall perform all monitoring and recordkeeping, as established in their approved Three-Year Compliance Plan, and shall maintain all records necessary to demonstrate compliance. [District Rule 4694]
17. Operators using District Obtained Emission Reductions (DOER) shall submit payment of DOER and administrative fees to the District no later than March 1, of the first year in the applicable compliance period. [District Rule 4694]
18. For each batch of must fermented in this tank, the operator shall record the fermentation completion date, the total gallons of must fermented, the average fermentation temperature and the uncontrolled fermentation emissions and fermentation emission reductions (calculated per the emission factors given in District Rule 4694). The information shall be recorded by the tank Permit to Operate number and by wine type, stated as either red wine or white wine. [District Rules 2201 and 4694]
19. When used for wine storage, daily throughput records, including records of filling and emptying operations, the dates of such operations, a unique identifier for each batch, the volume percent ethanol in the batch, and the volume of wine transferred, shall be maintained. [District Rules 2201 and 4694]
20. When used for wine storage, the operator shall record, on a weekly basis, the total gallons of wine contained in the tank and the maximum temperature of the stored wine. [District Rule 4694]
21. Records of total annual fermentation and total annual storage emissions, including calculation methods and parameters used, shall be maintained. [District Rule 1070 and 2201]
22. Separate annual records of total red wine and total white wine produced by fermentation at this facility, based on values reported to the Alcohol and Tobacco Tax and Trade Bureau (TTB), U.S. Department of the Treasury, shall be maintained. [District Rule 1070 and 2201]

DRAFT

CONDITIONS CONTINUE ON NEXT PAGE

23. All records shall be retained on-site for a period of at least five years and made available for District inspection upon request. [District Rules 2201 and 4694]

DRAFT

San Joaquin Valley
Air Pollution Control District

AUTHORITY TO CONSTRUCT

DRAFT

PERMIT NO: N-7855-716-0 **ISSUANCE DATE:** DRAFT

LEGAL OWNER OR OPERATOR: SUTTER HOME WINERY
MAILING ADDRESS: P O BOX 248
ST HELENA, CA 94574-0248

LOCATION: 18667 N JACOB BRACK RD
LODI, CA 95242

EQUIPMENT DESCRIPTION:
202,638 GALLON WHITE WINE FERMENTATION TANK AND WINE STORAGE TANK (TANK 1215) WITH PRESSURE/VACUUM VALVE AND INSULATION

CONDITIONS

1. {98} No air contaminant shall be released into the atmosphere which causes a public nuisance. [District Rule 4102]
2. The VOC emissions rate for fermentation operations in this tank shall not exceed 1.62 lb/day per 1000 gallons of tank capacity. [District Rule 2201]
3. The ethanol content of wine stored in this tank shall not exceed 23.9 percent by volume. [District Rule 2201]
4. When this tank is used for wine storage, the daily tank throughput, in gallons, shall not exceed five times the maximum nominal tank capacity stated on the equipment description. [District Rule 2201]
5. Total combined annual VOC emissions from all wine fermentation and wine storage operations at this facility shall not exceed 292,950 lb. [District Rule 2201]
6. Combined annual VOC emissions from all wine storage operations shall be determined as the sum of the emissions for each individual wine movement based on the volume transferred in each wine movement and the batch-specific wine storage emission factor calculated using the equation(s) specified within this permit. [District Rule 2201]
7. The annual VOC wine storage emission factor (EF) for each wine transfer shall be selected from the following emission factors based on the ethanol content of the wine transferred: For wine with ethanol content less than 14 volume percent: EF = 0.198 lb-VOC/1000 gallons; For wine with ethanol content between 14 and 21 volume percent, EF = 0.314 lb-VOC/1000 gallons; For wine with ethanol content greater than 21 volume percent, EF = 0.363 lb-VOC/1000 gallon. [District Rule 2201]

CONDITIONS CONTINUE ON NEXT PAGE

YOU MUST NOTIFY THE DISTRICT COMPLIANCE DIVISION AT (209) 557-6400 WHEN CONSTRUCTION IS COMPLETED AND PRIOR TO OPERATING THE EQUIPMENT OR MODIFICATIONS AUTHORIZED BY THIS AUTHORITY TO CONSTRUCT. This is NOT a PERMIT TO OPERATE. Approval or denial of a PERMIT TO OPERATE will be made after an inspection to verify that the equipment has been constructed in accordance with the approved plans, specifications and conditions of this Authority to Construct, and to determine if the equipment can be operated in compliance with all Rules and Regulations of the San Joaquin Valley Unified Air Pollution Control District. Unless construction has commenced pursuant to Rule 2050, this Authority to Construct shall expire and application shall be cancelled two years from the date of issuance. The applicant is responsible for complying with all laws, ordinances and regulations of all other governmental agencies which may pertain to the above equipment.

Seyed Sadredin, Executive Director / APCO

DRAFT

DAVID WARNER, Director of Permit Services
N-7855-716-0 : Mar 23 2011 1:26PM -- ROBERTSD : Joint Inspection NOT Required

8. Total annual VOC emissions from wine fermentation operations shall be determined by the following formula: Total annual VOC emissions = (Total Annual Red Wine Production-gal) x (6.2 lb-VOC/1000 gal) + (Total Annual White Wine Production-gal) x (2.5 lb-VOC/1000 gal). [District Rule 2201]
9. When used for wine storage, this tank shall be equipped with and operated with a pressure-vacuum relief valve, which shall operate within 10% of the maximum allowable working pressure of the tank, operate in accordance with the manufacturer's instructions, and be permanently labeled with the operating pressure settings. [District Rules 2201 and 4694]
10. When used for wine storage, the pressure-vacuum relief valve and storage tank shall remain in a gas-tight condition, except when the operating pressure of the tank exceeds the valve set pressure. A gas-tight condition shall be determined by measuring the gas leak in accordance with the procedures in EPA Method 21. [District Rules 2201 and 4694]
11. The temperature of the wine stored in this tank shall be maintained at or below 75 degrees Fahrenheit. For each batch of wine, the operator shall achieve the storage temperature of 75 degrees Fahrenheit or less within 60 days after completing fermentation, and shall maintain records to show when the required storage temperature of 75 degrees Fahrenheit or less was achieved. [District Rules 2201 and 4694]
12. The average fermentation temperature of each batch of must fermented in this tank shall not exceed 95 oF, calculated as the average of all temperature measurements for the batch taken at least every 12 hours over the course of the fermentation. [District Rule 2201]
13. A Three-Year Compliance Plan that demonstrates compliance with the requirements of Section 5.1 of District Rule 4694 for each year of the applicable compliance period shall be submitted to the District by no later than December 1, 2012, and every three years thereafter on or before December 1. [District Rule 4694]
14. A Three-Year Compliance Plan Verification that demonstrates that the Three-Year Compliance Plan elements are in effect shall be submitted to the District by no later than July 1, 2013, and every three years thereafter on or before July 1. [District Rule 4694]
15. An Annual Compliance Plan Demonstration that shows compliance with the applicable requirements of this rule shall be submitted to the District by no later than February 1, 2012, and every year thereafter on or before February 1. [District Rule 4694]
16. Operators using CER to mitigate fermentation emissions shall perform all monitoring and recordkeeping, as established in their approved Three-Year Compliance Plan, and shall maintain all records necessary to demonstrate compliance. [District Rule 4694]
17. Operators using District Obtained Emission Reductions (DOER) shall submit payment of DOER and administrative fees to the District no later than March 1, of the first year in the applicable compliance period. [District Rule 4694]
18. For each batch of must fermented in this tank, the operator shall record the fermentation completion date, the total gallons of must fermented, the average fermentation temperature and the uncontrolled fermentation emissions and fermentation emission reductions (calculated per the emission factors given in District Rule 4694). The information shall be recorded by the tank Permit to Operate number and by wine type, stated as either red wine or white wine. [District Rules 2201 and 4694]
19. When used for wine storage, daily throughput records, including records of filling and emptying operations, the dates of such operations, a unique identifier for each batch, the volume percent ethanol in the batch, and the volume of wine transferred, shall be maintained. [District Rules 2201 and 4694]
20. When used for wine storage, the operator shall record, on a weekly basis, the total gallons of wine contained in the tank and the maximum temperature of the stored wine. [District Rule 4694]
21. Records of total annual fermentation and total annual storage emissions, including calculation methods and parameters used, shall be maintained. [District Rule 1070 and 2201]
22. Separate annual records of total red wine and total white wine produced by fermentation at this facility, based on values reported to the Alcohol and Tobacco Tax and Trade Bureau (TTB), U.S. Department of the Treasury, shall be maintained. [District Rule 1070 and 2201]

DRAFT

CONDITIONS CONTINUE ON NEXT PAGE

23. All records shall be retained on-site for a period of at least five years and made available for District inspection upon request. [District Rules 2201 and 4694]

DRAFT

San Joaquin Valley
Air Pollution Control District

AUTHORITY TO CONSTRUCT

DRAFT

PERMIT NO: N-7855-717-0 **ISSUANCE DATE:** DRAFT

LEGAL OWNER OR OPERATOR: SUTTER HOME WINERY
MAILING ADDRESS: P O BOX 248
ST HELENA, CA 94574-0248

LOCATION: 18667 N JACOB BRACK RD
LODI, CA 95242

EQUIPMENT DESCRIPTION:
202,638 GALLON WHITE WINE FERMENTATION TANK AND WINE STORAGE TANK (TANK 1216) WITH PRESSURE/VACUUM VALVE AND INSULATION

CONDITIONS

1. {98} No air contaminant shall be released into the atmosphere which causes a public nuisance. [District Rule 4102]
2. The VOC emissions rate for fermentation operations in this tank shall not exceed 1.62 lb/day per 1000 gallons of tank capacity. [District Rule 2201]
3. The ethanol content of wine stored in this tank shall not exceed 23.9 percent by volume. [District Rule 2201]
4. When this tank is used for wine storage, the daily tank throughput, in gallons, shall not exceed five times the maximum nominal tank capacity stated on the equipment description. [District Rule 2201]
5. Total combined annual VOC emissions from all wine fermentation and wine storage operations at this facility shall not exceed 292,950 lb. [District Rule 2201]
6. Combined annual VOC emissions from all wine storage operations shall be determined as the sum of the emissions for each individual wine movement based on the volume transferred in each wine movement and the batch-specific wine storage emission factor calculated using the equation(s) specified within this permit. [District Rule 2201]
7. The annual VOC wine storage emission factor (EF) for each wine transfer shall be selected from the following emission factors based on the ethanol content of the wine transferred: For wine with ethanol content less than 14 volume percent: EF = 0.198 lb-VOC/1000 gallons; For wine with ethanol content between 14 and 21 volume percent, EF = 0.314 lb-VOC/1000 gallons; For wine with ethanol content greater than 21 volume percent, EF = 0.363 lb-VOC/1000 gallon. [District Rule 2201]

CONDITIONS CONTINUE ON NEXT PAGE

YOU MUST NOTIFY THE DISTRICT COMPLIANCE DIVISION AT (209) 557-6400 WHEN CONSTRUCTION IS COMPLETED AND PRIOR TO OPERATING THE EQUIPMENT OR MODIFICATIONS AUTHORIZED BY THIS AUTHORITY TO CONSTRUCT. This is NOT a PERMIT TO OPERATE. Approval or denial of a PERMIT TO OPERATE will be made after an inspection to verify that the equipment has been constructed in accordance with the approved plans, specifications and conditions of this Authority to Construct, and to determine if the equipment can be operated in compliance with all Rules and Regulations of the San Joaquin Valley Unified Air Pollution Control District. Unless construction has commenced pursuant to Rule 2050, this Authority to Construct shall expire and application shall be cancelled two years from the date of issuance. The applicant is responsible for complying with all laws, ordinances and regulations of all other governmental agencies which may pertain to the above equipment.

Seyed Sadredin, Executive Director / APCO

DRAFT

DAVID WARNER, Director of Permit Services
N-7855-717-0 : Mar 23 2011 1:26PM -- ROBERTSD : Joint Inspection NOT Required

8. Total annual VOC emissions from wine fermentation operations shall be determined by the following formula: Total annual VOC emissions = (Total Annual Red Wine Production-gal) x (6.2 lb-VOC/1000 gal) + (Total Annual White Wine Production-gal) x (2.5 lb-VOC/1000 gal). [District Rule 2201]

9. When used for wine storage, this tank shall be equipped with and operated with a pressure-vacuum relief valve, which shall operate within 10% of the maximum allowable working pressure of the tank, operate in accordance with the manufacturer's instructions, and be permanently labeled with the operating pressure settings. [District Rules 2201 and 4694]

10. When used for wine storage, the pressure-vacuum relief valve and storage tank shall remain in a gas-tight condition, except when the operating pressure of the tank exceeds the valve set pressure. A gas-tight condition shall be determined by measuring the gas leak in accordance with the procedures in EPA Method 21. [District Rules 2201 and 4694]

11. The temperature of the wine stored in this tank shall be maintained at or below 75 degrees Fahrenheit. For each batch of wine, the operator shall achieve the storage temperature of 75 degrees Fahrenheit or less within 60 days after completing fermentation, and shall maintain records to show when the required storage temperature of 75 degrees Fahrenheit or less was achieved. [District Rules 2201 and 4694]

12. The average fermentation temperature of each batch of must fermented in this tank shall not exceed 95 oF, calculated as the average of all temperature measurements for the batch taken at least every 12 hours over the course of the fermentation. [District Rule 2201]

13. A Three-Year Compliance Plan that demonstrates compliance with the requirements of Section 5.1 of District Rule 4694 for each year of the applicable compliance period shall be submitted to the District by no later than December 1, 2012, and every three years thereafter on or before December 1. [District Rule 4694]

14. A Three-Year Compliance Plan Verification that demonstrates that the Three-Year Compliance Plan elements are in effect shall be submitted to the District by no later than July 1, 2013, and every three years thereafter on or before July 1. [District Rule 4694]

15. An Annual Compliance Plan Demonstration that shows compliance with the applicable requirements of this rule shall be submitted to the District by no later than February 1, 2012, and every year thereafter on or before February 1. [District Rule 4694]

16. Operators using CER to mitigate fermentation emissions shall perform all monitoring and recordkeeping, as established in their approved Three-Year Compliance Plan, and shall maintain all records necessary to demonstrate compliance. [District Rule 4694]

17. Operators using District Obtained Emission Reductions (DOER) shall submit payment of DOER and administrative fees to the District no later than March 1, of the first year in the applicable compliance period. [District Rule 4694]

18. For each batch of must fermented in this tank, the operator shall record the fermentation completion date, the total gallons of must fermented, the average fermentation temperature and the uncontrolled fermentation emissions and fermentation emission reductions (calculated per the emission factors given in District Rule 4694). The information shall be recorded by the tank Permit to Operate number and by wine type, stated as either red wine or white wine. [District Rules 2201 and 4694]

19. When used for wine storage, daily throughput records, including records of filling and emptying operations, the dates of such operations, a unique identifier for each batch, the volume percent ethanol in the batch, and the volume of wine transferred, shall be maintained. [District Rules 2201 and 4694]

20. When used for wine storage, the operator shall record, on a weekly basis, the total gallons of wine contained in the tank and the maximum temperature of the stored wine. [District Rule 4694]

21. Records of total annual fermentation and total annual storage emissions, including calculation methods and parameters used, shall be maintained. [District Rule 1070 and 2201]

22. Separate annual records of total red wine and total white wine produced by fermentation at this facility, based on values reported to the Alcohol and Tobacco Tax and Trade Bureau (TTB), U.S. Department of the Treasury, shall be maintained. [District Rule 1070 and 2201]

DRAFT

CONDITIONS CONTINUE ON NEXT PAGE

23. All records shall be retained on-site for a period of at least five years and made available for District inspection upon request. [District Rules 2201 and 4694]

DRAFT

San Joaquin Valley
Air Pollution Control District

AUTHORITY TO CONSTRUCT

DRAFT

PERMIT NO: N-7855-718-0 **ISSUANCE DATE:** DRAFT

LEGAL OWNER OR OPERATOR: SUTTER HOME WINERY
MAILING ADDRESS: P O BOX 248
ST HELENA, CA 94574-0248

LOCATION: 18667 N JACOB BRACK RD
LODI, CA 95242

EQUIPMENT DESCRIPTION:
202,638 GALLON WHITE WINE FERMENTATION TANK AND WINE STORAGE TANK (TANK 1217) WITH PRESSURE/VACUUM VALVE AND INSULATION

CONDITIONS

1. {98} No air contaminant shall be released into the atmosphere which causes a public nuisance. [District Rule 4102]
2. The VOC emissions rate for fermentation operations in this tank shall not exceed 1.62 lb/day per 1000 gallons of tank capacity. [District Rule 2201]
3. The ethanol content of wine stored in this tank shall not exceed 23.9 percent by volume. [District Rule 2201]
4. When this tank is used for wine storage, the daily tank throughput, in gallons, shall not exceed five times the maximum nominal tank capacity stated on the equipment description. [District Rule 2201]
5. Total combined annual VOC emissions from all wine fermentation and wine storage operations at this facility shall not exceed 292,950 lb. [District Rule 2201]
6. Combined annual VOC emissions from all wine storage operations shall be determined as the sum of the emissions for each individual wine movement based on the volume transferred in each wine movement and the batch-specific wine storage emission factor calculated using the equation(s) specified within this permit. [District Rule 2201]
7. The annual VOC wine storage emission factor (EF) for each wine transfer shall be selected from the following emission factors based on the ethanol content of the wine transferred: For wine with ethanol content less than 14 volume percent: EF = 0.198 lb-VOC/1000 gallons; For wine with ethanol content between 14 and 21 volume percent, EF = 0.314 lb-VOC/1000 gallons; For wine with ethanol content greater than 21 volume percent, EF = 0.363 lb-VOC/1000 gallon. [District Rule 2201]

CONDITIONS CONTINUE ON NEXT PAGE

YOU MUST NOTIFY THE DISTRICT COMPLIANCE DIVISION AT (209) 557-6400 WHEN CONSTRUCTION IS COMPLETED AND PRIOR TO OPERATING THE EQUIPMENT OR MODIFICATIONS AUTHORIZED BY THIS AUTHORITY TO CONSTRUCT. This is NOT a PERMIT TO OPERATE. Approval or denial of a PERMIT TO OPERATE will be made after an inspection to verify that the equipment has been constructed in accordance with the approved plans, specifications and conditions of this Authority to Construct, and to determine if the equipment can be operated in compliance with all Rules and Regulations of the San Joaquin Valley Unified Air Pollution Control District. Unless construction has commenced pursuant to Rule 2050, this Authority to Construct shall expire and application shall be cancelled two years from the date of issuance. The applicant is responsible for complying with all laws, ordinances and regulations of all other governmental agencies which may pertain to the above equipment.

Seyed Sadredin, Executive Director / APCO

DRAFT

DAVID WARNER, Director of Permit Services
N-7855-718-0 : Mar 23 2011 1:26PM -- ROBERTSD : Joint Inspection NOT Required

8. Total annual VOC emissions from wine fermentation operations shall be determined by the following formula: Total annual VOC emissions = (Total Annual Red Wine Production-gal) x (6.2 lb-VOC/1000 gal) + (Total Annual White Wine Production-gal) x (2.5 lb-VOC/1000 gal). [District Rule 2201]

9. When used for wine storage, this tank shall be equipped with and operated with a pressure-vacuum relief valve, which shall operate within 10% of the maximum allowable working pressure of the tank, operate in accordance with the manufacturer's instructions, and be permanently labeled with the operating pressure settings. [District Rules 2201 and 4694]

10. When used for wine storage, the pressure-vacuum relief valve and storage tank shall remain in a gas-tight condition, except when the operating pressure of the tank exceeds the valve set pressure. A gas-tight condition shall be determined by measuring the gas leak in accordance with the procedures in EPA Method 21. [District Rules 2201 and 4694]

11. The temperature of the wine stored in this tank shall be maintained at or below 75 degrees Fahrenheit. For each batch of wine, the operator shall achieve the storage temperature of 75 degrees Fahrenheit or less within 60 days after completing fermentation, and shall maintain records to show when the required storage temperature of 75 degrees Fahrenheit or less was achieved. [District Rules 2201 and 4694]

12. The average fermentation temperature of each batch of must fermented in this tank shall not exceed 95 oF, calculated as the average of all temperature measurements for the batch taken at least every 12 hours over the course of the fermentation. [District Rule 2201]

13. A Three-Year Compliance Plan that demonstrates compliance with the requirements of Section 5.1 of District Rule 4694 for each year of the applicable compliance period shall be submitted to the District by no later than December 1, 2012, and every three years thereafter on or before December 1. [District Rule 4694]

14. A Three-Year Compliance Plan Verification that demonstrates that the Three-Year Compliance Plan elements are in effect shall be submitted to the District by no later than July 1, 2013, and every three years thereafter on or before July 1. [District Rule 4694]

15. An Annual Compliance Plan Demonstration that shows compliance with the applicable requirements of this rule shall be submitted to the District by no later than February 1, 2012, and every year thereafter on or before February 1. [District Rule 4694]

16. Operators using CER to mitigate fermentation emissions shall perform all monitoring and recordkeeping, as established in their approved Three-Year Compliance Plan, and shall maintain all records necessary to demonstrate compliance. [District Rule 4694]

17. Operators using District Obtained Emission Reductions (DOER) shall submit payment of DOER and administrative fees to the District no later than March 1, of the first year in the applicable compliance period. [District Rule 4694]

18. For each batch of must fermented in this tank, the operator shall record the fermentation completion date, the total gallons of must fermented, the average fermentation temperature and the uncontrolled fermentation emissions and fermentation emission reductions (calculated per the emission factors given in District Rule 4694). The information shall be recorded by the tank Permit to Operate number and by wine type, stated as either red wine or white wine. [District Rules 2201 and 4694]

19. When used for wine storage, daily throughput records, including records of filling and emptying operations, the dates of such operations, a unique identifier for each batch, the volume percent ethanol in the batch, and the volume of wine transferred, shall be maintained. [District Rules 2201 and 4694]

20. When used for wine storage, the operator shall record, on a weekly basis, the total gallons of wine contained in the tank and the maximum temperature of the stored wine. [District Rule 4694]

21. Records of total annual fermentation and total annual storage emissions, including calculation methods and parameters used, shall be maintained. [District Rule 1070 and 2201]

22. Separate annual records of total red wine and total white wine produced by fermentation at this facility, based on values reported to the Alcohol and Tobacco Tax and Trade Bureau (TTB), U.S. Department of the Treasury, shall be maintained. [District Rule 1070 and 2201]

DRAFT

CONDITIONS CONTINUE ON NEXT PAGE

23. All records shall be retained on-site for a period of at least five years and made available for District inspection upon request. [District Rules 2201 and 4694]

DRAFT

San Joaquin Valley
Air Pollution Control District

AUTHORITY TO CONSTRUCT

DRAFT

PERMIT NO: N-7855-719-0

ISSUANCE DATE: DRAFT

LEGAL OWNER OR OPERATOR: SUTTER HOME WINERY
MAILING ADDRESS: P O BOX 248
ST HELENA, CA 94574-0248

LOCATION: 18667 N JACOB BRACK RD
LODI, CA 95242

EQUIPMENT DESCRIPTION:
202,638 GALLON WHITE WINE FERMENTATION TANK AND WINE STORAGE TANK (TANK 1218) WITH PRESSURE/VACUUM VALVE AND INSULATION

CONDITIONS

1. {98} No air contaminant shall be released into the atmosphere which causes a public nuisance. [District Rule 4102]
2. The VOC emissions rate for fermentation operations in this tank shall not exceed 1.62 lb/day per 1000 gallons of tank capacity. [District Rule 2201]
3. The ethanol content of wine stored in this tank shall not exceed 23.9 percent by volume. [District Rule 2201]
4. When this tank is used for wine storage, the daily tank throughput, in gallons, shall not exceed five times the maximum nominal tank capacity stated on the equipment description. [District Rule 2201]
5. Total combined annual VOC emissions from all wine fermentation and wine storage operations at this facility shall not exceed 292,950 lb. [District Rule 2201]
6. Combined annual VOC emissions from all wine storage operations shall be determined as the sum of the emissions for each individual wine movement based on the volume transferred in each wine movement and the batch-specific wine storage emission factor calculated using the equation(s) specified within this permit. [District Rule 2201]
7. The annual VOC wine storage emission factor (EF) for each wine transfer shall be selected from the following emission factors based on the ethanol content of the wine transferred: For wine with ethanol content less than 14 volume percent: EF = 0.198 lb-VOC/1000 gallons; For wine with ethanol content between 14 and 21 volume percent, EF = 0.314 lb-VOC/1000 gallons; For wine with ethanol content greater than 21 volume percent, EF = 0.363 lb-VOC/1000 gallon. [District Rule 2201]

CONDITIONS CONTINUE ON NEXT PAGE

YOU MUST NOTIFY THE DISTRICT COMPLIANCE DIVISION AT (209) 557-6400 WHEN CONSTRUCTION IS COMPLETED AND PRIOR TO OPERATING THE EQUIPMENT OR MODIFICATIONS AUTHORIZED BY THIS AUTHORITY TO CONSTRUCT. This is NOT a PERMIT TO OPERATE. Approval or denial of a PERMIT TO OPERATE will be made after an inspection to verify that the equipment has been constructed in accordance with the approved plans, specifications and conditions of this Authority to Construct, and to determine if the equipment can be operated in compliance with all Rules and Regulations of the San Joaquin Valley Unified Air Pollution Control District. Unless construction has commenced pursuant to Rule 2050, this Authority to Construct shall expire and application shall be cancelled two years from the date of issuance. The applicant is responsible for complying with all laws, ordinances and regulations of all other governmental agencies which may pertain to the above equipment.

Seyed Sadredin, Executive Director / APCO

DRAFT

DAVID WARNER, Director of Permit Services
N-7855-719-0 : Mar 23 2011 1:26PM -- ROBERTSD : Joint Inspection NOT Required

8. Total annual VOC emissions from wine fermentation operations shall be determined by the following formula: Total annual VOC emissions = (Total Annual Red Wine Production-gal) x (6.2 lb-VOC/1000 gal) + (Total Annual White Wine Production-gal) x (2.5 lb-VOC/1000 gal). [District Rule 2201]
9. When used for wine storage, this tank shall be equipped with and operated with a pressure-vacuum relief valve, which shall operate within 10% of the maximum allowable working pressure of the tank, operate in accordance with the manufacturer's instructions, and be permanently labeled with the operating pressure settings. [District Rules 2201 and 4694]
10. When used for wine storage, the pressure-vacuum relief valve and storage tank shall remain in a gas-tight condition, except when the operating pressure of the tank exceeds the valve set pressure. A gas-tight condition shall be determined by measuring the gas leak in accordance with the procedures in EPA Method 21. [District Rules 2201 and 4694]
11. The temperature of the wine stored in this tank shall be maintained at or below 75 degrees Fahrenheit. For each batch of wine, the operator shall achieve the storage temperature of 75 degrees Fahrenheit or less within 60 days after completing fermentation, and shall maintain records to show when the required storage temperature of 75 degrees Fahrenheit or less was achieved. [District Rules 2201 and 4694]
12. The average fermentation temperature of each batch of must fermented in this tank shall not exceed 95 oF, calculated as the average of all temperature measurements for the batch taken at least every 12 hours over the course of the fermentation. [District Rule 2201]
13. A Three-Year Compliance Plan that demonstrates compliance with the requirements of Section 5.1 of District Rule 4694 for each year of the applicable compliance period shall be submitted to the District by no later than December 1, 2012, and every three years thereafter on or before December 1. [District Rule 4694]
14. A Three-Year Compliance Plan Verification that demonstrates that the Three-Year Compliance Plan elements are in effect shall be submitted to the District by no later than July 1, 2013, and every three years thereafter on or before July 1. [District Rule 4694]
15. An Annual Compliance Plan Demonstration that shows compliance with the applicable requirements of this rule shall be submitted to the District by no later than February 1, 2012, and every year thereafter on or before February 1. [District Rule 4694]
16. Operators using CER to mitigate fermentation emissions shall perform all monitoring and recordkeeping, as established in their approved Three-Year Compliance Plan, and shall maintain all records necessary to demonstrate compliance. [District Rule 4694]
17. Operators using District Obtained Emission Reductions (DOER) shall submit payment of DOER and administrative fees to the District no later than March 1, of the first year in the applicable compliance period. [District Rule 4694]
18. For each batch of must fermented in this tank, the operator shall record the fermentation completion date, the total gallons of must fermented, the average fermentation temperature and the uncontrolled fermentation emissions and fermentation emission reductions (calculated per the emission factors given in District Rule 4694). The information shall be recorded by the tank Permit to Operate number and by wine type, stated as either red wine or white wine. [District Rules 2201 and 4694]
19. When used for wine storage, daily throughput records, including records of filling and emptying operations, the dates of such operations, a unique identifier for each batch, the volume percent ethanol in the batch, and the volume of wine transferred, shall be maintained. [District Rules 2201 and 4694]
20. When used for wine storage, the operator shall record, on a weekly basis, the total gallons of wine contained in the tank and the maximum temperature of the stored wine. [District Rule 4694]
21. Records of total annual fermentation and total annual storage emissions, including calculation methods and parameters used, shall be maintained. [District Rule 1070 and 2201]
22. Separate annual records of total red wine and total white wine produced by fermentation at this facility, based on values reported to the Alcohol and Tobacco Tax and Trade Bureau (TTB), U.S. Department of the Treasury, shall be maintained. [District Rule 1070 and 2201]

DRAFT

CONDITIONS CONTINUE ON NEXT PAGE

23. All records shall be retained on-site for a period of at least five years and made available for District inspection upon request. [District Rules 2201 and 4694]

DRAFT

San Joaquin Valley
Air Pollution Control District

AUTHORITY TO CONSTRUCT

DRAFT

PERMIT NO: N-7855-720-0 **ISSUANCE DATE:** DRAFT

LEGAL OWNER OR OPERATOR: SUTTER HOME WINERY
MAILING ADDRESS: P O BOX 248
ST HELENA, CA 94574-0248

LOCATION: 18667 N JACOB BRACK RD
LODI, CA 95242

EQUIPMENT DESCRIPTION:
202,000 GALLON WHITE WINE FERMENTATION TANK AND WINE STORAGE TANK (TANK 1400) WITH PRESSURE/VACUUM VALVE AND INSULATION

CONDITIONS

1. {98} No air contaminant shall be released into the atmosphere which causes a public nuisance. [District Rule 4102]
2. The VOC emissions rate for fermentation operations in this tank shall not exceed 1.62 lb/day per 1000 gallons of tank capacity. [District Rule 2201]
3. The ethanol content of wine stored in this tank shall not exceed 23.9 percent by volume. [District Rule 2201]
4. When this tank is used for wine storage, the daily tank throughput, in gallons, shall not exceed five times the maximum nominal tank capacity stated on the equipment description. [District Rule 2201]
5. Total combined annual VOC emissions from all wine fermentation and wine storage operations at this facility shall not exceed 292,950 lb. [District Rule 2201]
6. Combined annual VOC emissions from all wine storage operations shall be determined as the sum of the emissions for each individual wine movement based on the volume transferred in each wine movement and the batch-specific wine storage emission factor calculated using the equation(s) specified within this permit. [District Rule 2201]
7. The annual VOC wine storage emission factor (EF) for each wine transfer shall be selected from the following emission factors based on the ethanol content of the wine transferred: For wine with ethanol content less than 14 volume percent: EF = 0.198 lb-VOC/1000 gallons; For wine with ethanol content between 14 and 21 volume percent, EF = 0.314 lb-VOC/1000 gallons; For wine with ethanol content greater than 21 volume percent, EF = 0.363 lb-VOC/1000 gallon. [District Rule 2201]

CONDITIONS CONTINUE ON NEXT PAGE

YOU MUST NOTIFY THE DISTRICT COMPLIANCE DIVISION AT (209) 557-6400 WHEN CONSTRUCTION IS COMPLETED AND PRIOR TO OPERATING THE EQUIPMENT OR MODIFICATIONS AUTHORIZED BY THIS AUTHORITY TO CONSTRUCT. This is NOT a PERMIT TO OPERATE. Approval or denial of a PERMIT TO OPERATE will be made after an inspection to verify that the equipment has been constructed in accordance with the approved plans, specifications and conditions of this Authority to Construct, and to determine if the equipment can be operated in compliance with all Rules and Regulations of the San Joaquin Valley Unified Air Pollution Control District. Unless construction has commenced pursuant to Rule 2050, this Authority to Construct shall expire and application shall be cancelled two years from the date of issuance. The applicant is responsible for complying with all laws, ordinances and regulations of all other governmental agencies which may pertain to the above equipment.

Seyed Sadredin, Executive Director / APCO

DRAFT

DAVID WARNER, Director of Permit Services
N-7855-720-0 : Mar 23 2011 1:26PM -- ROBERTSD : Joint Inspection NOT Required

8. Total annual VOC emissions from wine fermentation operations shall be determined by the following formula: Total annual VOC emissions = (Total Annual Red Wine Production-gal) x (6.2 lb-VOC/1000 gal) + (Total Annual White Wine Production-gal) x (2.5 lb-VOC/1000 gal). [District Rule 2201]

9. When used for wine storage, this tank shall be equipped with and operated with a pressure-vacuum relief valve, which shall operate within 10% of the maximum allowable working pressure of the tank, operate in accordance with the manufacturer's instructions, and be permanently labeled with the operating pressure settings. [District Rules 2201 and 4694]

10. When used for wine storage, the pressure-vacuum relief valve and storage tank shall remain in a gas-tight condition, except when the operating pressure of the tank exceeds the valve set pressure. A gas-tight condition shall be determined by measuring the gas leak in accordance with the procedures in EPA Method 21. [District Rules 2201 and 4694]

11. The temperature of the wine stored in this tank shall be maintained at or below 75 degrees Fahrenheit. For each batch of wine, the operator shall achieve the storage temperature of 75 degrees Fahrenheit or less within 60 days after completing fermentation, and shall maintain records to show when the required storage temperature of 75 degrees Fahrenheit or less was achieved. [District Rules 2201 and 4694]

12. The average fermentation temperature of each batch of must fermented in this tank shall not exceed 95 oF, calculated as the average of all temperature measurements for the batch taken at least every 12 hours over the course of the fermentation. [District Rule 2201]

13. A Three-Year Compliance Plan that demonstrates compliance with the requirements of Section 5.1 of District Rule 4694 for each year of the applicable compliance period shall be submitted to the District by no later than December 1, 2012, and every three years thereafter on or before December 1. [District Rule 4694]

14. A Three-Year Compliance Plan Verification that demonstrates that the Three-Year Compliance Plan elements are in effect shall be submitted to the District by no later than July 1, 2013, and every three years thereafter on or before July 1. [District Rule 4694]

15. An Annual Compliance Plan Demonstration that shows compliance with the applicable requirements of this rule shall be submitted to the District by no later than February 1, 2012, and every year thereafter on or before February 1. [District Rule 4694]

16. Operators using CER to mitigate fermentation emissions shall perform all monitoring and recordkeeping, as established in their approved Three-Year Compliance Plan, and shall maintain all records necessary to demonstrate compliance. [District Rule 4694]

17. Operators using District Obtained Emission Reductions (DOER) shall submit payment of DOER and administrative fees to the District no later than March 1, of the first year in the applicable compliance period. [District Rule 4694]

18. For each batch of must fermented in this tank, the operator shall record the fermentation completion date, the total gallons of must fermented, the average fermentation temperature and the uncontrolled fermentation emissions and fermentation emission reductions (calculated per the emission factors given in District Rule 4694). The information shall be recorded by the tank Permit to Operate number and by wine type, stated as either red wine or white wine. [District Rules 2201 and 4694]

19. When used for wine storage, daily throughput records, including records of filling and emptying operations, the dates of such operations, a unique identifier for each batch, the volume percent ethanol in the batch, and the volume of wine transferred, shall be maintained. [District Rules 2201 and 4694]

20. When used for wine storage, the operator shall record, on a weekly basis, the total gallons of wine contained in the tank and the maximum temperature of the stored wine. [District Rule 4694]

21. Records of total annual fermentation and total annual storage emissions, including calculation methods and parameters used, shall be maintained. [District Rule 1070 and 2201]

22. Separate annual records of total red wine and total white wine produced by fermentation at this facility, based on values reported to the Alcohol and Tobacco Tax and Trade Bureau (TTB), U.S. Department of the Treasury, shall be maintained. [District Rule 1070 and 2201]

DRAFT

CONDITIONS CONTINUE ON NEXT PAGE

23. All records shall be retained on-site for a period of at least five years and made available for District inspection upon request. [District Rules 2201 and 4694]

DRAFT

San Joaquin Valley
Air Pollution Control District

AUTHORITY TO CONSTRUCT

DRAFT

PERMIT NO: N-7855-721-0 **ISSUANCE DATE:** DRAFT

LEGAL OWNER OR OPERATOR: SUTTER HOME WINERY
MAILING ADDRESS: P O BOX 248
ST HELENA, CA 94574-0248

LOCATION: 18667 N JACOB BRACK RD
LODI, CA 95242

EQUIPMENT DESCRIPTION:
202,000 GALLON WHITE WINE FERMENTATION TANK AND WINE STORAGE TANK (TANK 1401) WITH PRESSURE/VACUUM VALVE AND INSULATION

CONDITIONS

1. {98} No air contaminant shall be released into the atmosphere which causes a public nuisance. [District Rule 4102]
2. The VOC emissions rate for fermentation operations in this tank shall not exceed 1.62 lb/day per 1000 gallons of tank capacity. [District Rule 2201]
3. The ethanol content of wine stored in this tank shall not exceed 23.9 percent by volume. [District Rule 2201]
4. When this tank is used for wine storage, the daily tank throughput, in gallons, shall not exceed five times the maximum nominal tank capacity stated on the equipment description. [District Rule 2201]
5. Total combined annual VOC emissions from all wine fermentation and wine storage operations at this facility shall not exceed 292,950 lb. [District Rule 2201]
6. Combined annual VOC emissions from all wine storage operations shall be determined as the sum of the emissions for each individual wine movement based on the volume transferred in each wine movement and the batch-specific wine storage emission factor calculated using the equation(s) specified within this permit. [District Rule 2201]
7. The annual VOC wine storage emission factor (EF) for each wine transfer shall be selected from the following emission factors based on the ethanol content of the wine transferred: For wine with ethanol content less than 14 volume percent: EF = 0.198 lb-VOC/1000 gallons; For wine with ethanol content between 14 and 21 volume percent, EF = 0.314 lb-VOC/1000 gallons; For wine with ethanol content greater than 21 volume percent, EF = 0.363 lb-VOC/1000 gallon. [District Rule 2201]

CONDITIONS CONTINUE ON NEXT PAGE

YOU MUST NOTIFY THE DISTRICT COMPLIANCE DIVISION AT (209) 557-6400 WHEN CONSTRUCTION IS COMPLETED AND PRIOR TO OPERATING THE EQUIPMENT OR MODIFICATIONS AUTHORIZED BY THIS AUTHORITY TO CONSTRUCT. This is NOT a PERMIT TO OPERATE. Approval or denial of a PERMIT TO OPERATE will be made after an inspection to verify that the equipment has been constructed in accordance with the approved plans, specifications and conditions of this Authority to Construct, and to determine if the equipment can be operated in compliance with all Rules and Regulations of the San Joaquin Valley Unified Air Pollution Control District. Unless construction has commenced pursuant to Rule 2050, this Authority to Construct shall expire and application shall be cancelled two years from the date of issuance. The applicant is responsible for complying with all laws, ordinances and regulations of all other governmental agencies which may pertain to the above equipment.

Seyed Sadredin, Executive Director / APCO

DRAFT

DAVID WARNER, Director of Permit Services
N-7855-721-0 : Mar 23 2011 1:26PM -- ROBERTSD : Joint Inspection NOT Required

8. Total annual VOC emissions from wine fermentation operations shall be determined by the following formula: Total annual VOC emissions = (Total Annual Red Wine Production-gal) x (6.2 lb-VOC/1000 gal) + (Total Annual White Wine Production-gal) x (2.5 lb-VOC/1000 gal). [District Rule 2201]
9. When used for wine storage, this tank shall be equipped with and operated with a pressure-vacuum relief valve, which shall operate within 10% of the maximum allowable working pressure of the tank, operate in accordance with the manufacturer's instructions, and be permanently labeled with the operating pressure settings. [District Rules 2201 and 4694]
10. When used for wine storage, the pressure-vacuum relief valve and storage tank shall remain in a gas-tight condition, except when the operating pressure of the tank exceeds the valve set pressure. A gas-tight condition shall be determined by measuring the gas leak in accordance with the procedures in EPA Method 21. [District Rules 2201 and 4694]
11. The temperature of the wine stored in this tank shall be maintained at or below 75 degrees Fahrenheit. For each batch of wine, the operator shall achieve the storage temperature of 75 degrees Fahrenheit or less within 60 days after completing fermentation, and shall maintain records to show when the required storage temperature of 75 degrees Fahrenheit or less was achieved. [District Rules 2201 and 4694]
12. The average fermentation temperature of each batch of must fermented in this tank shall not exceed 95 oF, calculated as the average of all temperature measurements for the batch taken at least every 12 hours over the course of the fermentation. [District Rule 2201]
13. A Three-Year Compliance Plan that demonstrates compliance with the requirements of Section 5.1 of District Rule 4694 for each year of the applicable compliance period shall be submitted to the District by no later than December 1, 2012, and every three years thereafter on or before December 1. [District Rule 4694]
14. A Three-Year Compliance Plan Verification that demonstrates that the Three-Year Compliance Plan elements are in effect shall be submitted to the District by no later than July 1, 2013, and every three years thereafter on or before July 1. [District Rule 4694]
15. An Annual Compliance Plan Demonstration that shows compliance with the applicable requirements of this rule shall be submitted to the District by no later than February 1, 2012, and every year thereafter on or before February 1. [District Rule 4694]
16. Operators using CER to mitigate fermentation emissions shall perform all monitoring and recordkeeping, as established in their approved Three-Year Compliance Plan, and shall maintain all records necessary to demonstrate compliance. [District Rule 4694]
17. Operators using District Obtained Emission Reductions (DOER) shall submit payment of DOER and administrative fees to the District no later than March 1, of the first year in the applicable compliance period. [District Rule 4694]
18. For each batch of must fermented in this tank, the operator shall record the fermentation completion date, the total gallons of must fermented, the average fermentation temperature and the uncontrolled fermentation emissions and fermentation emission reductions (calculated per the emission factors given in District Rule 4694). The information shall be recorded by the tank Permit to Operate number and by wine type, stated as either red wine or white wine. [District Rules 2201 and 4694]
19. When used for wine storage, daily throughput records, including records of filling and emptying operations, the dates of such operations, a unique identifier for each batch, the volume percent ethanol in the batch, and the volume of wine transferred, shall be maintained. [District Rules 2201 and 4694]
20. When used for wine storage, the operator shall record, on a weekly basis, the total gallons of wine contained in the tank and the maximum temperature of the stored wine. [District Rule 4694]
21. Records of total annual fermentation and total annual storage emissions, including calculation methods and parameters used, shall be maintained. [District Rule 1070 and 2201]
22. Separate annual records of total red wine and total white wine produced by fermentation at this facility, based on values reported to the Alcohol and Tobacco Tax and Trade Bureau (TTB), U.S. Department of the Treasury, shall be maintained. [District Rule 1070 and 2201]

DRAFT

CONDITIONS CONTINUE ON NEXT PAGE

23. All records shall be retained on-site for a period of at least five years and made available for District inspection upon request. [District Rules 2201 and 4694]

DRAFT

San Joaquin Valley
Air Pollution Control District

AUTHORITY TO CONSTRUCT

DRAFT

PERMIT NO: N-7855-722-0 **ISSUANCE DATE:** DRAFT

LEGAL OWNER OR OPERATOR: SUTTER HOME WINERY
MAILING ADDRESS: P O BOX 248
ST HELENA, CA 94574-0248

LOCATION: 18667 N JACOB BRACK RD
LODI, CA 95242

EQUIPMENT DESCRIPTION:
202,000 GALLON WHITE WINE FERMENTATION TANK AND WINE STORAGE TANK (TANK 1402) WITH PRESSURE/VACUUM VALVE AND INSULATION

CONDITIONS

1. {98} No air contaminant shall be released into the atmosphere which causes a public nuisance. [District Rule 4102]
2. The VOC emissions rate for fermentation operations in this tank shall not exceed 1.62 lb/day per 1000 gallons of tank capacity. [District Rule 2201]
3. The ethanol content of wine stored in this tank shall not exceed 23.9 percent by volume. [District Rule 2201]
4. When this tank is used for wine storage, the daily tank throughput, in gallons, shall not exceed five times the maximum nominal tank capacity stated on the equipment description. [District Rule 2201]
5. Total combined annual VOC emissions from all wine fermentation and wine storage operations at this facility shall not exceed 292,950 lb. [District Rule 2201]
6. Combined annual VOC emissions from all wine storage operations shall be determined as the sum of the emissions for each individual wine movement based on the volume transferred in each wine movement and the batch-specific wine storage emission factor calculated using the equation(s) specified within this permit. [District Rule 2201]
7. The annual VOC wine storage emission factor (EF) for each wine transfer shall be selected from the following emission factors based on the ethanol content of the wine transferred: For wine with ethanol content less than 14 volume percent: EF = 0.198 lb-VOC/1000 gallons; For wine with ethanol content between 14 and 21 volume percent, EF = 0.314 lb-VOC/1000 gallons; For wine with ethanol content greater than 21 volume percent, EF = 0.363 lb-VOC/1000 gallon. [District Rule 2201]

CONDITIONS CONTINUE ON NEXT PAGE

YOU MUST NOTIFY THE DISTRICT COMPLIANCE DIVISION AT (209) 557-6400 WHEN CONSTRUCTION IS COMPLETED AND PRIOR TO OPERATING THE EQUIPMENT OR MODIFICATIONS AUTHORIZED BY THIS AUTHORITY TO CONSTRUCT. This is NOT a PERMIT TO OPERATE. Approval or denial of a PERMIT TO OPERATE will be made after an inspection to verify that the equipment has been constructed in accordance with the approved plans, specifications and conditions of this Authority to Construct, and to determine if the equipment can be operated in compliance with all Rules and Regulations of the San Joaquin Valley Unified Air Pollution Control District. Unless construction has commenced pursuant to Rule 2050, this Authority to Construct shall expire and application shall be cancelled two years from the date of issuance. The applicant is responsible for complying with all laws, ordinances and regulations of all other governmental agencies which may pertain to the above equipment.

Seyed Sadredin, Executive Director / APCO

DRAFT

DAVID WARNER, Director of Permit Services
N-7855-722-0 : Mar 23 2011 1:26PM -- ROBERTSD : Joint Inspection NOT Required

8. Total annual VOC emissions from wine fermentation operations shall be determined by the following formula: Total annual VOC emissions = (Total Annual Red Wine Production-gal) x (6.2 lb-VOC/1000 gal) + (Total Annual White Wine Production-gal) x (2.5 lb-VOC/1000 gal). [District Rule 2201]
9. When used for wine storage, this tank shall be equipped with and operated with a pressure-vacuum relief valve, which shall operate within 10% of the maximum allowable working pressure of the tank, operate in accordance with the manufacturer's instructions, and be permanently labeled with the operating pressure settings. [District Rules 2201 and 4694]
10. When used for wine storage, the pressure-vacuum relief valve and storage tank shall remain in a gas-tight condition, except when the operating pressure of the tank exceeds the valve set pressure. A gas-tight condition shall be determined by measuring the gas leak in accordance with the procedures in EPA Method 21. [District Rules 2201 and 4694]
11. The temperature of the wine stored in this tank shall be maintained at or below 75 degrees Fahrenheit. For each batch of wine, the operator shall achieve the storage temperature of 75 degrees Fahrenheit or less within 60 days after completing fermentation, and shall maintain records to show when the required storage temperature of 75 degrees Fahrenheit or less was achieved. [District Rules 2201 and 4694]
12. The average fermentation temperature of each batch of must fermented in this tank shall not exceed 95 oF, calculated as the average of all temperature measurements for the batch taken at least every 12 hours over the course of the fermentation. [District Rule 2201]
13. A Three-Year Compliance Plan that demonstrates compliance with the requirements of Section 5.1 of District Rule 4694 for each year of the applicable compliance period shall be submitted to the District by no later than December 1, 2012, and every three years thereafter on or before December 1. [District Rule 4694]
14. A Three-Year Compliance Plan Verification that demonstrates that the Three-Year Compliance Plan elements are in effect shall be submitted to the District by no later than July 1, 2013, and every three years thereafter on or before July 1. [District Rule 4694]
15. An Annual Compliance Plan Demonstration that shows compliance with the applicable requirements of this rule shall be submitted to the District by no later than February 1, 2012, and every year thereafter on or before February 1. [District Rule 4694]
16. Operators using CER to mitigate fermentation emissions shall perform all monitoring and recordkeeping, as established in their approved Three-Year Compliance Plan, and shall maintain all records necessary to demonstrate compliance. [District Rule 4694]
17. Operators using District Obtained Emission Reductions (DOER) shall submit payment of DOER and administrative fees to the District no later than March 1, of the first year in the applicable compliance period. [District Rule 4694]
18. For each batch of must fermented in this tank, the operator shall record the fermentation completion date, the total gallons of must fermented, the average fermentation temperature and the uncontrolled fermentation emissions and fermentation emission reductions (calculated per the emission factors given in District Rule 4694). The information shall be recorded by the tank Permit to Operate number and by wine type, stated as either red wine or white wine. [District Rules 2201 and 4694]
19. When used for wine storage, daily throughput records, including records of filling and emptying operations, the dates of such operations, a unique identifier for each batch, the volume percent ethanol in the batch, and the volume of wine transferred, shall be maintained. [District Rules 2201 and 4694]
20. When used for wine storage, the operator shall record, on a weekly basis, the total gallons of wine contained in the tank and the maximum temperature of the stored wine. [District Rule 4694]
21. Records of total annual fermentation and total annual storage emissions, including calculation methods and parameters used, shall be maintained. [District Rule 1070 and 2201]
22. Separate annual records of total red wine and total white wine produced by fermentation at this facility, based on values reported to the Alcohol and Tobacco Tax and Trade Bureau (TTB), U.S. Department of the Treasury, shall be maintained. [District Rule 1070 and 2201]

DRAFT

CONDITIONS CONTINUE ON NEXT PAGE

23. All records shall be retained on-site for a period of at least five years and made available for District inspection upon request. [District Rules 2201 and 4694]

DRAFT

San Joaquin Valley
Air Pollution Control District

AUTHORITY TO CONSTRUCT

DRAFT

PERMIT NO: N-7855-723-0 **ISSUANCE DATE:** DRAFT

LEGAL OWNER OR OPERATOR: SUTTER HOME WINERY
MAILING ADDRESS: P O BOX 248
ST HELENA, CA 94574-0248

LOCATION: 18667 N JACOB BRACK RD
LODI, CA 95242

EQUIPMENT DESCRIPTION:
202,000 GALLON WHITE WINE FERMENTATION TANK AND WINE STORAGE TANK (TANK 1403) WITH PRESSURE/VACUUM VALVE AND INSULATION

CONDITIONS

1. {98} No air contaminant shall be released into the atmosphere which causes a public nuisance. [District Rule 4102]
2. The VOC emissions rate for fermentation operations in this tank shall not exceed 1.62 lb/day per 1000 gallons of tank capacity. [District Rule 2201]
3. The ethanol content of wine stored in this tank shall not exceed 23.9 percent by volume. [District Rule 2201]
4. When this tank is used for wine storage, the daily tank throughput, in gallons, shall not exceed five times the maximum nominal tank capacity stated on the equipment description. [District Rule 2201]
5. Total combined annual VOC emissions from all wine fermentation and wine storage operations at this facility shall not exceed 292,950 lb. [District Rule 2201]
6. Combined annual VOC emissions from all wine storage operations shall be determined as the sum of the emissions for each individual wine movement based on the volume transferred in each wine movement and the batch-specific wine storage emission factor calculated using the equation(s) specified within this permit. [District Rule 2201]
7. The annual VOC wine storage emission factor (EF) for each wine transfer shall be selected from the following emission factors based on the ethanol content of the wine transferred: For wine with ethanol content less than 14 volume percent: EF = 0.198 lb-VOC/1000 gallons; For wine with ethanol content between 14 and 21 volume percent, EF = 0.314 lb-VOC/1000 gallons; For wine with ethanol content greater than 21 volume percent, EF = 0.363 lb-VOC/1000 gallon. [District Rule 2201]

CONDITIONS CONTINUE ON NEXT PAGE

YOU MUST NOTIFY THE DISTRICT COMPLIANCE DIVISION AT (209) 557-6400 WHEN CONSTRUCTION IS COMPLETED AND PRIOR TO OPERATING THE EQUIPMENT OR MODIFICATIONS AUTHORIZED BY THIS AUTHORITY TO CONSTRUCT. This is NOT a PERMIT TO OPERATE. Approval or denial of a PERMIT TO OPERATE will be made after an inspection to verify that the equipment has been constructed in accordance with the approved plans, specifications and conditions of this Authority to Construct, and to determine if the equipment can be operated in compliance with all Rules and Regulations of the San Joaquin Valley Unified Air Pollution Control District. Unless construction has commenced pursuant to Rule 2050, this Authority to Construct shall expire and application shall be cancelled two years from the date of issuance. The applicant is responsible for complying with all laws, ordinances and regulations of all other governmental agencies which may pertain to the above equipment.

Seyed Sadredin, Executive Director / APCO

DRAFT

DAVID WARNER, Director of Permit Services
N-7855-723-0 : Mar 23 2011 1:26PM -- ROBERTSD : Joint Inspection NOT Required

8. Total annual VOC emissions from wine fermentation operations shall be determined by the following formula: Total annual VOC emissions = (Total Annual Red Wine Production-gal) x (6.2 lb-VOC/1000 gal) + (Total Annual White Wine Production-gal) x (2.5 lb-VOC/1000 gal). [District Rule 2201]
9. When used for wine storage, this tank shall be equipped with and operated with a pressure-vacuum relief valve, which shall operate within 10% of the maximum allowable working pressure of the tank, operate in accordance with the manufacturer's instructions, and be permanently labeled with the operating pressure settings. [District Rules 2201 and 4694]
10. When used for wine storage, the pressure-vacuum relief valve and storage tank shall remain in a gas-tight condition, except when the operating pressure of the tank exceeds the valve set pressure. A gas-tight condition shall be determined by measuring the gas leak in accordance with the procedures in EPA Method 21. [District Rules 2201 and 4694]
11. The temperature of the wine stored in this tank shall be maintained at or below 75 degrees Fahrenheit. For each batch of wine, the operator shall achieve the storage temperature of 75 degrees Fahrenheit or less within 60 days after completing fermentation, and shall maintain records to show when the required storage temperature of 75 degrees Fahrenheit or less was achieved. [District Rules 2201 and 4694]
12. The average fermentation temperature of each batch of must fermented in this tank shall not exceed 95 oF, calculated as the average of all temperature measurements for the batch taken at least every 12 hours over the course of the fermentation. [District Rule 2201]
13. A Three-Year Compliance Plan that demonstrates compliance with the requirements of Section 5.1 of District Rule 4694 for each year of the applicable compliance period shall be submitted to the District by no later than December 1, 2012, and every three years thereafter on or before December 1. [District Rule 4694]
14. A Three-Year Compliance Plan Verification that demonstrates that the Three-Year Compliance Plan elements are in effect shall be submitted to the District by no later than July 1, 2013, and every three years thereafter on or before July 1. [District Rule 4694]
15. An Annual Compliance Plan Demonstration that shows compliance with the applicable requirements of this rule shall be submitted to the District by no later than February 1, 2012, and every year thereafter on or before February 1. [District Rule 4694]
16. Operators using CER to mitigate fermentation emissions shall perform all monitoring and recordkeeping, as established in their approved Three-Year Compliance Plan, and shall maintain all records necessary to demonstrate compliance. [District Rule 4694]
17. Operators using District Obtained Emission Reductions (DOER) shall submit payment of DOER and administrative fees to the District no later than March 1, of the first year in the applicable compliance period. [District Rule 4694]
18. For each batch of must fermented in this tank, the operator shall record the fermentation completion date, the total gallons of must fermented, the average fermentation temperature and the uncontrolled fermentation emissions and fermentation emission reductions (calculated per the emission factors given in District Rule 4694). The information shall be recorded by the tank Permit to Operate number and by wine type, stated as either red wine or white wine. [District Rules 2201 and 4694]
19. When used for wine storage, daily throughput records, including records of filling and emptying operations, the dates of such operations, a unique identifier for each batch, the volume percent ethanol in the batch, and the volume of wine transferred, shall be maintained. [District Rules 2201 and 4694]
20. When used for wine storage, the operator shall record, on a weekly basis, the total gallons of wine contained in the tank and the maximum temperature of the stored wine. [District Rule 4694]
21. Records of total annual fermentation and total annual storage emissions, including calculation methods and parameters used, shall be maintained. [District Rule 1070 and 2201]
22. Separate annual records of total red wine and total white wine produced by fermentation at this facility, based on values reported to the Alcohol and Tobacco Tax and Trade Bureau (TTB), U.S. Department of the Treasury, shall be maintained. [District Rule 1070 and 2201]

DRAFT

CONDITIONS CONTINUE ON NEXT PAGE

23. All records shall be retained on-site for a period of at least five years and made available for District inspection upon request. [District Rules 2201 and 4694]

DRAFT

San Joaquin Valley
Air Pollution Control District

AUTHORITY TO CONSTRUCT

DRAFT

PERMIT NO: N-7855-724-0 **ISSUANCE DATE:** DRAFT

LEGAL OWNER OR OPERATOR: SUTTER HOME WINERY
MAILING ADDRESS: P O BOX 248
ST HELENA, CA 94574-0248

LOCATION: 18667 N JACOB BRACK RD
LODI, CA 95242

EQUIPMENT DESCRIPTION:
202,000 GALLON WHITE WINE FERMENTATION TANK AND WINE STORAGE TANK (TANK 1404) WITH PRESSURE/VACUUM VALVE AND INSULATION

CONDITIONS

1. {98} No air contaminant shall be released into the atmosphere which causes a public nuisance. [District Rule 4102]
2. The VOC emissions rate for fermentation operations in this tank shall not exceed 1.62 lb/day per 1000 gallons of tank capacity. [District Rule 2201]
3. The ethanol content of wine stored in this tank shall not exceed 23.9 percent by volume. [District Rule 2201]
4. When this tank is used for wine storage, the daily tank throughput, in gallons, shall not exceed five times the maximum nominal tank capacity stated on the equipment description. [District Rule 2201]
5. Total combined annual VOC emissions from all wine fermentation and wine storage operations at this facility shall not exceed 292,950 lb. [District Rule 2201]
6. Combined annual VOC emissions from all wine storage operations shall be determined as the sum of the emissions for each individual wine movement based on the volume transferred in each wine movement and the batch-specific wine storage emission factor calculated using the equation(s) specified within this permit. [District Rule 2201]
7. The annual VOC wine storage emission factor (EF) for each wine transfer shall be selected from the following emission factors based on the ethanol content of the wine transferred: For wine with ethanol content less than 14 volume percent: EF = 0.198 lb-VOC/1000 gallons; For wine with ethanol content between 14 and 21 volume percent, EF = 0.314 lb-VOC/1000 gallons; For wine with ethanol content greater than 21 volume percent, EF = 0.363 lb-VOC/1000 gallon. [District Rule 2201]

CONDITIONS CONTINUE ON NEXT PAGE

YOU MUST NOTIFY THE DISTRICT COMPLIANCE DIVISION AT (209) 557-6400 WHEN CONSTRUCTION IS COMPLETED AND PRIOR TO OPERATING THE EQUIPMENT OR MODIFICATIONS AUTHORIZED BY THIS AUTHORITY TO CONSTRUCT. This is NOT a PERMIT TO OPERATE. Approval or denial of a PERMIT TO OPERATE will be made after an inspection to verify that the equipment has been constructed in accordance with the approved plans, specifications and conditions of this Authority to Construct, and to determine if the equipment can be operated in compliance with all Rules and Regulations of the San Joaquin Valley Unified Air Pollution Control District. Unless construction has commenced pursuant to Rule 2050, this Authority to Construct shall expire and application shall be cancelled two years from the date of issuance. The applicant is responsible for complying with all laws, ordinances and regulations of all other governmental agencies which may pertain to the above equipment.

Seyed Sadredin, Executive Director / APCO

DRAFT

DAVID WARNER, Director of Permit Services
N-7855-724-0 : Mar 23 2011 1:26PM -- ROBERTSD : Joint Inspection NOT Required

8. Total annual VOC emissions from wine fermentation operations shall be determined by the following formula: Total annual VOC emissions = (Total Annual Red Wine Production-gal) x (6.2 lb-VOC/1000 gal) + (Total Annual White Wine Production-gal) x (2.5 lb-VOC/1000 gal). [District Rule 2201]

9. When used for wine storage, this tank shall be equipped with and operated with a pressure-vacuum relief valve, which shall operate within 10% of the maximum allowable working pressure of the tank, operate in accordance with the manufacturer's instructions, and be permanently labeled with the operating pressure settings. [District Rules 2201 and 4694]

10. When used for wine storage, the pressure-vacuum relief valve and storage tank shall remain in a gas-tight condition, except when the operating pressure of the tank exceeds the valve set pressure. A gas-tight condition shall be determined by measuring the gas leak in accordance with the procedures in EPA Method 21. [District Rules 2201 and 4694]

11. The temperature of the wine stored in this tank shall be maintained at or below 75 degrees Fahrenheit. For each batch of wine, the operator shall achieve the storage temperature of 75 degrees Fahrenheit or less within 60 days after completing fermentation, and shall maintain records to show when the required storage temperature of 75 degrees Fahrenheit or less was achieved. [District Rules 2201 and 4694]

12. The average fermentation temperature of each batch of must fermented in this tank shall not exceed 95 oF, calculated as the average of all temperature measurements for the batch taken at least every 12 hours over the course of the fermentation. [District Rule 2201]

13. A Three-Year Compliance Plan that demonstrates compliance with the requirements of Section 5.1 of District Rule 4694 for each year of the applicable compliance period shall be submitted to the District by no later than December 1, 2012, and every three years thereafter on or before December 1. [District Rule 4694]

14. A Three-Year Compliance Plan Verification that demonstrates that the Three-Year Compliance Plan elements are in effect shall be submitted to the District by no later than July 1, 2013, and every three years thereafter on or before July 1. [District Rule 4694]

15. An Annual Compliance Plan Demonstration that shows compliance with the applicable requirements of this rule shall be submitted to the District by no later than February 1, 2012, and every year thereafter on or before February 1. [District Rule 4694]

16. Operators using CER to mitigate fermentation emissions shall perform all monitoring and recordkeeping, as established in their approved Three-Year Compliance Plan, and shall maintain all records necessary to demonstrate compliance. [District Rule 4694]

17. Operators using District Obtained Emission Reductions (DOER) shall submit payment of DOER and administrative fees to the District no later than March 1, of the first year in the applicable compliance period. [District Rule 4694]

18. For each batch of must fermented in this tank, the operator shall record the fermentation completion date, the total gallons of must fermented, the average fermentation temperature and the uncontrolled fermentation emissions and fermentation emission reductions (calculated per the emission factors given in District Rule 4694). The information shall be recorded by the tank Permit to Operate number and by wine type, stated as either red wine or white wine. [District Rules 2201 and 4694]

19. When used for wine storage, daily throughput records, including records of filling and emptying operations, the dates of such operations, a unique identifier for each batch, the volume percent ethanol in the batch, and the volume of wine transferred, shall be maintained. [District Rules 2201 and 4694]

20. When used for wine storage, the operator shall record, on a weekly basis, the total gallons of wine contained in the tank and the maximum temperature of the stored wine. [District Rule 4694]

21. Records of total annual fermentation and total annual storage emissions, including calculation methods and parameters used, shall be maintained. [District Rule 1070 and 2201]

22. Separate annual records of total red wine and total white wine produced by fermentation at this facility, based on values reported to the Alcohol and Tobacco Tax and Trade Bureau (TTB), U.S. Department of the Treasury, shall be maintained. [District Rule 1070 and 2201]

DRAFT

CONDITIONS CONTINUE ON NEXT PAGE

23. All records shall be retained on-site for a period of at least five years and made available for District inspection upon request. [District Rules 2201 and 4694]

DRAFT

San Joaquin Valley
Air Pollution Control District

AUTHORITY TO CONSTRUCT

DRAFT

PERMIT NO: N-7855-725-0 **ISSUANCE DATE:** DRAFT

LEGAL OWNER OR OPERATOR: SUTTER HOME WINERY
MAILING ADDRESS: P O BOX 248
ST HELENA, CA 94574-0248

LOCATION: 18667 N JACOB BRACK RD
LODI, CA 95242

EQUIPMENT DESCRIPTION:
202,000 GALLON WHITE WINE FERMENTATION TANK AND WINE STORAGE TANK (TANK 1405) WITH PRESSURE/VACUUM VALVE AND INSULATION

CONDITIONS

1. {98} No air contaminant shall be released into the atmosphere which causes a public nuisance. [District Rule 4102]
2. The VOC emissions rate for fermentation operations in this tank shall not exceed 1.62 lb/day per 1000 gallons of tank capacity. [District Rule 2201]
3. The ethanol content of wine stored in this tank shall not exceed 23.9 percent by volume. [District Rule 2201]
4. When this tank is used for wine storage, the daily tank throughput, in gallons, shall not exceed five times the maximum nominal tank capacity stated on the equipment description. [District Rule 2201]
5. Total combined annual VOC emissions from all wine fermentation and wine storage operations at this facility shall not exceed 292,950 lb. [District Rule 2201]
6. Combined annual VOC emissions from all wine storage operations shall be determined as the sum of the emissions for each individual wine movement based on the volume transferred in each wine movement and the batch-specific wine storage emission factor calculated using the equation(s) specified within this permit. [District Rule 2201]
7. The annual VOC wine storage emission factor (EF) for each wine transfer shall be selected from the following emission factors based on the ethanol content of the wine transferred: For wine with ethanol content less than 14 volume percent: EF = 0.198 lb-VOC/1000 gallons; For wine with ethanol content between 14 and 21 volume percent, EF = 0.314 lb-VOC/1000 gallons; For wine with ethanol content greater than 21 volume percent, EF = 0.363 lb-VOC/1000 gallon. [District Rule 2201]

CONDITIONS CONTINUE ON NEXT PAGE

YOU MUST NOTIFY THE DISTRICT COMPLIANCE DIVISION AT (209) 557-6400 WHEN CONSTRUCTION IS COMPLETED AND PRIOR TO OPERATING THE EQUIPMENT OR MODIFICATIONS AUTHORIZED BY THIS AUTHORITY TO CONSTRUCT. This is NOT a PERMIT TO OPERATE. Approval or denial of a PERMIT TO OPERATE will be made after an inspection to verify that the equipment has been constructed in accordance with the approved plans, specifications and conditions of this Authority to Construct, and to determine if the equipment can be operated in compliance with all Rules and Regulations of the San Joaquin Valley Unified Air Pollution Control District. Unless construction has commenced pursuant to Rule 2050, this Authority to Construct shall expire and application shall be cancelled two years from the date of issuance. The applicant is responsible for complying with all laws, ordinances and regulations of all other governmental agencies which may pertain to the above equipment.

Seyed Sadredin, Executive Director / APCO

DRAFT

DAVID WARNER, Director of Permit Services
N-7855-725-0 : Mar 23 2011 1:26PM -- ROBERTSD : Joint Inspection NOT Required

8. Total annual VOC emissions from wine fermentation operations shall be determined by the following formula: Total annual VOC emissions = (Total Annual Red Wine Production-gal) x (6.2 lb-VOC/1000 gal) + (Total Annual White Wine Production-gal) x (2.5 lb-VOC/1000 gal). [District Rule 2201]
9. When used for wine storage, this tank shall be equipped with and operated with a pressure-vacuum relief valve, which shall operate within 10% of the maximum allowable working pressure of the tank, operate in accordance with the manufacturer's instructions, and be permanently labeled with the operating pressure settings. [District Rules 2201 and 4694]
10. When used for wine storage, the pressure-vacuum relief valve and storage tank shall remain in a gas-tight condition, except when the operating pressure of the tank exceeds the valve set pressure. A gas-tight condition shall be determined by measuring the gas leak in accordance with the procedures in EPA Method 21. [District Rules 2201 and 4694]
11. The temperature of the wine stored in this tank shall be maintained at or below 75 degrees Fahrenheit. For each batch of wine, the operator shall achieve the storage temperature of 75 degrees Fahrenheit or less within 60 days after completing fermentation, and shall maintain records to show when the required storage temperature of 75 degrees Fahrenheit or less was achieved. [District Rules 2201 and 4694]
12. The average fermentation temperature of each batch of must fermented in this tank shall not exceed 95 oF, calculated as the average of all temperature measurements for the batch taken at least every 12 hours over the course of the fermentation. [District Rule 2201]
13. A Three-Year Compliance Plan that demonstrates compliance with the requirements of Section 5.1 of District Rule 4694 for each year of the applicable compliance period shall be submitted to the District by no later than December 1, 2012, and every three years thereafter on or before December 1. [District Rule 4694]
14. A Three-Year Compliance Plan Verification that demonstrates that the Three-Year Compliance Plan elements are in effect shall be submitted to the District by no later than July 1, 2013, and every three years thereafter on or before July 1. [District Rule 4694]
15. An Annual Compliance Plan Demonstration that shows compliance with the applicable requirements of this rule shall be submitted to the District by no later than February 1, 2012, and every year thereafter on or before February 1. [District Rule 4694]
16. Operators using CER to mitigate fermentation emissions shall perform all monitoring and recordkeeping, as established in their approved Three-Year Compliance Plan, and shall maintain all records necessary to demonstrate compliance. [District Rule 4694]
17. Operators using District Obtained Emission Reductions (DOER) shall submit payment of DOER and administrative fees to the District no later than March 1, of the first year in the applicable compliance period. [District Rule 4694]
18. For each batch of must fermented in this tank, the operator shall record the fermentation completion date, the total gallons of must fermented, the average fermentation temperature and the uncontrolled fermentation emissions and fermentation emission reductions (calculated per the emission factors given in District Rule 4694). The information shall be recorded by the tank Permit to Operate number and by wine type, stated as either red wine or white wine. [District Rules 2201 and 4694]
19. When used for wine storage, daily throughput records, including records of filling and emptying operations, the dates of such operations, a unique identifier for each batch, the volume percent ethanol in the batch, and the volume of wine transferred, shall be maintained. [District Rules 2201 and 4694]
20. When used for wine storage, the operator shall record, on a weekly basis, the total gallons of wine contained in the tank and the maximum temperature of the stored wine. [District Rule 4694]
21. Records of total annual fermentation and total annual storage emissions, including calculation methods and parameters used, shall be maintained. [District Rule 1070 and 2201]
22. Separate annual records of total red wine and total white wine produced by fermentation at this facility, based on values reported to the Alcohol and Tobacco Tax and Trade Bureau (TTB), U.S. Department of the Treasury, shall be maintained. [District Rule 1070 and 2201]

DRAFT

CONDITIONS CONTINUE ON NEXT PAGE

23. All records shall be retained on-site for a period of at least five years and made available for District inspection upon request. [District Rules 2201 and 4694]

DRAFT

San Joaquin Valley
Air Pollution Control District

AUTHORITY TO CONSTRUCT

PERMIT NO: N-7855-726-0

ISSUANCE DATE: DRAFT

LEGAL OWNER OR OPERATOR: SUTTER HOME WINERY
MAILING ADDRESS: P O BOX 248
ST HELENA, CA 94574-0248

LOCATION: 18667 N JACOB BRACK RD
LODI, CA 95242

EQUIPMENT DESCRIPTION:
202,000 GALLON WHITE WINE FERMENTATION TANK AND WINE STORAGE TANK (TANK 1406) WITH PRESSURE/VACUUM VALVE AND INSULATION

CONDITIONS

1. {98} No air contaminant shall be released into the atmosphere which causes a public nuisance. [District Rule 4102]
2. The VOC emissions rate for fermentation operations in this tank shall not exceed 1.62 lb/day per 1000 gallons of tank capacity. [District Rule 2201]
3. The ethanol content of wine stored in this tank shall not exceed 23.9 percent by volume. [District Rule 2201]
4. When this tank is used for wine storage, the daily tank throughput, in gallons, shall not exceed five times the maximum nominal tank capacity stated on the equipment description. [District Rule 2201]
5. Total combined annual VOC emissions from all wine fermentation and wine storage operations at this facility shall not exceed 292,950 lb. [District Rule 2201]
6. Combined annual VOC emissions from all wine storage operations shall be determined as the sum of the emissions for each individual wine movement based on the volume transferred in each wine movement and the batch-specific wine storage emission factor calculated using the equation(s) specified within this permit. [District Rule 2201]
7. The annual VOC wine storage emission factor (EF) for each wine transfer shall be selected from the following emission factors based on the ethanol content of the wine transferred: For wine with ethanol content less than 14 volume percent: EF = 0.198 lb-VOC/1000 gallons; For wine with ethanol content between 14 and 21 volume percent, EF = 0.314 lb-VOC/1000 gallons; For wine with ethanol content greater than 21 volume percent, EF = 0.363 lb-VOC/1000 gallon. [District Rule 2201]

CONDITIONS CONTINUE ON NEXT PAGE

YOU MUST NOTIFY THE DISTRICT COMPLIANCE DIVISION AT (209) 557-6400 WHEN CONSTRUCTION IS COMPLETED AND PRIOR TO OPERATING THE EQUIPMENT OR MODIFICATIONS AUTHORIZED BY THIS AUTHORITY TO CONSTRUCT. This is NOT a PERMIT TO OPERATE. Approval or denial of a PERMIT TO OPERATE will be made after an inspection to verify that the equipment has been constructed in accordance with the approved plans, specifications and conditions of this Authority to Construct, and to determine if the equipment can be operated in compliance with all Rules and Regulations of the San Joaquin Valley Unified Air Pollution Control District. Unless construction has commenced pursuant to Rule 2050, this Authority to Construct shall expire and application shall be cancelled two years from the date of issuance. The applicant is responsible for complying with all laws, ordinances and regulations of all other governmental agencies which may pertain to the above equipment.

Seyed Sadredin, Executive Director / APCO

DRAFT

DAVID WARNER, Director of Permit Services
N-7855-726-0 : Mar 23 2011 1:26PM -- ROBERTSD : Joint Inspection NOT Required

8. Total annual VOC emissions from wine fermentation operations shall be determined by the following formula: Total annual VOC emissions = (Total Annual Red Wine Production-gal) x (6.2 lb-VOC/1000 gal) + (Total Annual White Wine Production-gal) x (2.5 lb-VOC/1000 gal). [District Rule 2201]

9. When used for wine storage, this tank shall be equipped with and operated with a pressure-vacuum relief valve, which shall operate within 10% of the maximum allowable working pressure of the tank, operate in accordance with the manufacturer's instructions, and be permanently labeled with the operating pressure settings. [District Rules 2201 and 4694]

10. When used for wine storage, the pressure-vacuum relief valve and storage tank shall remain in a gas-tight condition, except when the operating pressure of the tank exceeds the valve set pressure. A gas-tight condition shall be determined by measuring the gas leak in accordance with the procedures in EPA Method 21. [District Rules 2201 and 4694]

11. The temperature of the wine stored in this tank shall be maintained at or below 75 degrees Fahrenheit. For each batch of wine, the operator shall achieve the storage temperature of 75 degrees Fahrenheit or less within 60 days after completing fermentation, and shall maintain records to show when the required storage temperature of 75 degrees Fahrenheit or less was achieved. [District Rules 2201 and 4694]

12. The average fermentation temperature of each batch of must fermented in this tank shall not exceed 95 oF, calculated as the average of all temperature measurements for the batch taken at least every 12 hours over the course of the fermentation. [District Rule 2201]

13. A Three-Year Compliance Plan that demonstrates compliance with the requirements of Section 5.1 of District Rule 4694 for each year of the applicable compliance period shall be submitted to the District by no later than December 1, 2012, and every three years thereafter on or before December 1. [District Rule 4694]

14. A Three-Year Compliance Plan Verification that demonstrates that the Three-Year Compliance Plan elements are in effect shall be submitted to the District by no later than July 1, 2013, and every three years thereafter on or before July 1. [District Rule 4694]

15. An Annual Compliance Plan Demonstration that shows compliance with the applicable requirements of this rule shall be submitted to the District by no later than February 1, 2012, and every year thereafter on or before February 1. [District Rule 4694]

16. Operators using CER to mitigate fermentation emissions shall perform all monitoring and recordkeeping, as established in their approved Three-Year Compliance Plan, and shall maintain all records necessary to demonstrate compliance. [District Rule 4694]

17. Operators using District Obtained Emission Reductions (DOER) shall submit payment of DOER and administrative fees to the District no later than March 1, of the first year in the applicable compliance period. [District Rule 4694]

18. For each batch of must fermented in this tank, the operator shall record the fermentation completion date, the total gallons of must fermented, the average fermentation temperature and the uncontrolled fermentation emissions and fermentation emission reductions (calculated per the emission factors given in District Rule 4694). The information shall be recorded by the tank Permit to Operate number and by wine type, stated as either red wine or white wine. [District Rules 2201 and 4694]

19. When used for wine storage, daily throughput records, including records of filling and emptying operations, the dates of such operations, a unique identifier for each batch, the volume percent ethanol in the batch, and the volume of wine transferred, shall be maintained. [District Rules 2201 and 4694]

20. When used for wine storage, the operator shall record, on a weekly basis, the total gallons of wine contained in the tank and the maximum temperature of the stored wine. [District Rule 4694]

21. Records of total annual fermentation and total annual storage emissions, including calculation methods and parameters used, shall be maintained. [District Rule 1070 and 2201]

22. Separate annual records of total red wine and total white wine produced by fermentation at this facility, based on values reported to the Alcohol and Tobacco Tax and Trade Bureau (TTB), U.S. Department of the Treasury, shall be maintained. [District Rule 1070 and 2201]

DRAFT

CONDITIONS CONTINUE ON NEXT PAGE

23. All records shall be retained on-site for a period of at least five years and made available for District inspection upon request. [District Rules 2201 and 4694]

DRAFT

San Joaquin Valley
Air Pollution Control District

AUTHORITY TO CONSTRUCT

DRAFT

PERMIT NO: N-7855-727-0 **ISSUANCE DATE:** DRAFT

LEGAL OWNER OR OPERATOR: SUTTER HOME WINERY
MAILING ADDRESS: P O BOX 248
ST HELENA, CA 94574-0248

LOCATION: 18667 N JACOB BRACK RD
LODI, CA 95242

EQUIPMENT DESCRIPTION:
202,000 GALLON WHITE WINE FERMENTATION TANK AND WINE STORAGE TANK (TANK 1407) WITH PRESSURE/VACUUM VALVE AND INSULATION

CONDITIONS

1. {98} No air contaminant shall be released into the atmosphere which causes a public nuisance. [District Rule 4102]
2. The VOC emissions rate for fermentation operations in this tank shall not exceed 1.62 lb/day per 1000 gallons of tank capacity. [District Rule 2201]
3. The ethanol content of wine stored in this tank shall not exceed 23.9 percent by volume. [District Rule 2201]
4. When this tank is used for wine storage, the daily tank throughput, in gallons, shall not exceed five times the maximum nominal tank capacity stated on the equipment description. [District Rule 2201]
5. Total combined annual VOC emissions from all wine fermentation and wine storage operations at this facility shall not exceed 292,950 lb. [District Rule 2201]
6. Combined annual VOC emissions from all wine storage operations shall be determined as the sum of the emissions for each individual wine movement based on the volume transferred in each wine movement and the batch-specific wine storage emission factor calculated using the equation(s) specified within this permit. [District Rule 2201]
7. The annual VOC wine storage emission factor (EF) for each wine transfer shall be selected from the following emission factors based on the ethanol content of the wine transferred: For wine with ethanol content less than 14 volume percent: EF = 0.198 lb-VOC/1000 gallons; For wine with ethanol content between 14 and 21 volume percent, EF = 0.314 lb-VOC/1000 gallons; For wine with ethanol content greater than 21 volume percent, EF = 0.363 lb-VOC/1000 gallon. [District Rule 2201]

CONDITIONS CONTINUE ON NEXT PAGE

YOU MUST NOTIFY THE DISTRICT COMPLIANCE DIVISION AT (209) 557-6400 WHEN CONSTRUCTION IS COMPLETED AND PRIOR TO OPERATING THE EQUIPMENT OR MODIFICATIONS AUTHORIZED BY THIS AUTHORITY TO CONSTRUCT. This is NOT a PERMIT TO OPERATE. Approval or denial of a PERMIT TO OPERATE will be made after an inspection to verify that the equipment has been constructed in accordance with the approved plans, specifications and conditions of this Authority to Construct, and to determine if the equipment can be operated in compliance with all Rules and Regulations of the San Joaquin Valley Unified Air Pollution Control District. Unless construction has commenced pursuant to Rule 2050, this Authority to Construct shall expire and application shall be cancelled two years from the date of issuance. The applicant is responsible for complying with all laws, ordinances and regulations of all other governmental agencies which may pertain to the above equipment.

Seyed Sadredin, Executive Director / APCO

DRAFT

DAVID WARNER, Director of Permit Services
N-7855-727-0 : Mar 23 2011 1:26PM -- ROBERTSD : Joint Inspection NOT Required

8. Total annual VOC emissions from wine fermentation operations shall be determined by the following formula: Total annual VOC emissions = (Total Annual Red Wine Production-gal) x (6.2 lb-VOC/1000 gal) + (Total Annual White Wine Production-gal) x (2.5 lb-VOC/1000 gal). [District Rule 2201]

9. When used for wine storage, this tank shall be equipped with and operated with a pressure-vacuum relief valve, which shall operate within 10% of the maximum allowable working pressure of the tank, operate in accordance with the manufacturer's instructions, and be permanently labeled with the operating pressure settings. [District Rules 2201 and 4694]

10. When used for wine storage, the pressure-vacuum relief valve and storage tank shall remain in a gas-tight condition, except when the operating pressure of the tank exceeds the valve set pressure. A gas-tight condition shall be determined by measuring the gas leak in accordance with the procedures in EPA Method 21. [District Rules 2201 and 4694]

11. The temperature of the wine stored in this tank shall be maintained at or below 75 degrees Fahrenheit. For each batch of wine, the operator shall achieve the storage temperature of 75 degrees Fahrenheit or less within 60 days after completing fermentation, and shall maintain records to show when the required storage temperature of 75 degrees Fahrenheit or less was achieved. [District Rules 2201 and 4694]

12. The average fermentation temperature of each batch of must fermented in this tank shall not exceed 95 oF, calculated as the average of all temperature measurements for the batch taken at least every 12 hours over the course of the fermentation. [District Rule 2201]

13. A Three-Year Compliance Plan that demonstrates compliance with the requirements of Section 5.1 of District Rule 4694 for each year of the applicable compliance period shall be submitted to the District by no later than December 1, 2012, and every three years thereafter on or before December 1. [District Rule 4694]

14. A Three-Year Compliance Plan Verification that demonstrates that the Three-Year Compliance Plan elements are in effect shall be submitted to the District by no later than July 1, 2013, and every three years thereafter on or before July 1. [District Rule 4694]

15. An Annual Compliance Plan Demonstration that shows compliance with the applicable requirements of this rule shall be submitted to the District by no later than February 1, 2012, and every year thereafter on or before February 1. [District Rule 4694]

16. Operators using CER to mitigate fermentation emissions shall perform all monitoring and recordkeeping, as established in their approved Three-Year Compliance Plan, and shall maintain all records necessary to demonstrate compliance. [District Rule 4694]

17. Operators using District Obtained Emission Reductions (DOER) shall submit payment of DOER and administrative fees to the District no later than March 1, of the first year in the applicable compliance period. [District Rule 4694]

18. For each batch of must fermented in this tank, the operator shall record the fermentation completion date, the total gallons of must fermented, the average fermentation temperature and the uncontrolled fermentation emissions and fermentation emission reductions (calculated per the emission factors given in District Rule 4694). The information shall be recorded by the tank Permit to Operate number and by wine type, stated as either red wine or white wine. [District Rules 2201 and 4694]

19. When used for wine storage, daily throughput records, including records of filling and emptying operations, the dates of such operations, a unique identifier for each batch, the volume percent ethanol in the batch, and the volume of wine transferred, shall be maintained. [District Rules 2201 and 4694]

20. When used for wine storage, the operator shall record, on a weekly basis, the total gallons of wine contained in the tank and the maximum temperature of the stored wine. [District Rule 4694]

21. Records of total annual fermentation and total annual storage emissions, including calculation methods and parameters used, shall be maintained. [District Rule 1070 and 2201]

22. Separate annual records of total red wine and total white wine produced by fermentation at this facility, based on values reported to the Alcohol and Tobacco Tax and Trade Bureau (TTB), U.S. Department of the Treasury, shall be maintained. [District Rule 1070 and 2201]

DRAFT

CONDITIONS CONTINUE ON NEXT PAGE

23. All records shall be retained on-site for a period of at least five years and made available for District inspection upon request. [District Rules 2201 and 4694]

DRAFT

San Joaquin Valley
Air Pollution Control District

AUTHORITY TO CONSTRUCT

DRAFT

PERMIT NO: N-7855-728-0 **ISSUANCE DATE:** DRAFT

LEGAL OWNER OR OPERATOR: SUTTER HOME WINERY
MAILING ADDRESS: P O BOX 248
ST HELENA, CA 94574-0248

LOCATION: 18667 N JACOB BRACK RD
LODI, CA 95242

EQUIPMENT DESCRIPTION:
202,000 GALLON WHITE WINE FERMENTATION TANK AND WINE STORAGE TANK (TANK 1408) WITH PRESSURE/VACUUM VALVE AND INSULATION

CONDITIONS

1. {98} No air contaminant shall be released into the atmosphere which causes a public nuisance. [District Rule 4102]
2. The VOC emissions rate for fermentation operations in this tank shall not exceed 1.62 lb/day per 1000 gallons of tank capacity. [District Rule 2201]
3. The ethanol content of wine stored in this tank shall not exceed 23.9 percent by volume. [District Rule 2201]
4. When this tank is used for wine storage, the daily tank throughput, in gallons, shall not exceed five times the maximum nominal tank capacity stated on the equipment description. [District Rule 2201]
5. Total combined annual VOC emissions from all wine fermentation and wine storage operations at this facility shall not exceed 292,950 lb. [District Rule 2201]
6. Combined annual VOC emissions from all wine storage operations shall be determined as the sum of the emissions for each individual wine movement based on the volume transferred in each wine movement and the batch-specific wine storage emission factor calculated using the equation(s) specified within this permit. [District Rule 2201]
7. The annual VOC wine storage emission factor (EF) for each wine transfer shall be selected from the following emission factors based on the ethanol content of the wine transferred: For wine with ethanol content less than 14 volume percent: EF = 0.198 lb-VOC/1000 gallons; For wine with ethanol content between 14 and 21 volume percent, EF = 0.314 lb-VOC/1000 gallons; For wine with ethanol content greater than 21 volume percent, EF = 0.363 lb-VOC/1000 gallon. [District Rule 2201]

CONDITIONS CONTINUE ON NEXT PAGE

YOU MUST NOTIFY THE DISTRICT COMPLIANCE DIVISION AT (209) 557-6400 WHEN CONSTRUCTION IS COMPLETED AND PRIOR TO OPERATING THE EQUIPMENT OR MODIFICATIONS AUTHORIZED BY THIS AUTHORITY TO CONSTRUCT. This is NOT a PERMIT TO OPERATE. Approval or denial of a PERMIT TO OPERATE will be made after an inspection to verify that the equipment has been constructed in accordance with the approved plans, specifications and conditions of this Authority to Construct, and to determine if the equipment can be operated in compliance with all Rules and Regulations of the San Joaquin Valley Unified Air Pollution Control District. Unless construction has commenced pursuant to Rule 2050, this Authority to Construct shall expire and application shall be cancelled two years from the date of issuance. The applicant is responsible for complying with all laws, ordinances and regulations of all other governmental agencies which may pertain to the above equipment.

Seyed Sadredin, Executive Director / APCO

DRAFT

DAVID WARNER, Director of Permit Services
N-7855-728-0 : Mar 23 2011 1:26PM -- ROBERTSD : Joint Inspection NOT Required

8. Total annual VOC emissions from wine fermentation operations shall be determined by the following formula: Total annual VOC emissions = (Total Annual Red Wine Production-gal) x (6.2 lb-VOC/1000 gal) + (Total Annual White Wine Production-gal) x (2.5 lb-VOC/1000 gal). [District Rule 2201]

9. When used for wine storage, this tank shall be equipped with and operated with a pressure-vacuum relief valve, which shall operate within 10% of the maximum allowable working pressure of the tank, operate in accordance with the manufacturer's instructions, and be permanently labeled with the operating pressure settings. [District Rules 2201 and 4694]

10. When used for wine storage, the pressure-vacuum relief valve and storage tank shall remain in a gas-tight condition, except when the operating pressure of the tank exceeds the valve set pressure. A gas-tight condition shall be determined by measuring the gas leak in accordance with the procedures in EPA Method 21. [District Rules 2201 and 4694]

11. The temperature of the wine stored in this tank shall be maintained at or below 75 degrees Fahrenheit. For each batch of wine, the operator shall achieve the storage temperature of 75 degrees Fahrenheit or less within 60 days after completing fermentation, and shall maintain records to show when the required storage temperature of 75 degrees Fahrenheit or less was achieved. [District Rules 2201 and 4694]

12. The average fermentation temperature of each batch of must fermented in this tank shall not exceed 95 oF, calculated as the average of all temperature measurements for the batch taken at least every 12 hours over the course of the fermentation. [District Rule 2201]

13. A Three-Year Compliance Plan that demonstrates compliance with the requirements of Section 5.1 of District Rule 4694 for each year of the applicable compliance period shall be submitted to the District by no later than December 1, 2012, and every three years thereafter on or before December 1. [District Rule 4694]

14. A Three-Year Compliance Plan Verification that demonstrates that the Three-Year Compliance Plan elements are in effect shall be submitted to the District by no later than July 1, 2013, and every three years thereafter on or before July 1. [District Rule 4694]

15. An Annual Compliance Plan Demonstration that shows compliance with the applicable requirements of this rule shall be submitted to the District by no later than February 1, 2012, and every year thereafter on or before February 1. [District Rule 4694]

16. Operators using CER to mitigate fermentation emissions shall perform all monitoring and recordkeeping, as established in their approved Three-Year Compliance Plan, and shall maintain all records necessary to demonstrate compliance. [District Rule 4694]

17. Operators using District Obtained Emission Reductions (DOER) shall submit payment of DOER and administrative fees to the District no later than March 1, of the first year in the applicable compliance period. [District Rule 4694]

18. For each batch of must fermented in this tank, the operator shall record the fermentation completion date, the total gallons of must fermented, the average fermentation temperature and the uncontrolled fermentation emissions and fermentation emission reductions (calculated per the emission factors given in District Rule 4694). The information shall be recorded by the tank Permit to Operate number and by wine type, stated as either red wine or white wine. [District Rules 2201 and 4694]

19. When used for wine storage, daily throughput records, including records of filling and emptying operations, the dates of such operations, a unique identifier for each batch, the volume percent ethanol in the batch, and the volume of wine transferred, shall be maintained. [District Rules 2201 and 4694]

20. When used for wine storage, the operator shall record, on a weekly basis, the total gallons of wine contained in the tank and the maximum temperature of the stored wine. [District Rule 4694]

21. Records of total annual fermentation and total annual storage emissions, including calculation methods and parameters used, shall be maintained. [District Rule 1070 and 2201]

22. Separate annual records of total red wine and total white wine produced by fermentation at this facility, based on values reported to the Alcohol and Tobacco Tax and Trade Bureau (TTB), U.S. Department of the Treasury, shall be maintained. [District Rule 1070 and 2201]

DRAFT

CONDITIONS CONTINUE ON NEXT PAGE

23. All records shall be retained on-site for a period of at least five years and made available for District inspection upon request. [District Rules 2201 and 4694]

DRAFT

San Joaquin Valley
Air Pollution Control District

AUTHORITY TO CONSTRUCT

DRAFT

PERMIT NO: N-7855-729-0 **ISSUANCE DATE:** DRAFT

LEGAL OWNER OR OPERATOR: SUTTER HOME WINERY
MAILING ADDRESS: P O BOX 248
ST HELENA, CA 94574-0248

LOCATION: 18667 N JACOB BRACK RD
LODI, CA 95242

EQUIPMENT DESCRIPTION:
202,000 GALLON WHITE WINE FERMENTATION TANK AND WINE STORAGE TANK (TANK 1409) WITH PRESSURE/VACUUM VALVE AND INSULATION

CONDITIONS

1. {98} No air contaminant shall be released into the atmosphere which causes a public nuisance. [District Rule 4102]
2. The VOC emissions rate for fermentation operations in this tank shall not exceed 1.62 lb/day per 1000 gallons of tank capacity. [District Rule 2201]
3. The ethanol content of wine stored in this tank shall not exceed 23.9 percent by volume. [District Rule 2201]
4. When this tank is used for wine storage, the daily tank throughput, in gallons, shall not exceed five times the maximum nominal tank capacity stated on the equipment description. [District Rule 2201]
5. Total combined annual VOC emissions from all wine fermentation and wine storage operations at this facility shall not exceed 292,950 lb. [District Rule 2201]
6. Combined annual VOC emissions from all wine storage operations shall be determined as the sum of the emissions for each individual wine movement based on the volume transferred in each wine movement and the batch-specific wine storage emission factor calculated using the equation(s) specified within this permit. [District Rule 2201]
7. The annual VOC wine storage emission factor (EF) for each wine transfer shall be selected from the following emission factors based on the ethanol content of the wine transferred: For wine with ethanol content less than 14 volume percent: EF = 0.198 lb-VOC/1000 gallons; For wine with ethanol content between 14 and 21 volume percent, EF = 0.314 lb-VOC/1000 gallons; For wine with ethanol content greater than 21 volume percent, EF = 0.363 lb-VOC/1000 gallon. [District Rule 2201]

CONDITIONS CONTINUE ON NEXT PAGE

YOU MUST NOTIFY THE DISTRICT COMPLIANCE DIVISION AT (209) 557-6400 WHEN CONSTRUCTION IS COMPLETED AND PRIOR TO OPERATING THE EQUIPMENT OR MODIFICATIONS AUTHORIZED BY THIS AUTHORITY TO CONSTRUCT. This is NOT a PERMIT TO OPERATE. Approval or denial of a PERMIT TO OPERATE will be made after an inspection to verify that the equipment has been constructed in accordance with the approved plans, specifications and conditions of this Authority to Construct, and to determine if the equipment can be operated in compliance with all Rules and Regulations of the San Joaquin Valley Unified Air Pollution Control District. Unless construction has commenced pursuant to Rule 2050, this Authority to Construct shall expire and application shall be cancelled two years from the date of issuance. The applicant is responsible for complying with all laws, ordinances and regulations of all other governmental agencies which may pertain to the above equipment.

Seyed Sadredin, Executive Director / APCO

DRAFT

DAVID WARNER, Director of Permit Services
N-7855-729-0 : Mar 23 2011 1:26PM – ROBERTSD : Joint Inspection NOT Required

8. Total annual VOC emissions from wine fermentation operations shall be determined by the following formula: Total annual VOC emissions = (Total Annual Red Wine Production-gal) x (6.2 lb-VOC/1000 gal) + (Total Annual White Wine Production-gal) x (2.5 lb-VOC/1000 gal). [District Rule 2201]
9. When used for wine storage, this tank shall be equipped with and operated with a pressure-vacuum relief valve, which shall operate within 10% of the maximum allowable working pressure of the tank, operate in accordance with the manufacturer's instructions, and be permanently labeled with the operating pressure settings. [District Rules 2201 and 4694]
10. When used for wine storage, the pressure-vacuum relief valve and storage tank shall remain in a gas-tight condition, except when the operating pressure of the tank exceeds the valve set pressure. A gas-tight condition shall be determined by measuring the gas leak in accordance with the procedures in EPA Method 21. [District Rules 2201 and 4694]
11. The temperature of the wine stored in this tank shall be maintained at or below 75 degrees Fahrenheit. For each batch of wine, the operator shall achieve the storage temperature of 75 degrees Fahrenheit or less within 60 days after completing fermentation, and shall maintain records to show when the required storage temperature of 75 degrees Fahrenheit or less was achieved. [District Rules 2201 and 4694]
12. The average fermentation temperature of each batch of must fermented in this tank shall not exceed 95 oF, calculated as the average of all temperature measurements for the batch taken at least every 12 hours over the course of the fermentation. [District Rule 2201]
13. A Three-Year Compliance Plan that demonstrates compliance with the requirements of Section 5.1 of District Rule 4694 for each year of the applicable compliance period shall be submitted to the District by no later than December 1, 2012, and every three years thereafter on or before December 1. [District Rule 4694]
14. A Three-Year Compliance Plan Verification that demonstrates that the Three-Year Compliance Plan elements are in effect shall be submitted to the District by no later than July 1, 2013, and every three years thereafter on or before July 1. [District Rule 4694]
15. An Annual Compliance Plan Demonstration that shows compliance with the applicable requirements of this rule shall be submitted to the District by no later than February 1, 2012, and every year thereafter on or before February 1. [District Rule 4694]
16. Operators using CER to mitigate fermentation emissions shall perform all monitoring and recordkeeping, as established in their approved Three-Year Compliance Plan, and shall maintain all records necessary to demonstrate compliance. [District Rule 4694]
17. Operators using District Obtained Emission Reductions (DOER) shall submit payment of DOER and administrative fees to the District no later than March 1, of the first year in the applicable compliance period. [District Rule 4694]
18. For each batch of must fermented in this tank, the operator shall record the fermentation completion date, the total gallons of must fermented, the average fermentation temperature and the uncontrolled fermentation emissions and fermentation emission reductions (calculated per the emission factors given in District Rule 4694). The information shall be recorded by the tank Permit to Operate number and by wine type, stated as either red wine or white wine. [District Rules 2201 and 4694]
19. When used for wine storage, daily throughput records, including records of filling and emptying operations, the dates of such operations, a unique identifier for each batch, the volume percent ethanol in the batch, and the volume of wine transferred, shall be maintained. [District Rules 2201 and 4694]
20. When used for wine storage, the operator shall record, on a weekly basis, the total gallons of wine contained in the tank and the maximum temperature of the stored wine. [District Rule 4694]
21. Records of total annual fermentation and total annual storage emissions, including calculation methods and parameters used, shall be maintained. [District Rule 1070 and 2201]
22. Separate annual records of total red wine and total white wine produced by fermentation at this facility, based on values reported to the Alcohol and Tobacco Tax and Trade Bureau (TTB), U.S. Department of the Treasury, shall be maintained. [District Rule 1070 and 2201]

DRAFT

CONDITIONS CONTINUE ON NEXT PAGE

23. All records shall be retained on-site for a period of at least five years and made available for District inspection upon request. [District Rules 2201 and 4694]

DRAFT

San Joaquin Valley
Air Pollution Control District

AUTHORITY TO CONSTRUCT

DRAFT

PERMIT NO: N-7855-730-0 **ISSUANCE DATE:** DRAFT

LEGAL OWNER OR OPERATOR: SUTTER HOME WINERY
MAILING ADDRESS: P O BOX 248
ST HELENA, CA 94574-0248

LOCATION: 18667 N JACOB BRACK RD
LODI, CA 95242

EQUIPMENT DESCRIPTION:
202,000 GALLON WHITE WINE FERMENTATION TANK AND WINE STORAGE TANK (TANK 1410) WITH PRESSURE/VACUUM VALVE AND INSULATION

CONDITIONS

1. {98} No air contaminant shall be released into the atmosphere which causes a public nuisance. [District Rule 4102]
2. The VOC emissions rate for fermentation operations in this tank shall not exceed 1.62 lb/day per 1000 gallons of tank capacity. [District Rule 2201]
3. The ethanol content of wine stored in this tank shall not exceed 23.9 percent by volume. [District Rule 2201]
4. When this tank is used for wine storage, the daily tank throughput, in gallons, shall not exceed five times the maximum nominal tank capacity stated on the equipment description. [District Rule 2201]
5. Total combined annual VOC emissions from all wine fermentation and wine storage operations at this facility shall not exceed 292,950 lb. [District Rule 2201]
6. Combined annual VOC emissions from all wine storage operations shall be determined as the sum of the emissions for each individual wine movement based on the volume transferred in each wine movement and the batch-specific wine storage emission factor calculated using the equation(s) specified within this permit. [District Rule 2201]
7. The annual VOC wine storage emission factor (EF) for each wine transfer shall be selected from the following emission factors based on the ethanol content of the wine transferred: For wine with ethanol content less than 14 volume percent: EF = 0.198 lb-VOC/1000 gallons; For wine with ethanol content between 14 and 21 volume percent, EF = 0.314 lb-VOC/1000 gallons; For wine with ethanol content greater than 21 volume percent, EF = 0.363 lb-VOC/1000 gallon. [District Rule 2201]

CONDITIONS CONTINUE ON NEXT PAGE

YOU MUST NOTIFY THE DISTRICT COMPLIANCE DIVISION AT (209) 557-6400 WHEN CONSTRUCTION IS COMPLETED AND PRIOR TO OPERATING THE EQUIPMENT OR MODIFICATIONS AUTHORIZED BY THIS AUTHORITY TO CONSTRUCT. This is NOT a PERMIT TO OPERATE. Approval or denial of a PERMIT TO OPERATE will be made after an inspection to verify that the equipment has been constructed in accordance with the approved plans, specifications and conditions of this Authority to Construct, and to determine if the equipment can be operated in compliance with all Rules and Regulations of the San Joaquin Valley Unified Air Pollution Control District. Unless construction has commenced pursuant to Rule 2050, this Authority to Construct shall expire and application shall be cancelled two years from the date of issuance. The applicant is responsible for complying with all laws, ordinances and regulations of all other governmental agencies which may pertain to the above equipment.

Seyed Sadredin, Executive Director / APCO

DRAFT

DAVID WARNER, Director of Permit Services
N-7855-730-0 : Mar 23 2011 1:26PM -- ROBERTSD : Joint Inspection NOT Required

8. Total annual VOC emissions from wine fermentation operations shall be determined by the following formula: Total annual VOC emissions = (Total Annual Red Wine Production-gal) x (6.2 lb-VOC/1000 gal) + (Total Annual White Wine Production-gal) x (2.5 lb-VOC/1000 gal). [District Rule 2201]

9. When used for wine storage, this tank shall be equipped with and operated with a pressure-vacuum relief valve, which shall operate within 10% of the maximum allowable working pressure of the tank, operate in accordance with the manufacturer's instructions, and be permanently labeled with the operating pressure settings. [District Rules 2201 and 4694]

10. When used for wine storage, the pressure-vacuum relief valve and storage tank shall remain in a gas-tight condition, except when the operating pressure of the tank exceeds the valve set pressure. A gas-tight condition shall be determined by measuring the gas leak in accordance with the procedures in EPA Method 21. [District Rules 2201 and 4694]

11. The temperature of the wine stored in this tank shall be maintained at or below 75 degrees Fahrenheit. For each batch of wine, the operator shall achieve the storage temperature of 75 degrees Fahrenheit or less within 60 days after completing fermentation, and shall maintain records to show when the required storage temperature of 75 degrees Fahrenheit or less was achieved. [District Rules 2201 and 4694]

12. The average fermentation temperature of each batch of must fermented in this tank shall not exceed 95 oF, calculated as the average of all temperature measurements for the batch taken at least every 12 hours over the course of the fermentation. [District Rule 2201]

13. A Three-Year Compliance Plan that demonstrates compliance with the requirements of Section 5.1 of District Rule 4694 for each year of the applicable compliance period shall be submitted to the District by no later than December 1, 2012, and every three years thereafter on or before December 1. [District Rule 4694]

14. A Three-Year Compliance Plan Verification that demonstrates that the Three-Year Compliance Plan elements are in effect shall be submitted to the District by no later than July 1, 2013, and every three years thereafter on or before July 1. [District Rule 4694]

15. An Annual Compliance Plan Demonstration that shows compliance with the applicable requirements of this rule shall be submitted to the District by no later than February 1, 2012, and every year thereafter on or before February 1. [District Rule 4694]

16. Operators using CER to mitigate fermentation emissions shall perform all monitoring and recordkeeping, as established in their approved Three-Year Compliance Plan, and shall maintain all records necessary to demonstrate compliance. [District Rule 4694]

17. Operators using District Obtained Emission Reductions (DOER) shall submit payment of DOER and administrative fees to the District no later than March 1, of the first year in the applicable compliance period. [District Rule 4694]

18. For each batch of must fermented in this tank, the operator shall record the fermentation completion date, the total gallons of must fermented, the average fermentation temperature and the uncontrolled fermentation emissions and fermentation emission reductions (calculated per the emission factors given in District Rule 4694). The information shall be recorded by the tank Permit to Operate number and by wine type, stated as either red wine or white wine. [District Rules 2201 and 4694]

19. When used for wine storage, daily throughput records, including records of filling and emptying operations, the dates of such operations, a unique identifier for each batch, the volume percent ethanol in the batch, and the volume of wine transferred, shall be maintained. [District Rules 2201 and 4694]

20. When used for wine storage, the operator shall record, on a weekly basis, the total gallons of wine contained in the tank and the maximum temperature of the stored wine. [District Rule 4694]

21. Records of total annual fermentation and total annual storage emissions, including calculation methods and parameters used, shall be maintained. [District Rule 1070 and 2201]

22. Separate annual records of total red wine and total white wine produced by fermentation at this facility, based on values reported to the Alcohol and Tobacco Tax and Trade Bureau (TTB), U.S. Department of the Treasury, shall be maintained. [District Rule 1070 and 2201]

DRAFT

CONDITIONS CONTINUE ON NEXT PAGE

23. All records shall be retained on-site for a period of at least five years and made available for District inspection upon request. [District Rules 2201 and 4694]

DRAFT

San Joaquin Valley
Air Pollution Control District

AUTHORITY TO CONSTRUCT

DRAFT

PERMIT NO: N-7855-731-0 **ISSUANCE DATE:** DRAFT

LEGAL OWNER OR OPERATOR: SUTTER HOME WINERY
MAILING ADDRESS: P O BOX 248
ST HELENA, CA 94574-0248

LOCATION: 18667 N JACOB BRACK RD
LODI, CA 95242

EQUIPMENT DESCRIPTION:
202,000 GALLON WHITE WINE FERMENTATION TANK AND WINE STORAGE TANK (TANK 1411) WITH PRESSURE/VACUUM VALVE AND INSULATION

CONDITIONS

1. {98} No air contaminant shall be released into the atmosphere which causes a public nuisance. [District Rule 4102]
2. The VOC emissions rate for fermentation operations in this tank shall not exceed 1.62 lb/day per 1000 gallons of tank capacity. [District Rule 2201]
3. The ethanol content of wine stored in this tank shall not exceed 23.9 percent by volume. [District Rule 2201]
4. When this tank is used for wine storage, the daily tank throughput, in gallons, shall not exceed five times the maximum nominal tank capacity stated on the equipment description. [District Rule 2201]
5. Total combined annual VOC emissions from all wine fermentation and wine storage operations at this facility shall not exceed 292,950 lb. [District Rule 2201]
6. Combined annual VOC emissions from all wine storage operations shall be determined as the sum of the emissions for each individual wine movement based on the volume transferred in each wine movement and the batch-specific wine storage emission factor calculated using the equation(s) specified within this permit. [District Rule 2201]
7. The annual VOC wine storage emission factor (EF) for each wine transfer shall be selected from the following emission factors based on the ethanol content of the wine transferred: For wine with ethanol content less than 14 volume percent: EF = 0.198 lb-VOC/1000 gallons; For wine with ethanol content between 14 and 21 volume percent, EF = 0.314 lb-VOC/1000 gallons; For wine with ethanol content greater than 21 volume percent, EF = 0.363 lb-VOC/1000 gallon. [District Rule 2201]

CONDITIONS CONTINUE ON NEXT PAGE

YOU MUST NOTIFY THE DISTRICT COMPLIANCE DIVISION AT (209) 557-6400 WHEN CONSTRUCTION IS COMPLETED AND PRIOR TO OPERATING THE EQUIPMENT OR MODIFICATIONS AUTHORIZED BY THIS AUTHORITY TO CONSTRUCT. This is NOT a PERMIT TO OPERATE. Approval or denial of a PERMIT TO OPERATE will be made after an inspection to verify that the equipment has been constructed in accordance with the approved plans, specifications and conditions of this Authority to Construct, and to determine if the equipment can be operated in compliance with all Rules and Regulations of the San Joaquin Valley Unified Air Pollution Control District. Unless construction has commenced pursuant to Rule 2050, this Authority to Construct shall expire and application shall be cancelled two years from the date of issuance. The applicant is responsible for complying with all laws, ordinances and regulations of all other governmental agencies which may pertain to the above equipment.

Seyed Sadredin, Executive Director / APCO

DRAFT

DAVID WARNER, Director of Permit Services
N-7855-731-0 : Mar 23 2011 1:26PM -- ROBERTSD : Joint Inspection NOT Required

8. Total annual VOC emissions from wine fermentation operations shall be determined by the following formula: Total annual VOC emissions = (Total Annual Red Wine Production-gal) x (6.2 lb-VOC/1000 gal) + (Total Annual White Wine Production-gal) x (2.5 lb-VOC/1000 gal). [District Rule 2201]

9. When used for wine storage, this tank shall be equipped with and operated with a pressure-vacuum relief valve, which shall operate within 10% of the maximum allowable working pressure of the tank, operate in accordance with the manufacturer's instructions, and be permanently labeled with the operating pressure settings. [District Rules 2201 and 4694]

10. When used for wine storage, the pressure-vacuum relief valve and storage tank shall remain in a gas-tight condition, except when the operating pressure of the tank exceeds the valve set pressure. A gas-tight condition shall be determined by measuring the gas leak in accordance with the procedures in EPA Method 21. [District Rules 2201 and 4694]

11. The temperature of the wine stored in this tank shall be maintained at or below 75 degrees Fahrenheit. For each batch of wine, the operator shall achieve the storage temperature of 75 degrees Fahrenheit or less within 60 days after completing fermentation, and shall maintain records to show when the required storage temperature of 75 degrees Fahrenheit or less was achieved. [District Rules 2201 and 4694]

12. The average fermentation temperature of each batch of must fermented in this tank shall not exceed 95 oF, calculated as the average of all temperature measurements for the batch taken at least every 12 hours over the course of the fermentation. [District Rule 2201]

13. A Three-Year Compliance Plan that demonstrates compliance with the requirements of Section 5.1 of District Rule 4694 for each year of the applicable compliance period shall be submitted to the District by no later than December 1, 2012, and every three years thereafter on or before December 1. [District Rule 4694]

14. A Three-Year Compliance Plan Verification that demonstrates that the Three-Year Compliance Plan elements are in effect shall be submitted to the District by no later than July 1, 2013, and every three years thereafter on or before July 1. [District Rule 4694]

15. An Annual Compliance Plan Demonstration that shows compliance with the applicable requirements of this rule shall be submitted to the District by no later than February 1, 2012, and every year thereafter on or before February 1. [District Rule 4694]

16. Operators using CER to mitigate fermentation emissions shall perform all monitoring and recordkeeping, as established in their approved Three-Year Compliance Plan, and shall maintain all records necessary to demonstrate compliance. [District Rule 4694]

17. Operators using District Obtained Emission Reductions (DOER) shall submit payment of DOER and administrative fees to the District no later than March 1, of the first year in the applicable compliance period. [District Rule 4694]

18. For each batch of must fermented in this tank, the operator shall record the fermentation completion date, the total gallons of must fermented, the average fermentation temperature and the uncontrolled fermentation emissions and fermentation emission reductions (calculated per the emission factors given in District Rule 4694). The information shall be recorded by the tank Permit to Operate number and by wine type, stated as either red wine or white wine. [District Rules 2201 and 4694]

19. When used for wine storage, daily throughput records, including records of filling and emptying operations, the dates of such operations, a unique identifier for each batch, the volume percent ethanol in the batch, and the volume of wine transferred, shall be maintained. [District Rules 2201 and 4694]

20. When used for wine storage, the operator shall record, on a weekly basis, the total gallons of wine contained in the tank and the maximum temperature of the stored wine. [District Rule 4694]

21. Records of total annual fermentation and total annual storage emissions, including calculation methods and parameters used, shall be maintained. [District Rule 1070 and 2201]

22. Separate annual records of total red wine and total white wine produced by fermentation at this facility, based on values reported to the Alcohol and Tobacco Tax and Trade Bureau (TTB), U.S. Department of the Treasury, shall be maintained. [District Rule 1070 and 2201]

DRAFT

CONDITIONS CONTINUE ON NEXT PAGE

23. All records shall be retained on-site for a period of at least five years and made available for District inspection upon request. [District Rules 2201 and 4694]

DRAFT

San Joaquin Valley
Air Pollution Control District

AUTHORITY TO CONSTRUCT

DRAFT

PERMIT NO: N-7855-732-0 **ISSUANCE DATE:** DRAFT

LEGAL OWNER OR OPERATOR: SUTTER HOME WINERY
MAILING ADDRESS: P O BOX 248
ST HELENA, CA 94574-0248

LOCATION: 18667 N JACOB BRACK RD
LODI, CA 95242

EQUIPMENT DESCRIPTION:
202,000 GALLON WHITE WINE FERMENTATION TANK AND WINE STORAGE TANK (TANK 1412) WITH PRESSURE/VACUUM VALVE AND INSULATION

CONDITIONS

1. {98} No air contaminant shall be released into the atmosphere which causes a public nuisance. [District Rule 4102]
2. The VOC emissions rate for fermentation operations in this tank shall not exceed 1.62 lb/day per 1000 gallons of tank capacity. [District Rule 2201]
3. The ethanol content of wine stored in this tank shall not exceed 23.9 percent by volume. [District Rule 2201]
4. When this tank is used for wine storage, the daily tank throughput, in gallons, shall not exceed five times the maximum nominal tank capacity stated on the equipment description. [District Rule 2201]
5. Total combined annual VOC emissions from all wine fermentation and wine storage operations at this facility shall not exceed 292,950 lb. [District Rule 2201]
6. Combined annual VOC emissions from all wine storage operations shall be determined as the sum of the emissions for each individual wine movement based on the volume transferred in each wine movement and the batch-specific wine storage emission factor calculated using the equation(s) specified within this permit. [District Rule 2201]
7. The annual VOC wine storage emission factor (EF) for each wine transfer shall be selected from the following emission factors based on the ethanol content of the wine transferred: For wine with ethanol content less than 14 volume percent: EF = 0.198 lb-VOC/1000 gallons; For wine with ethanol content between 14 and 21 volume percent, EF = 0.314 lb-VOC/1000 gallons; For wine with ethanol content greater than 21 volume percent, EF = 0.363 lb-VOC/1000 gallon. [District Rule 2201]

CONDITIONS CONTINUE ON NEXT PAGE

YOU MUST NOTIFY THE DISTRICT COMPLIANCE DIVISION AT (209) 557-6400 WHEN CONSTRUCTION IS COMPLETED AND PRIOR TO OPERATING THE EQUIPMENT OR MODIFICATIONS AUTHORIZED BY THIS AUTHORITY TO CONSTRUCT. This is NOT a PERMIT TO OPERATE. Approval or denial of a PERMIT TO OPERATE will be made after an inspection to verify that the equipment has been constructed in accordance with the approved plans, specifications and conditions of this Authority to Construct, and to determine if the equipment can be operated in compliance with all Rules and Regulations of the San Joaquin Valley Unified Air Pollution Control District. Unless construction has commenced pursuant to Rule 2050, this Authority to Construct shall expire and application shall be cancelled two years from the date of issuance. The applicant is responsible for complying with all laws, ordinances and regulations of all other governmental agencies which may pertain to the above equipment.

Seyed Sadredin, Executive Director / APCO

DRAFT

DAVID WARNER, Director of Permit Services
N-7855-732-0 : Mar 23 2011 1:27PM – ROBERTSD : Joint Inspection NOT Required

8. Total annual VOC emissions from wine fermentation operations shall be determined by the following formula: Total annual VOC emissions = (Total Annual Red Wine Production-gal) x (6.2 lb-VOC/1000 gal) + (Total Annual White Wine Production-gal) x (2.5 lb-VOC/1000 gal). [District Rule 2201]

9. When used for wine storage, this tank shall be equipped with and operated with a pressure-vacuum relief valve, which shall operate within 10% of the maximum allowable working pressure of the tank, operate in accordance with the manufacturer's instructions, and be permanently labeled with the operating pressure settings. [District Rules 2201 and 4694]

10. When used for wine storage, the pressure-vacuum relief valve and storage tank shall remain in a gas-tight condition, except when the operating pressure of the tank exceeds the valve set pressure. A gas-tight condition shall be determined by measuring the gas leak in accordance with the procedures in EPA Method 21. [District Rules 2201 and 4694]

11. The temperature of the wine stored in this tank shall be maintained at or below 75 degrees Fahrenheit. For each batch of wine, the operator shall achieve the storage temperature of 75 degrees Fahrenheit or less within 60 days after completing fermentation, and shall maintain records to show when the required storage temperature of 75 degrees Fahrenheit or less was achieved. [District Rules 2201 and 4694]

12. The average fermentation temperature of each batch of must fermented in this tank shall not exceed 95 oF, calculated as the average of all temperature measurements for the batch taken at least every 12 hours over the course of the fermentation. [District Rule 2201]

13. A Three-Year Compliance Plan that demonstrates compliance with the requirements of Section 5.1 of District Rule 4694 for each year of the applicable compliance period shall be submitted to the District by no later than December 1, 2012, and every three years thereafter on or before December 1. [District Rule 4694]

14. A Three-Year Compliance Plan Verification that demonstrates that the Three-Year Compliance Plan elements are in effect shall be submitted to the District by no later than July 1, 2013, and every three years thereafter on or before July 1. [District Rule 4694]

15. An Annual Compliance Plan Demonstration that shows compliance with the applicable requirements of this rule shall be submitted to the District by no later than February 1, 2012, and every year thereafter on or before February 1. [District Rule 4694]

16. Operators using CER to mitigate fermentation emissions shall perform all monitoring and recordkeeping, as established in their approved Three-Year Compliance Plan, and shall maintain all records necessary to demonstrate compliance. [District Rule 4694]

17. Operators using District Obtained Emission Reductions (DOER) shall submit payment of DOER and administrative fees to the District no later than March 1, of the first year in the applicable compliance period. [District Rule 4694]

18. For each batch of must fermented in this tank, the operator shall record the fermentation completion date, the total gallons of must fermented, the average fermentation temperature and the uncontrolled fermentation emissions and fermentation emission reductions (calculated per the emission factors given in District Rule 4694). The information shall be recorded by the tank Permit to Operate number and by wine type, stated as either red wine or white wine. [District Rules 2201 and 4694]

19. When used for wine storage, daily throughput records, including records of filling and emptying operations, the dates of such operations, a unique identifier for each batch, the volume percent ethanol in the batch, and the volume of wine transferred, shall be maintained. [District Rules 2201 and 4694]

20. When used for wine storage, the operator shall record, on a weekly basis, the total gallons of wine contained in the tank and the maximum temperature of the stored wine. [District Rule 4694]

21. Records of total annual fermentation and total annual storage emissions, including calculation methods and parameters used, shall be maintained. [District Rule 1070 and 2201]

22. Separate annual records of total red wine and total white wine produced by fermentation at this facility, based on values reported to the Alcohol and Tobacco Tax and Trade Bureau (TTB), U.S. Department of the Treasury, shall be maintained. [District Rule 1070 and 2201]

DRAFT

CONDITIONS CONTINUE ON NEXT PAGE

23. All records shall be retained on-site for a period of at least five years and made available for District inspection upon request. [District Rules 2201 and 4694]

DRAFT

San Joaquin Valley
Air Pollution Control District

AUTHORITY TO CONSTRUCT

DRAFT

PERMIT NO: N-7855-733-0

ISSUANCE DATE: DRAFT

LEGAL OWNER OR OPERATOR: SUTTER HOME WINERY
MAILING ADDRESS: P O BOX 248
ST HELENA, CA 94574-0248

LOCATION: 18667 N JACOB BRACK RD
LODI, CA 95242

EQUIPMENT DESCRIPTION:
202,000 GALLON WHITE WINE FERMENTATION TANK AND WINE STORAGE TANK (TANK 1413) WITH PRESSURE/VACUUM VALVE AND INSULATION

CONDITIONS

1. {98} No air contaminant shall be released into the atmosphere which causes a public nuisance. [District Rule 4102]
2. The VOC emissions rate for fermentation operations in this tank shall not exceed 1.62 lb/day per 1000 gallons of tank capacity. [District Rule 2201]
3. The ethanol content of wine stored in this tank shall not exceed 23.9 percent by volume. [District Rule 2201]
4. When this tank is used for wine storage, the daily tank throughput, in gallons, shall not exceed five times the maximum nominal tank capacity stated on the equipment description. [District Rule 2201]
5. Total combined annual VOC emissions from all wine fermentation and wine storage operations at this facility shall not exceed 292,950 lb. [District Rule 2201]
6. Combined annual VOC emissions from all wine storage operations shall be determined as the sum of the emissions for each individual wine movement based on the volume transferred in each wine movement and the batch-specific wine storage emission factor calculated using the equation(s) specified within this permit. [District Rule 2201]
7. The annual VOC wine storage emission factor (EF) for each wine transfer shall be selected from the following emission factors based on the ethanol content of the wine transferred: For wine with ethanol content less than 14 volume percent: EF = 0.198 lb-VOC/1000 gallons; For wine with ethanol content between 14 and 21 volume percent, EF = 0.314 lb-VOC/1000 gallons; For wine with ethanol content greater than 21 volume percent, EF = 0.363 lb-VOC/1000 gallon. [District Rule 2201]

CONDITIONS CONTINUE ON NEXT PAGE

YOU MUST NOTIFY THE DISTRICT COMPLIANCE DIVISION AT (209) 557-6400 WHEN CONSTRUCTION IS COMPLETED AND PRIOR TO OPERATING THE EQUIPMENT OR MODIFICATIONS AUTHORIZED BY THIS AUTHORITY TO CONSTRUCT. This is NOT a PERMIT TO OPERATE. Approval or denial of a PERMIT TO OPERATE will be made after an inspection to verify that the equipment has been constructed in accordance with the approved plans, specifications and conditions of this Authority to Construct, and to determine if the equipment can be operated in compliance with all Rules and Regulations of the San Joaquin Valley Unified Air Pollution Control District. Unless construction has commenced pursuant to Rule 2050, this Authority to Construct shall expire and application shall be cancelled two years from the date of issuance. The applicant is responsible for complying with all laws, ordinances and regulations of all other governmental agencies which may pertain to the above equipment.

Seyed Sadredin, Executive Director / APCO

DRAFT

DAVID WARNER, Director of Permit Services
N-7855-733-0 : Mar 23 2011 1:27PM -- ROBERTSD : Joint Inspection NOT Required

8. Total annual VOC emissions from wine fermentation operations shall be determined by the following formula: Total annual VOC emissions = (Total Annual Red Wine Production-gal) x (6.2 lb-VOC/1000 gal) + (Total Annual White Wine Production-gal) x (2.5 lb-VOC/1000 gal). [District Rule 2201]

9. When used for wine storage, this tank shall be equipped with and operated with a pressure-vacuum relief valve, which shall operate within 10% of the maximum allowable working pressure of the tank, operate in accordance with the manufacturer's instructions, and be permanently labeled with the operating pressure settings. [District Rules 2201 and 4694]

10. When used for wine storage, the pressure-vacuum relief valve and storage tank shall remain in a gas-tight condition, except when the operating pressure of the tank exceeds the valve set pressure. A gas-tight condition shall be determined by measuring the gas leak in accordance with the procedures in EPA Method 21. [District Rules 2201 and 4694]

11. The temperature of the wine stored in this tank shall be maintained at or below 75 degrees Fahrenheit. For each batch of wine, the operator shall achieve the storage temperature of 75 degrees Fahrenheit or less within 60 days after completing fermentation, and shall maintain records to show when the required storage temperature of 75 degrees Fahrenheit or less was achieved. [District Rules 2201 and 4694]

12. The average fermentation temperature of each batch of must fermented in this tank shall not exceed 95 oF, calculated as the average of all temperature measurements for the batch taken at least every 12 hours over the course of the fermentation. [District Rule 2201]

13. A Three-Year Compliance Plan that demonstrates compliance with the requirements of Section 5.1 of District Rule 4694 for each year of the applicable compliance period shall be submitted to the District by no later than December 1, 2012, and every three years thereafter on or before December 1. [District Rule 4694]

14. A Three-Year Compliance Plan Verification that demonstrates that the Three-Year Compliance Plan elements are in effect shall be submitted to the District by no later than July 1, 2013, and every three years thereafter on or before July 1. [District Rule 4694]

15. An Annual Compliance Plan Demonstration that shows compliance with the applicable requirements of this rule shall be submitted to the District by no later than February 1, 2012, and every year thereafter on or before February 1. [District Rule 4694]

16. Operators using CER to mitigate fermentation emissions shall perform all monitoring and recordkeeping, as established in their approved Three-Year Compliance Plan, and shall maintain all records necessary to demonstrate compliance. [District Rule 4694]

17. Operators using District Obtained Emission Reductions (DOER) shall submit payment of DOER and administrative fees to the District no later than March 1, of the first year in the applicable compliance period. [District Rule 4694]

18. For each batch of must fermented in this tank, the operator shall record the fermentation completion date, the total gallons of must fermented, the average fermentation temperature and the uncontrolled fermentation emissions and fermentation emission reductions (calculated per the emission factors given in District Rule 4694). The information shall be recorded by the tank Permit to Operate number and by wine type, stated as either red wine or white wine. [District Rules 2201 and 4694]

19. When used for wine storage, daily throughput records, including records of filling and emptying operations, the dates of such operations, a unique identifier for each batch, the volume percent ethanol in the batch, and the volume of wine transferred, shall be maintained. [District Rules 2201 and 4694]

20. When used for wine storage, the operator shall record, on a weekly basis, the total gallons of wine contained in the tank and the maximum temperature of the stored wine. [District Rule 4694]

21. Records of total annual fermentation and total annual storage emissions, including calculation methods and parameters used, shall be maintained. [District Rule 1070 and 2201]

22. Separate annual records of total red wine and total white wine produced by fermentation at this facility, based on values reported to the Alcohol and Tobacco Tax and Trade Bureau (TTB), U.S. Department of the Treasury, shall be maintained. [District Rule 1070 and 2201]

DRAFT

CONDITIONS CONTINUE ON NEXT PAGE

23. All records shall be retained on-site for a period of at least five years and made available for District inspection upon request. [District Rules 2201 and 4694]

DRAFT

San Joaquin Valley
Air Pollution Control District

AUTHORITY TO CONSTRUCT

DRAFT

PERMIT NO: N-7855-734-0 **ISSUANCE DATE:** DRAFT

LEGAL OWNER OR OPERATOR: SUTTER HOME WINERY
MAILING ADDRESS: P O BOX 248
ST HELENA, CA 94574-0248

LOCATION: 18667 N JACOB BRACK RD
LODI, CA 95242

EQUIPMENT DESCRIPTION:
202,000 GALLON WHITE WINE FERMENTATION TANK AND WINE STORAGE TANK (TANK 1414) WITH PRESSURE/VACUUM VALVE AND INSULATION

CONDITIONS

1. {98} No air contaminant shall be released into the atmosphere which causes a public nuisance. [District Rule 4102]
2. The VOC emissions rate for fermentation operations in this tank shall not exceed 1.62 lb/day per 1000 gallons of tank capacity. [District Rule 2201]
3. The ethanol content of wine stored in this tank shall not exceed 23.9 percent by volume. [District Rule 2201]
4. When this tank is used for wine storage, the daily tank throughput, in gallons, shall not exceed five times the maximum nominal tank capacity stated on the equipment description. [District Rule 2201]
5. Total combined annual VOC emissions from all wine fermentation and wine storage operations at this facility shall not exceed 292,950 lb. [District Rule 2201]
6. Combined annual VOC emissions from all wine storage operations shall be determined as the sum of the emissions for each individual wine movement based on the volume transferred in each wine movement and the batch-specific wine storage emission factor calculated using the equation(s) specified within this permit. [District Rule 2201]
7. The annual VOC wine storage emission factor (EF) for each wine transfer shall be selected from the following emission factors based on the ethanol content of the wine transferred: For wine with ethanol content less than 14 volume percent: EF = 0.198 lb-VOC/1000 gallons; For wine with ethanol content between 14 and 21 volume percent, EF = 0.314 lb-VOC/1000 gallons; For wine with ethanol content greater than 21 volume percent, EF = 0.363 lb-VOC/1000 gallon. [District Rule 2201]

CONDITIONS CONTINUE ON NEXT PAGE

YOU MUST NOTIFY THE DISTRICT COMPLIANCE DIVISION AT (209) 557-6400 WHEN CONSTRUCTION IS COMPLETED AND PRIOR TO OPERATING THE EQUIPMENT OR MODIFICATIONS AUTHORIZED BY THIS AUTHORITY TO CONSTRUCT. This is NOT a PERMIT TO OPERATE. Approval or denial of a PERMIT TO OPERATE will be made after an inspection to verify that the equipment has been constructed in accordance with the approved plans, specifications and conditions of this Authority to Construct, and to determine if the equipment can be operated in compliance with all Rules and Regulations of the San Joaquin Valley Unified Air Pollution Control District. Unless construction has commenced pursuant to Rule 2050, this Authority to Construct shall expire and application shall be cancelled two years from the date of issuance. The applicant is responsible for complying with all laws, ordinances and regulations of all other governmental agencies which may pertain to the above equipment.

Seyed Sadredin, Executive Director / APCO

DRAFT

DAVID WARNER, Director of Permit Services
N-7855-734-0 : Mar 23 2011 1:27PM -- ROBERTSD : Joint Inspection NOT Required

8. Total annual VOC emissions from wine fermentation operations shall be determined by the following formula: Total annual VOC emissions = (Total Annual Red Wine Production-gal) x (6.2 lb-VOC/1000 gal) + (Total Annual White Wine Production-gal) x (2.5 lb-VOC/1000 gal). [District Rule 2201]

9. When used for wine storage, this tank shall be equipped with and operated with a pressure-vacuum relief valve, which shall operate within 10% of the maximum allowable working pressure of the tank, operate in accordance with the manufacturer's instructions, and be permanently labeled with the operating pressure settings. [District Rules 2201 and 4694]

10. When used for wine storage, the pressure-vacuum relief valve and storage tank shall remain in a gas-tight condition, except when the operating pressure of the tank exceeds the valve set pressure. A gas-tight condition shall be determined by measuring the gas leak in accordance with the procedures in EPA Method 21. [District Rules 2201 and 4694].

11. The temperature of the wine stored in this tank shall be maintained at or below 75 degrees Fahrenheit. For each batch of wine, the operator shall achieve the storage temperature of 75 degrees Fahrenheit or less within 60 days after completing fermentation, and shall maintain records to show when the required storage temperature of 75 degrees Fahrenheit or less was achieved. [District Rules 2201 and 4694]

12. The average fermentation temperature of each batch of must fermented in this tank shall not exceed 95 oF, calculated as the average of all temperature measurements for the batch taken at least every 12 hours over the course of the fermentation. [District Rule 2201]

13. A Three-Year Compliance Plan that demonstrates compliance with the requirements of Section 5.1 of District Rule 4694 for each year of the applicable compliance period shall be submitted to the District by no later than December 1, 2012, and every three years thereafter on or before December 1. [District Rule 4694]

14. A Three-Year Compliance Plan Verification that demonstrates that the Three-Year Compliance Plan elements are in effect shall be submitted to the District by no later than July 1, 2013, and every three years thereafter on or before July 1. [District Rule 4694]

15. An Annual Compliance Plan Demonstration that shows compliance with the applicable requirements of this rule shall be submitted to the District by no later than February 1, 2012, and every year thereafter on or before February 1. [District Rule 4694]

16. Operators using CER to mitigate fermentation emissions shall perform all monitoring and recordkeeping, as established in their approved Three-Year Compliance Plan, and shall maintain all records necessary to demonstrate compliance. [District Rule 4694]

17. Operators using District Obtained Emission Reductions (DOER) shall submit payment of DOER and administrative fees to the District no later than March 1, of the first year in the applicable compliance period. [District Rule 4694]

18. For each batch of must fermented in this tank, the operator shall record the fermentation completion date, the total gallons of must fermented, the average fermentation temperature and the uncontrolled fermentation emissions and fermentation emission reductions (calculated per the emission factors given in District Rule 4694). The information shall be recorded by the tank Permit to Operate number and by wine type, stated as either red wine or white wine. [District Rules 2201 and 4694]

19. When used for wine storage, daily throughput records, including records of filling and emptying operations, the dates of such operations, a unique identifier for each batch, the volume percent ethanol in the batch, and the volume of wine transferred, shall be maintained. [District Rules 2201 and 4694]

20. When used for wine storage, the operator shall record, on a weekly basis, the total gallons of wine contained in the tank and the maximum temperature of the stored wine. [District Rule 4694]

21. Records of total annual fermentation and total annual storage emissions, including calculation methods and parameters used, shall be maintained. [District Rule 1070 and 2201]

22. Separate annual records of total red wine and total white wine produced by fermentation at this facility, based on values reported to the Alcohol and Tobacco Tax and Trade Bureau (TTB), U.S. Department of the Treasury, shall be maintained. [District Rule 1070 and 2201]

DRAFT

CONDITIONS CONTINUE ON NEXT PAGE

23. All records shall be retained on-site for a period of at least five years and made available for District inspection upon request. [District Rules 2201 and 4694]

DRAFT

San Joaquin Valley
Air Pollution Control District

AUTHORITY TO CONSTRUCT

DRAFT

PERMIT NO: N-7855-735-0 **ISSUANCE DATE:** DRAFT

LEGAL OWNER OR OPERATOR: SUTTER HOME WINERY
MAILING ADDRESS: P O BOX 248
ST HELENA, CA 94574-0248

LOCATION: 18667 N JACOB BRACK RD
LODI, CA 95242

EQUIPMENT DESCRIPTION:
202,000 GALLON WHITE WINE FERMENTATION TANK AND WINE STORAGE TANK (TANK 1415) WITH PRESSURE/VACUUM VALVE AND INSULATION

CONDITIONS

1. {98} No air contaminant shall be released into the atmosphere which causes a public nuisance. [District Rule 4102]
2. The VOC emissions rate for fermentation operations in this tank shall not exceed 1.62 lb/day per 1000 gallons of tank capacity. [District Rule 2201]
3. The ethanol content of wine stored in this tank shall not exceed 23.9 percent by volume. [District Rule 2201]
4. When this tank is used for wine storage, the daily tank throughput, in gallons, shall not exceed five times the maximum nominal tank capacity stated on the equipment description. [District Rule 2201]
5. Total combined annual VOC emissions from all wine fermentation and wine storage operations at this facility shall not exceed 292,950 lb. [District Rule 2201]
6. Combined annual VOC emissions from all wine storage operations shall be determined as the sum of the emissions for each individual wine movement based on the volume transferred in each wine movement and the batch-specific wine storage emission factor calculated using the equation(s) specified within this permit. [District Rule 2201]
7. The annual VOC wine storage emission factor (EF) for each wine transfer shall be selected from the following emission factors based on the ethanol content of the wine transferred: For wine with ethanol content less than 14 volume percent: EF = 0.198 lb-VOC/1000 gallons; For wine with ethanol content between 14 and 21 volume percent, EF = 0.314 lb-VOC/1000 gallons; For wine with ethanol content greater than 21 volume percent, EF = 0.363 lb-VOC/1000 gallon. [District Rule 2201]

CONDITIONS CONTINUE ON NEXT PAGE

YOU MUST NOTIFY THE DISTRICT COMPLIANCE DIVISION AT (209) 557-6400 WHEN CONSTRUCTION IS COMPLETED AND PRIOR TO OPERATING THE EQUIPMENT OR MODIFICATIONS AUTHORIZED BY THIS AUTHORITY TO CONSTRUCT. This is NOT a PERMIT TO OPERATE. Approval or denial of a PERMIT TO OPERATE will be made after an inspection to verify that the equipment has been constructed in accordance with the approved plans, specifications and conditions of this Authority to Construct, and to determine if the equipment can be operated in compliance with all Rules and Regulations of the San Joaquin Valley Unified Air Pollution Control District. Unless construction has commenced pursuant to Rule 2050, this Authority to Construct shall expire and application shall be cancelled two years from the date of issuance. The applicant is responsible for complying with all laws, ordinances and regulations of all other governmental agencies which may pertain to the above equipment.

Seyed Sadredin, Executive Director / APCO

DRAFT

DAVID WARNER, Director of Permit Services
N-7855-735-0 : Mar 23 2011 1:27PM -- ROBERTSD : Joint Inspection NOT Required

8. Total annual VOC emissions from wine fermentation operations shall be determined by the following formula: Total annual VOC emissions = (Total Annual Red Wine Production-gal) x (6.2 lb-VOC/1000 gal) + (Total Annual White Wine Production-gal) x (2.5 lb-VOC/1000 gal). [District Rule 2201]

9. When used for wine storage, this tank shall be equipped with and operated with a pressure-vacuum relief valve, which shall operate within 10% of the maximum allowable working pressure of the tank, operate in accordance with the manufacturer's instructions, and be permanently labeled with the operating pressure settings. [District Rules 2201 and 4694]

10. When used for wine storage, the pressure-vacuum relief valve and storage tank shall remain in a gas-tight condition, except when the operating pressure of the tank exceeds the valve set pressure. A gas-tight condition shall be determined by measuring the gas leak in accordance with the procedures in EPA Method 21. [District Rules 2201 and 4694]

11. The temperature of the wine stored in this tank shall be maintained at or below 75 degrees Fahrenheit. For each batch of wine, the operator shall achieve the storage temperature of 75 degrees Fahrenheit or less within 60 days after completing fermentation, and shall maintain records to show when the required storage temperature of 75 degrees Fahrenheit or less was achieved. [District Rules 2201 and 4694]

12. The average fermentation temperature of each batch of must fermented in this tank shall not exceed 95 oF, calculated as the average of all temperature measurements for the batch taken at least every 12 hours over the course of the fermentation. [District Rule 2201]

13. A Three-Year Compliance Plan that demonstrates compliance with the requirements of Section 5.1 of District Rule 4694 for each year of the applicable compliance period shall be submitted to the District by no later than December 1, 2012, and every three years thereafter on or before December 1. [District Rule 4694]

14. A Three-Year Compliance Plan Verification that demonstrates that the Three-Year Compliance Plan elements are in effect shall be submitted to the District by no later than July 1, 2013, and every three years thereafter on or before July 1. [District Rule 4694]

15. An Annual Compliance Plan Demonstration that shows compliance with the applicable requirements of this rule shall be submitted to the District by no later than February 1, 2012, and every year thereafter on or before February 1. [District Rule 4694]

16. Operators using CER to mitigate fermentation emissions shall perform all monitoring and recordkeeping, as established in their approved Three-Year Compliance Plan, and shall maintain all records necessary to demonstrate compliance. [District Rule 4694]

17. Operators using District Obtained Emission Reductions (DOER) shall submit payment of DOER and administrative fees to the District no later than March 1, of the first year in the applicable compliance period. [District Rule 4694]

18. For each batch of must fermented in this tank, the operator shall record the fermentation completion date, the total gallons of must fermented, the average fermentation temperature and the uncontrolled fermentation emissions and fermentation emission reductions (calculated per the emission factors given in District Rule 4694). The information shall be recorded by the tank Permit to Operate number and by wine type, stated as either red wine or white wine. [District Rules 2201 and 4694]

19. When used for wine storage, daily throughput records, including records of filling and emptying operations, the dates of such operations, a unique identifier for each batch, the volume percent ethanol in the batch, and the volume of wine transferred, shall be maintained. [District Rules 2201 and 4694]

20. When used for wine storage, the operator shall record, on a weekly basis, the total gallons of wine contained in the tank and the maximum temperature of the stored wine. [District Rule 4694]

21. Records of total annual fermentation and total annual storage emissions, including calculation methods and parameters used, shall be maintained. [District Rule 1070 and 2201]

22. Separate annual records of total red wine and total white wine produced by fermentation at this facility, based on values reported to the Alcohol and Tobacco Tax and Trade Bureau (TTB), U.S. Department of the Treasury, shall be maintained. [District Rule 1070 and 2201]

DRAFT

CONDITIONS CONTINUE ON NEXT PAGE

23. All records shall be retained on-site for a period of at least five years and made available for District inspection upon request. [District Rules 2201 and 4694]

DRAFT

San Joaquin Valley
Air Pollution Control District

AUTHORITY TO CONSTRUCT

DRAFT

PERMIT NO: N-7855-736-0 **ISSUANCE DATE:** DRAFT

LEGAL OWNER OR OPERATOR: SUTTER HOME WINERY
MAILING ADDRESS: P O BOX 248
ST HELENA, CA 94574-0248

LOCATION: 18667 N JACOB BRACK RD
LODI, CA 95242

EQUIPMENT DESCRIPTION:
202,000 GALLON WHITE WINE FERMENTATION TANK AND WINE STORAGE TANK (TANK 1416) WITH PRESSURE/VACUUM VALVE AND INSULATION

CONDITIONS

1. {98} No air contaminant shall be released into the atmosphere which causes a public nuisance. [District Rule 4102]
2. The VOC emissions rate for fermentation operations in this tank shall not exceed 1.62 lb/day per 1000 gallons of tank capacity. [District Rule 2201]
3. The ethanol content of wine stored in this tank shall not exceed 23.9 percent by volume. [District Rule 2201]
4. When this tank is used for wine storage, the daily tank throughput, in gallons, shall not exceed five times the maximum nominal tank capacity stated on the equipment description. [District Rule 2201]
5. Total combined annual VOC emissions from all wine fermentation and wine storage operations at this facility shall not exceed 292,950 lb. [District Rule 2201]
6. Combined annual VOC emissions from all wine storage operations shall be determined as the sum of the emissions for each individual wine movement based on the volume transferred in each wine movement and the batch-specific wine storage emission factor calculated using the equation(s) specified within this permit. [District Rule 2201]
7. The annual VOC wine storage emission factor (EF) for each wine transfer shall be selected from the following emission factors based on the ethanol content of the wine transferred: For wine with ethanol content less than 14 volume percent: EF = 0.198 lb-VOC/1000 gallons; For wine with ethanol content between 14 and 21 volume percent, EF = 0.314 lb-VOC/1000 gallons; For wine with ethanol content greater than 21 volume percent, EF = 0.363 lb-VOC/1000 gallon. [District Rule 2201]

CONDITIONS CONTINUE ON NEXT PAGE

YOU MUST NOTIFY THE DISTRICT COMPLIANCE DIVISION AT (209) 557-6400 WHEN CONSTRUCTION IS COMPLETED AND PRIOR TO OPERATING THE EQUIPMENT OR MODIFICATIONS AUTHORIZED BY THIS AUTHORITY TO CONSTRUCT. This is NOT a PERMIT TO OPERATE. Approval or denial of a PERMIT TO OPERATE will be made after an inspection to verify that the equipment has been constructed in accordance with the approved plans, specifications and conditions of this Authority to Construct, and to determine if the equipment can be operated in compliance with all Rules and Regulations of the San Joaquin Valley Unified Air Pollution Control District. Unless construction has commenced pursuant to Rule 2050, this Authority to Construct shall expire and application shall be cancelled two years from the date of issuance. The applicant is responsible for complying with all laws, ordinances and regulations of all other governmental agencies which may pertain to the above equipment.

Seyed Sadredin, Executive Director / APCO

DRAFT

DAVID WARNER, Director of Permit Services
N-7855-736-0 : Mar 23 2011 1:27PM -- ROBERTSD : Joint Inspection NOT Required

8. Total annual VOC emissions from wine fermentation operations shall be determined by the following formula: Total annual VOC emissions = (Total Annual Red Wine Production-gal) x (6.2 lb-VOC/1000 gal) + (Total Annual White Wine Production-gal) x (2.5 lb-VOC/1000 gal). [District Rule 2201]

9. When used for wine storage, this tank shall be equipped with and operated with a pressure-vacuum relief valve, which shall operate within 10% of the maximum allowable working pressure of the tank, operate in accordance with the manufacturer's instructions, and be permanently labeled with the operating pressure settings. [District Rules 2201 and 4694]

10. When used for wine storage, the pressure-vacuum relief valve and storage tank shall remain in a gas-tight condition, except when the operating pressure of the tank exceeds the valve set pressure. A gas-tight condition shall be determined by measuring the gas leak in accordance with the procedures in EPA Method 21. [District Rules 2201 and 4694]

11. The temperature of the wine stored in this tank shall be maintained at or below 75 degrees Fahrenheit. For each batch of wine, the operator shall achieve the storage temperature of 75 degrees Fahrenheit or less within 60 days after completing fermentation, and shall maintain records to show when the required storage temperature of 75 degrees Fahrenheit or less was achieved. [District Rules 2201 and 4694]

12. The average fermentation temperature of each batch of must fermented in this tank shall not exceed 95 oF, calculated as the average of all temperature measurements for the batch taken at least every 12 hours over the course of the fermentation. [District Rule 2201]

13. A Three-Year Compliance Plan that demonstrates compliance with the requirements of Section 5.1 of District Rule 4694 for each year of the applicable compliance period shall be submitted to the District by no later than December 1, 2012, and every three years thereafter on or before December 1. [District Rule 4694]

14. A Three-Year Compliance Plan Verification that demonstrates that the Three-Year Compliance Plan elements are in effect shall be submitted to the District by no later than July 1, 2013, and every three years thereafter on or before July 1. [District Rule 4694]

15. An Annual Compliance Plan Demonstration that shows compliance with the applicable requirements of this rule shall be submitted to the District by no later than February 1, 2012, and every year thereafter on or before February 1. [District Rule 4694]

16. Operators using CER to mitigate fermentation emissions shall perform all monitoring and recordkeeping, as established in their approved Three-Year Compliance Plan, and shall maintain all records necessary to demonstrate compliance. [District Rule 4694]

17. Operators using District Obtained Emission Reductions (DOER) shall submit payment of DOER and administrative fees to the District no later than March 1, of the first year in the applicable compliance period. [District Rule 4694]

18. For each batch of must fermented in this tank, the operator shall record the fermentation completion date, the total gallons of must fermented, the average fermentation temperature and the uncontrolled fermentation emissions and fermentation emission reductions (calculated per the emission factors given in District Rule 4694). The information shall be recorded by the tank Permit to Operate number and by wine type, stated as either red wine or white wine. [District Rules 2201 and 4694]

19. When used for wine storage, daily throughput records, including records of filling and emptying operations, the dates of such operations, a unique identifier for each batch, the volume percent ethanol in the batch, and the volume of wine transferred, shall be maintained. [District Rules 2201 and 4694]

20. When used for wine storage, the operator shall record, on a weekly basis, the total gallons of wine contained in the tank and the maximum temperature of the stored wine. [District Rule 4694]

21. Records of total annual fermentation and total annual storage emissions, including calculation methods and parameters used, shall be maintained. [District Rule 1070 and 2201]

22. Separate annual records of total red wine and total white wine produced by fermentation at this facility, based on values reported to the Alcohol and Tobacco Tax and Trade Bureau (TTB), U.S. Department of the Treasury, shall be maintained. [District Rule 1070 and 2201]

DRAFT

CONDITIONS CONTINUE ON NEXT PAGE

23. All records shall be retained on-site for a period of at least five years and made available for District inspection upon request. [District Rules 2201 and 4694]

DRAFT

San Joaquin Valley
Air Pollution Control District

AUTHORITY TO CONSTRUCT

DRAFT

PERMIT NO: N-7855-737-0 **ISSUANCE DATE:** DRAFT

LEGAL OWNER OR OPERATOR: SUTTER HOME WINERY
MAILING ADDRESS: P O BOX 248
ST HELENA, CA 94574-0248

LOCATION: 18667 N JACOB BRACK RD
LODI, CA 95242

EQUIPMENT DESCRIPTION:
202,000 GALLON WHITE WINE FERMENTATION TANK AND WINE STORAGE TANK (TANK 1417) WITH PRESSURE/VACUUM VALVE AND INSULATION

CONDITIONS

1. {98} No air contaminant shall be released into the atmosphere which causes a public nuisance. [District Rule 4102]
2. The VOC emissions rate for fermentation operations in this tank shall not exceed 1.62 lb/day per 1000 gallons of tank capacity. [District Rule 2201]
3. The ethanol content of wine stored in this tank shall not exceed 23.9 percent by volume. [District Rule 2201]
4. When this tank is used for wine storage, the daily tank throughput, in gallons, shall not exceed five times the maximum nominal tank capacity stated on the equipment description. [District Rule 2201]
5. Total combined annual VOC emissions from all wine fermentation and wine storage operations at this facility shall not exceed 292,950 lb. [District Rule 2201]
6. Combined annual VOC emissions from all wine storage operations shall be determined as the sum of the emissions for each individual wine movement based on the volume transferred in each wine movement and the batch-specific wine storage emission factor calculated using the equation(s) specified within this permit. [District Rule 2201]
7. The annual VOC wine storage emission factor (EF) for each wine transfer shall be selected from the following emission factors based on the ethanol content of the wine transferred: For wine with ethanol content less than 14 volume percent: EF = 0.198 lb-VOC/1000 gallons; For wine with ethanol content between 14 and 21 volume percent, EF = 0.314 lb-VOC/1000 gallons; For wine with ethanol content greater than 21 volume percent, EF = 0.363 lb-VOC/1000 gallon. [District Rule 2201]

CONDITIONS CONTINUE ON NEXT PAGE

YOU MUST NOTIFY THE DISTRICT COMPLIANCE DIVISION AT (209) 557-6400 WHEN CONSTRUCTION IS COMPLETED AND PRIOR TO OPERATING THE EQUIPMENT OR MODIFICATIONS AUTHORIZED BY THIS AUTHORITY TO CONSTRUCT. This is NOT a PERMIT TO OPERATE. Approval or denial of a PERMIT TO OPERATE will be made after an inspection to verify that the equipment has been constructed in accordance with the approved plans, specifications and conditions of this Authority to Construct, and to determine if the equipment can be operated in compliance with all Rules and Regulations of the San Joaquin Valley Unified Air Pollution Control District. Unless construction has commenced pursuant to Rule 2050, this Authority to Construct shall expire and application shall be cancelled two years from the date of issuance. The applicant is responsible for complying with all laws, ordinances and regulations of all other governmental agencies which may pertain to the above equipment.

Seyed Sadredin, Executive Director / APCO

DRAFT

DAVID WARNER, Director of Permit Services
N-7855-737-0 : Mar 23 2011 1:27PM – ROBERTSD : Joint Inspection NOT Required

8. Total annual VOC emissions from wine fermentation operations shall be determined by the following formula: Total annual VOC emissions = (Total Annual Red Wine Production-gal) x (6.2 lb-VOC/1000 gal) + (Total Annual White Wine Production-gal) x (2.5 lb-VOC/1000 gal). [District Rule 2201]

9. When used for wine storage, this tank shall be equipped with and operated with a pressure-vacuum relief valve, which shall operate within 10% of the maximum allowable working pressure of the tank, operate in accordance with the manufacturer's instructions, and be permanently labeled with the operating pressure settings. [District Rules 2201 and 4694]

10. When used for wine storage, the pressure-vacuum relief valve and storage tank shall remain in a gas-tight condition, except when the operating pressure of the tank exceeds the valve set pressure. A gas-tight condition shall be determined by measuring the gas leak in accordance with the procedures in EPA Method 21. [District Rules 2201 and 4694]

11. The temperature of the wine stored in this tank shall be maintained at or below 75 degrees Fahrenheit. For each batch of wine, the operator shall achieve the storage temperature of 75 degrees Fahrenheit or less within 60 days after completing fermentation, and shall maintain records to show when the required storage temperature of 75 degrees Fahrenheit or less was achieved. [District Rules 2201 and 4694]

12. The average fermentation temperature of each batch of must fermented in this tank shall not exceed 95 oF, calculated as the average of all temperature measurements for the batch taken at least every 12 hours over the course of the fermentation. [District Rule 2201]

13. A Three-Year Compliance Plan that demonstrates compliance with the requirements of Section 5.1 of District Rule 4694 for each year of the applicable compliance period shall be submitted to the District by no later than December 1, 2012, and every three years thereafter on or before December 1. [District Rule 4694]

14. A Three-Year Compliance Plan Verification that demonstrates that the Three-Year Compliance Plan elements are in effect shall be submitted to the District by no later than July 1, 2013, and every three years thereafter on or before July 1. [District Rule 4694]

15. An Annual Compliance Plan Demonstration that shows compliance with the applicable requirements of this rule shall be submitted to the District by no later than February 1, 2012, and every year thereafter on or before February 1. [District Rule 4694]

16. Operators using CER to mitigate fermentation emissions shall perform all monitoring and recordkeeping, as established in their approved Three-Year Compliance Plan, and shall maintain all records necessary to demonstrate compliance. [District Rule 4694]

17. Operators using District Obtained Emission Reductions (DOER) shall submit payment of DOER and administrative fees to the District no later than March 1, of the first year in the applicable compliance period. [District Rule 4694]

18. For each batch of must fermented in this tank, the operator shall record the fermentation completion date, the total gallons of must fermented, the average fermentation temperature and the uncontrolled fermentation emissions and fermentation emission reductions (calculated per the emission factors given in District Rule 4694). The information shall be recorded by the tank Permit to Operate number and by wine type, stated as either red wine or white wine. [District Rules 2201 and 4694]

19. When used for wine storage, daily throughput records, including records of filling and emptying operations, the dates of such operations, a unique identifier for each batch, the volume percent ethanol in the batch, and the volume of wine transferred, shall be maintained. [District Rules 2201 and 4694]

20. When used for wine storage, the operator shall record, on a weekly basis, the total gallons of wine contained in the tank and the maximum temperature of the stored wine. [District Rule 4694]

21. Records of total annual fermentation and total annual storage emissions, including calculation methods and parameters used, shall be maintained. [District Rule 1070 and 2201]

22. Separate annual records of total red wine and total white wine produced by fermentation at this facility, based on values reported to the Alcohol and Tobacco Tax and Trade Bureau (TTB), U.S. Department of the Treasury, shall be maintained. [District Rule 1070 and 2201]

DRAFT

CONDITIONS CONTINUE ON NEXT PAGE

23. All records shall be retained on-site for a period of at least five years and made available for District inspection upon request. [District Rules 2201 and 4694]

DRAFT

San Joaquin Valley
Air Pollution Control District

AUTHORITY TO CONSTRUCT

DRAFT

PERMIT NO: N-7855-738-0 **ISSUANCE DATE:** DRAFT

LEGAL OWNER OR OPERATOR: SUTTER HOME WINERY
MAILING ADDRESS: P O BOX 248
ST HELENA, CA 94574-0248

LOCATION: 18667 N JACOB BRACK RD
LODI, CA 95242

EQUIPMENT DESCRIPTION:
202,000 GALLON WHITE WINE FERMENTATION TANK AND WINE STORAGE TANK (TANK 1418) WITH PRESSURE/VACUUM VALVE AND INSULATION

CONDITIONS

1. {98} No air contaminant shall be released into the atmosphere which causes a public nuisance. [District Rule 4102]
2. The VOC emissions rate for fermentation operations in this tank shall not exceed 1.62 lb/day per 1000 gallons of tank capacity. [District Rule 2201]
3. The ethanol content of wine stored in this tank shall not exceed 23.9 percent by volume. [District Rule 2201]
4. When this tank is used for wine storage, the daily tank throughput, in gallons, shall not exceed five times the maximum nominal tank capacity stated on the equipment description. [District Rule 2201]
5. Total combined annual VOC emissions from all wine fermentation and wine storage operations at this facility shall not exceed 292,950 lb. [District Rule 2201]
6. Combined annual VOC emissions from all wine storage operations shall be determined as the sum of the emissions for each individual wine movement based on the volume transferred in each wine movement and the batch-specific wine storage emission factor calculated using the equation(s) specified within this permit. [District Rule 2201]
7. The annual VOC wine storage emission factor (EF) for each wine transfer shall be selected from the following emission factors based on the ethanol content of the wine transferred: For wine with ethanol content less than 14 volume percent: EF = 0.198 lb-VOC/1000 gallons; For wine with ethanol content between 14 and 21 volume percent, EF = 0.314 lb-VOC/1000 gallons; For wine with ethanol content greater than 21 volume percent, EF = 0.363 lb-VOC/1000 gallon. [District Rule 2201]

CONDITIONS CONTINUE ON NEXT PAGE

YOU MUST NOTIFY THE DISTRICT COMPLIANCE DIVISION AT (209) 557-6400 WHEN CONSTRUCTION IS COMPLETED AND PRIOR TO OPERATING THE EQUIPMENT OR MODIFICATIONS AUTHORIZED BY THIS AUTHORITY TO CONSTRUCT. This is NOT a PERMIT TO OPERATE. Approval or denial of a PERMIT TO OPERATE will be made after an inspection to verify that the equipment has been constructed in accordance with the approved plans, specifications and conditions of this Authority to Construct, and to determine if the equipment can be operated in compliance with all Rules and Regulations of the San Joaquin Valley Unified Air Pollution Control District. Unless construction has commenced pursuant to Rule 2050, this Authority to Construct shall expire and application shall be cancelled two years from the date of issuance. The applicant is responsible for complying with all laws, ordinances and regulations of all other governmental agencies which may pertain to the above equipment.

Seyed Sadredin, Executive Director / APCO

DRAFT

DAVID WARNER, Director of Permit Services
N-7855-738-0 : Mar 23 2011 1:27PM -- ROBERTSD : Joint Inspection NOT Required

8. Total annual VOC emissions from wine fermentation operations shall be determined by the following formula: Total annual VOC emissions = (Total Annual Red Wine Production-gal) x (6.2 lb-VOC/1000 gal) + (Total Annual White Wine Production-gal) x (2.5 lb-VOC/1000 gal). [District Rule 2201]

9. When used for wine storage, this tank shall be equipped with and operated with a pressure-vacuum relief valve, which shall operate within 10% of the maximum allowable working pressure of the tank, operate in accordance with the manufacturer's instructions, and be permanently labeled with the operating pressure settings. [District Rules 2201 and 4694]

10. When used for wine storage, the pressure-vacuum relief valve and storage tank shall remain in a gas-tight condition, except when the operating pressure of the tank exceeds the valve set pressure. A gas-tight condition shall be determined by measuring the gas leak in accordance with the procedures in EPA Method 21. [District Rules 2201 and 4694]

11. The temperature of the wine stored in this tank shall be maintained at or below 75 degrees Fahrenheit. For each batch of wine, the operator shall achieve the storage temperature of 75 degrees Fahrenheit or less within 60 days after completing fermentation, and shall maintain records to show when the required storage temperature of 75 degrees Fahrenheit or less was achieved. [District Rules 2201 and 4694]

12. The average fermentation temperature of each batch of must fermented in this tank shall not exceed 95 oF, calculated as the average of all temperature measurements for the batch taken at least every 12 hours over the course of the fermentation. [District Rule 2201]

13. A Three-Year Compliance Plan that demonstrates compliance with the requirements of Section 5.1 of District Rule 4694 for each year of the applicable compliance period shall be submitted to the District by no later than December 1, 2012, and every three years thereafter on or before December 1. [District Rule 4694]

14. A Three-Year Compliance Plan Verification that demonstrates that the Three-Year Compliance Plan elements are in effect shall be submitted to the District by no later than July 1, 2013, and every three years thereafter on or before July 1. [District Rule 4694]

15. An Annual Compliance Plan Demonstration that shows compliance with the applicable requirements of this rule shall be submitted to the District by no later than February 1, 2012, and every year thereafter on or before February 1. [District Rule 4694]

16. Operators using CER to mitigate fermentation emissions shall perform all monitoring and recordkeeping, as established in their approved Three-Year Compliance Plan, and shall maintain all records necessary to demonstrate compliance. [District Rule 4694]

17. Operators using District Obtained Emission Reductions (DOER) shall submit payment of DOER and administrative fees to the District no later than March 1, of the first year in the applicable compliance period. [District Rule 4694]

18. For each batch of must fermented in this tank, the operator shall record the fermentation completion date, the total gallons of must fermented, the average fermentation temperature and the uncontrolled fermentation emissions and fermentation emission reductions (calculated per the emission factors given in District Rule 4694). The information shall be recorded by the tank Permit to Operate number and by wine type, stated as either red wine or white wine. [District Rules 2201 and 4694]

19. When used for wine storage, daily throughput records, including records of filling and emptying operations, the dates of such operations, a unique identifier for each batch, the volume percent ethanol in the batch, and the volume of wine transferred, shall be maintained. [District Rules 2201 and 4694]

20. When used for wine storage, the operator shall record, on a weekly basis, the total gallons of wine contained in the tank and the maximum temperature of the stored wine. [District Rule 4694]

21. Records of total annual fermentation and total annual storage emissions, including calculation methods and parameters used, shall be maintained. [District Rule 1070 and 2201]

22. Separate annual records of total red wine and total white wine produced by fermentation at this facility, based on values reported to the Alcohol and Tobacco Tax and Trade Bureau (TTB), U.S. Department of the Treasury, shall be maintained. [District Rule 1070 and 2201]

DRAFT

CONDITIONS CONTINUE ON NEXT PAGE

23. All records shall be retained on-site for a period of at least five years and made available for District inspection upon request. [District Rules 2201 and 4694]

DRAFT

San Joaquin Valley
Air Pollution Control District

AUTHORITY TO CONSTRUCT

DRAFT

PERMIT NO: N-7855-739-0 **ISSUANCE DATE:** DRAFT

LEGAL OWNER OR OPERATOR: SUTTER HOME WINERY
MAILING ADDRESS: P O BOX 248
ST HELENA, CA 94574-0248

LOCATION: 18667 N JACOB BRACK RD
LODI, CA 95242

EQUIPMENT DESCRIPTION:
366,000 GALLON WHITE WINE FERMENTATION TANK AND WINE STORAGE TANK (TANK 1500) WITH PRESSURE/VACUUM VALVE AND INSULATION

CONDITIONS

1. {98} No air contaminant shall be released into the atmosphere which causes a public nuisance. [District Rule 4102]
2. The VOC emissions rate for fermentation operations in this tank shall not exceed 1.62 lb/day per 1000 gallons of tank capacity. [District Rule 2201]
3. The ethanol content of wine stored in this tank shall not exceed 23.9 percent by volume. [District Rule 2201]
4. When this tank is used for wine storage, the daily tank throughput, in gallons, shall not exceed five times the maximum nominal tank capacity stated on the equipment description. [District Rule 2201]
5. Total combined annual VOC emissions from all wine fermentation and wine storage operations at this facility shall not exceed 292,950 lb. [District Rule 2201]
6. Combined annual VOC emissions from all wine storage operations shall be determined as the sum of the emissions for each individual wine movement based on the volume transferred in each wine movement and the batch-specific wine storage emission factor calculated using the equation(s) specified within this permit. [District Rule 2201]
7. The annual VOC wine storage emission factor (EF) for each wine transfer shall be selected from the following emission factors based on the ethanol content of the wine transferred: For wine with ethanol content less than 14 volume percent: EF = 0.198 lb-VOC/1000 gallons; For wine with ethanol content between 14 and 21 volume percent, EF = 0.314 lb-VOC/1000 gallons; For wine with ethanol content greater than 21 volume percent, EF = 0.363 lb-VOC/1000 gallon. [District Rule 2201]

CONDITIONS CONTINUE ON NEXT PAGE

YOU MUST NOTIFY THE DISTRICT COMPLIANCE DIVISION AT (209) 557-6400 WHEN CONSTRUCTION IS COMPLETED AND PRIOR TO OPERATING THE EQUIPMENT OR MODIFICATIONS AUTHORIZED BY THIS AUTHORITY TO CONSTRUCT. This is NOT a PERMIT TO OPERATE. Approval or denial of a PERMIT TO OPERATE will be made after an inspection to verify that the equipment has been constructed in accordance with the approved plans, specifications and conditions of this Authority to Construct, and to determine if the equipment can be operated in compliance with all Rules and Regulations of the San Joaquin Valley Unified Air Pollution Control District. Unless construction has commenced pursuant to Rule 2050, this Authority to Construct shall expire and application shall be cancelled two years from the date of issuance. The applicant is responsible for complying with all laws, ordinances and regulations of all other governmental agencies which may pertain to the above equipment.

Seyed Sadredin, Executive Director / APCO

DRAFT

DAVID WARNER, Director of Permit Services
N-7855-739-0 : Mar 23 2011 1:27PM -- ROBERTSD : Joint Inspection NOT Required

8. Total annual VOC emissions from wine fermentation operations shall be determined by the following formula: Total annual VOC emissions = (Total Annual Red Wine Production-gal) x (6.2 lb-VOC/1000 gal) + (Total Annual White Wine Production-gal) x (2.5 lb-VOC/1000 gal). [District Rule 2201]

9. When used for wine storage, this tank shall be equipped with and operated with a pressure-vacuum relief valve, which shall operate within 10% of the maximum allowable working pressure of the tank, operate in accordance with the manufacturer's instructions, and be permanently labeled with the operating pressure settings. [District Rules 2201 and 4694]

10. When used for wine storage, the pressure-vacuum relief valve and storage tank shall remain in a gas-tight condition, except when the operating pressure of the tank exceeds the valve set pressure. A gas-tight condition shall be determined by measuring the gas leak in accordance with the procedures in EPA Method 21. [District Rules 2201 and 4694]

11. The temperature of the wine stored in this tank shall be maintained at or below 75 degrees Fahrenheit. For each batch of wine, the operator shall achieve the storage temperature of 75 degrees Fahrenheit or less within 60 days after completing fermentation, and shall maintain records to show when the required storage temperature of 75 degrees Fahrenheit or less was achieved. [District Rules 2201 and 4694]

12. The average fermentation temperature of each batch of must fermented in this tank shall not exceed 95 oF, calculated as the average of all temperature measurements for the batch taken at least every 12 hours over the course of the fermentation. [District Rule 2201]

13. A Three-Year Compliance Plan that demonstrates compliance with the requirements of Section 5.1 of District Rule 4694 for each year of the applicable compliance period shall be submitted to the District by no later than December 1, 2012, and every three years thereafter on or before December 1. [District Rule 4694]

14. A Three-Year Compliance Plan Verification that demonstrates that the Three-Year Compliance Plan elements are in effect shall be submitted to the District by no later than July 1, 2013, and every three years thereafter on or before July 1. [District Rule 4694]

15. An Annual Compliance Plan Demonstration that shows compliance with the applicable requirements of this rule shall be submitted to the District by no later than February 1, 2012, and every year thereafter on or before February 1. [District Rule 4694]

16. Operators using CER to mitigate fermentation emissions shall perform all monitoring and recordkeeping, as established in their approved Three-Year Compliance Plan, and shall maintain all records necessary to demonstrate compliance. [District Rule 4694]

17. Operators using District Obtained Emission Reductions (DOER) shall submit payment of DOER and administrative fees to the District no later than March 1, of the first year in the applicable compliance period. [District Rule 4694]

18. For each batch of must fermented in this tank, the operator shall record the fermentation completion date, the total gallons of must fermented, the average fermentation temperature and the uncontrolled fermentation emissions and fermentation emission reductions (calculated per the emission factors given in District Rule 4694). The information shall be recorded by the tank Permit to Operate number and by wine type, stated as either red wine or white wine. [District Rules 2201 and 4694]

19. When used for wine storage, daily throughput records, including records of filling and emptying operations, the dates of such operations, a unique identifier for each batch, the volume percent ethanol in the batch, and the volume of wine transferred, shall be maintained. [District Rules 2201 and 4694]

20. When used for wine storage, the operator shall record, on a weekly basis, the total gallons of wine contained in the tank and the maximum temperature of the stored wine. [District Rule 4694]

21. Records of total annual fermentation and total annual storage emissions, including calculation methods and parameters used, shall be maintained. [District Rule 1070 and 2201]

22. Separate annual records of total red wine and total white wine produced by fermentation at this facility, based on values reported to the Alcohol and Tobacco Tax and Trade Bureau (TTB), U.S. Department of the Treasury, shall be maintained. [District Rule 1070 and 2201]

DRAFT

CONDITIONS CONTINUE ON NEXT PAGE

23. All records shall be retained on-site for a period of at least five years and made available for District inspection upon request. [District Rules 2201 and 4694]

DRAFT

San Joaquin Valley
Air Pollution Control District

AUTHORITY TO CONSTRUCT

DRAFT

PERMIT NO: N-7855-740-0 **ISSUANCE DATE:** DRAFT

LEGAL OWNER OR OPERATOR: SUTTER HOME WINERY
MAILING ADDRESS: P O BOX 248
ST HELENA, CA 94574-0248

LOCATION: 18667 N JACOB BRACK RD
LODI, CA 95242

EQUIPMENT DESCRIPTION:
366,000 GALLON WHITE WINE FERMENTATION TANK AND WINE STORAGE TANK (TANK 1501) WITH PRESSURE/VACUUM VALVE AND INSULATION

CONDITIONS

1. {98} No air contaminant shall be released into the atmosphere which causes a public nuisance. [District Rule 4102]
2. The VOC emissions rate for fermentation operations in this tank shall not exceed 1.62 lb/day per 1000 gallons of tank capacity. [District Rule 2201]
3. The ethanol content of wine stored in this tank shall not exceed 23.9 percent by volume. [District Rule 2201]
4. When this tank is used for wine storage, the daily tank throughput, in gallons, shall not exceed five times the maximum nominal tank capacity stated on the equipment description. [District Rule 2201]
5. Total combined annual VOC emissions from all wine fermentation and wine storage operations at this facility shall not exceed 292,950 lb. [District Rule 2201]
6. Combined annual VOC emissions from all wine storage operations shall be determined as the sum of the emissions for each individual wine movement based on the volume transferred in each wine movement and the batch-specific wine storage emission factor calculated using the equation(s) specified within this permit. [District Rule 2201]
7. The annual VOC wine storage emission factor (EF) for each wine transfer shall be selected from the following emission factors based on the ethanol content of the wine transferred: For wine with ethanol content less than 14 volume percent: EF = 0.198 lb-VOC/1000 gallons; For wine with ethanol content between 14 and 21 volume percent, EF = 0.314 lb-VOC/1000 gallons; For wine with ethanol content greater than 21 volume percent, EF = 0.363 lb-VOC/1000 gallon. [District Rule 2201]

CONDITIONS CONTINUE ON NEXT PAGE

YOU MUST NOTIFY THE DISTRICT COMPLIANCE DIVISION AT (209) 557-6400 WHEN CONSTRUCTION IS COMPLETED AND PRIOR TO OPERATING THE EQUIPMENT OR MODIFICATIONS AUTHORIZED BY THIS AUTHORITY TO CONSTRUCT. This is NOT a PERMIT TO OPERATE. Approval or denial of a PERMIT TO OPERATE will be made after an inspection to verify that the equipment has been constructed in accordance with the approved plans, specifications and conditions of this Authority to Construct, and to determine if the equipment can be operated in compliance with all Rules and Regulations of the San Joaquin Valley Unified Air Pollution Control District. Unless construction has commenced pursuant to Rule 2050, this Authority to Construct shall expire and application shall be cancelled two years from the date of issuance. The applicant is responsible for complying with all laws, ordinances and regulations of all other governmental agencies which may pertain to the above equipment.

Seyed Sadredin, Executive Director / APCO

DRAFT

DAVID WARNER, Director of Permit Services
N-7855-740-0 : Mar 23 2011 1:27PM – ROBERTSD : Joint Inspection NOT Required

8. Total annual VOC emissions from wine fermentation operations shall be determined by the following formula: Total annual VOC emissions = (Total Annual Red Wine Production-gal) x (6.2 lb-VOC/1000 gal) + (Total Annual White Wine Production-gal) x (2.5 lb-VOC/1000 gal). [District Rule 2201]

9. When used for wine storage, this tank shall be equipped with and operated with a pressure-vacuum relief valve, which shall operate within 10% of the maximum allowable working pressure of the tank, operate in accordance with the manufacturer's instructions, and be permanently labeled with the operating pressure settings. [District Rules 2201 and 4694]

10. When used for wine storage, the pressure-vacuum relief valve and storage tank shall remain in a gas-tight condition, except when the operating pressure of the tank exceeds the valve set pressure. A gas-tight condition shall be determined by measuring the gas leak in accordance with the procedures in EPA Method 21. [District Rules 2201 and 4694]

11. The temperature of the wine stored in this tank shall be maintained at or below 75 degrees Fahrenheit. For each batch of wine, the operator shall achieve the storage temperature of 75 degrees Fahrenheit or less within 60 days after completing fermentation, and shall maintain records to show when the required storage temperature of 75 degrees Fahrenheit or less was achieved. [District Rules 2201 and 4694]

12. The average fermentation temperature of each batch of must fermented in this tank shall not exceed 95 oF, calculated as the average of all temperature measurements for the batch taken at least every 12 hours over the course of the fermentation. [District Rule 2201]

13. A Three-Year Compliance Plan that demonstrates compliance with the requirements of Section 5.1 of District Rule 4694 for each year of the applicable compliance period shall be submitted to the District by no later than December 1, 2012, and every three years thereafter on or before December 1. [District Rule 4694]

14. A Three-Year Compliance Plan Verification that demonstrates that the Three-Year Compliance Plan elements are in effect shall be submitted to the District by no later than July 1, 2013, and every three years thereafter on or before July 1. [District Rule 4694]

15. An Annual Compliance Plan Demonstration that shows compliance with the applicable requirements of this rule shall be submitted to the District by no later than February 1, 2012, and every year thereafter on or before February 1. [District Rule 4694]

16. Operators using CER to mitigate fermentation emissions shall perform all monitoring and recordkeeping, as established in their approved Three-Year Compliance Plan, and shall maintain all records necessary to demonstrate compliance. [District Rule 4694]

17. Operators using District Obtained Emission Reductions (DOER) shall submit payment of DOER and administrative fees to the District no later than March 1, of the first year in the applicable compliance period. [District Rule 4694]

18. For each batch of must fermented in this tank, the operator shall record the fermentation completion date, the total gallons of must fermented, the average fermentation temperature and the uncontrolled fermentation emissions and fermentation emission reductions (calculated per the emission factors given in District Rule 4694). The information shall be recorded by the tank Permit to Operate number and by wine type, stated as either red wine or white wine. [District Rules 2201 and 4694]

19. When used for wine storage, daily throughput records, including records of filling and emptying operations, the dates of such operations, a unique identifier for each batch, the volume percent ethanol in the batch, and the volume of wine transferred, shall be maintained. [District Rules 2201 and 4694]

20. When used for wine storage, the operator shall record, on a weekly basis, the total gallons of wine contained in the tank and the maximum temperature of the stored wine. [District Rule 4694]

21. Records of total annual fermentation and total annual storage emissions, including calculation methods and parameters used, shall be maintained. [District Rule 1070 and 2201]

22. Separate annual records of total red wine and total white wine produced by fermentation at this facility, based on values reported to the Alcohol and Tobacco Tax and Trade Bureau (TTB), U.S. Department of the Treasury, shall be maintained. [District Rule 1070 and 2201]

DRAFT

CONDITIONS CONTINUE ON NEXT PAGE

23. All records shall be retained on-site for a period of at least five years and made available for District inspection upon request. [District Rules 2201 and 4694]

DRAFT

San Joaquin Valley
Air Pollution Control District

AUTHORITY TO CONSTRUCT

DRAFT

PERMIT NO: N-7855-741-0 **ISSUANCE DATE:** DRAFT

LEGAL OWNER OR OPERATOR: SUTTER HOME WINERY
MAILING ADDRESS: P O BOX 248
ST HELENA, CA 94574-0248

LOCATION: 18667 N JACOB BRACK RD
LODI, CA 95242

EQUIPMENT DESCRIPTION:
366,000 GALLON WHITE WINE FERMENTATION TANK AND WINE STORAGE TANK (TANK 1502) WITH PRESSURE/VACUUM VALVE AND INSULATION

CONDITIONS

1. {98} No air contaminant shall be released into the atmosphere which causes a public nuisance. [District Rule 4102]
2. The VOC emissions rate for fermentation operations in this tank shall not exceed 1.62 lb/day per 1000 gallons of tank capacity. [District Rule 2201]
3. The ethanol content of wine stored in this tank shall not exceed 23.9 percent by volume. [District Rule 2201]
4. When this tank is used for wine storage, the daily tank throughput, in gallons, shall not exceed five times the maximum nominal tank capacity stated on the equipment description. [District Rule 2201]
5. Total combined annual VOC emissions from all wine fermentation and wine storage operations at this facility shall not exceed 292,950 lb. [District Rule 2201]
6. Combined annual VOC emissions from all wine storage operations shall be determined as the sum of the emissions for each individual wine movement based on the volume transferred in each wine movement and the batch-specific wine storage emission factor calculated using the equation(s) specified within this permit. [District Rule 2201]
7. The annual VOC wine storage emission factor (EF) for each wine transfer shall be selected from the following emission factors based on the ethanol content of the wine transferred: For wine with ethanol content less than 14 volume percent: EF = 0.198 lb-VOC/1000 gallons; For wine with ethanol content between 14 and 21 volume percent, EF = 0.314 lb-VOC/1000 gallons; For wine with ethanol content greater than 21 volume percent, EF = 0.363 lb-VOC/1000 gallon. [District Rule 2201]

CONDITIONS CONTINUE ON NEXT PAGE

YOU MUST NOTIFY THE DISTRICT COMPLIANCE DIVISION AT (209) 557-6400 WHEN CONSTRUCTION IS COMPLETED AND PRIOR TO OPERATING THE EQUIPMENT OR MODIFICATIONS AUTHORIZED BY THIS AUTHORITY TO CONSTRUCT. This is NOT a PERMIT TO OPERATE. Approval or denial of a PERMIT TO OPERATE will be made after an inspection to verify that the equipment has been constructed in accordance with the approved plans, specifications and conditions of this Authority to Construct, and to determine if the equipment can be operated in compliance with all Rules and Regulations of the San Joaquin Valley Unified Air Pollution Control District. Unless construction has commenced pursuant to Rule 2050, this Authority to Construct shall expire and application shall be cancelled two years from the date of issuance. The applicant is responsible for complying with all laws, ordinances and regulations of all other governmental agencies which may pertain to the above equipment.

Seyed Sadredin, Executive Director / APCO

DRAFT

DAVID WARNER, Director of Permit Services
N-7855-741-0 : Mar 23 2011 1:27PM -- ROBERTSD : Joint Inspection NOT Required

8. Total annual VOC emissions from wine fermentation operations shall be determined by the following formula: Total annual VOC emissions = (Total Annual Red Wine Production-gal) x (6.2 lb-VOC/1000 gal) + (Total Annual White Wine Production-gal) x (2.5 lb-VOC/1000 gal). [District Rule 2201]

9. When used for wine storage, this tank shall be equipped with and operated with a pressure-vacuum relief valve, which shall operate within 10% of the maximum allowable working pressure of the tank, operate in accordance with the manufacturer's instructions, and be permanently labeled with the operating pressure settings. [District Rules 2201 and 4694]

10. When used for wine storage, the pressure-vacuum relief valve and storage tank shall remain in a gas-tight condition, except when the operating pressure of the tank exceeds the valve set pressure. A gas-tight condition shall be determined by measuring the gas leak in accordance with the procedures in EPA Method 21. [District Rules 2201 and 4694]

11. The temperature of the wine stored in this tank shall be maintained at or below 75 degrees Fahrenheit. For each batch of wine, the operator shall achieve the storage temperature of 75 degrees Fahrenheit or less within 60 days after completing fermentation, and shall maintain records to show when the required storage temperature of 75 degrees Fahrenheit or less was achieved. [District Rules 2201 and 4694]

12. The average fermentation temperature of each batch of must fermented in this tank shall not exceed 95 oF, calculated as the average of all temperature measurements for the batch taken at least every 12 hours over the course of the fermentation. [District Rule 2201]

13. A Three-Year Compliance Plan that demonstrates compliance with the requirements of Section 5.1 of District Rule 4694 for each year of the applicable compliance period shall be submitted to the District by no later than December 1, 2012, and every three years thereafter on or before December 1. [District Rule 4694]

14. A Three-Year Compliance Plan Verification that demonstrates that the Three-Year Compliance Plan elements are in effect shall be submitted to the District by no later than July 1, 2013, and every three years thereafter on or before July 1. [District Rule 4694]

15. An Annual Compliance Plan Demonstration that shows compliance with the applicable requirements of this rule shall be submitted to the District by no later than February 1, 2012, and every year thereafter on or before February 1. [District Rule 4694]

16. Operators using CER to mitigate fermentation emissions shall perform all monitoring and recordkeeping, as established in their approved Three-Year Compliance Plan, and shall maintain all records necessary to demonstrate compliance. [District Rule 4694]

17. Operators using District Obtained Emission Reductions (DOER) shall submit payment of DOER and administrative fees to the District no later than March 1, of the first year in the applicable compliance period. [District Rule 4694]

18. For each batch of must fermented in this tank, the operator shall record the fermentation completion date, the total gallons of must fermented, the average fermentation temperature and the uncontrolled fermentation emissions and fermentation emission reductions (calculated per the emission factors given in District Rule 4694). The information shall be recorded by the tank Permit to Operate number and by wine type, stated as either red wine or white wine. [District Rules 2201 and 4694]

19. When used for wine storage, daily throughput records, including records of filling and emptying operations, the dates of such operations, a unique identifier for each batch, the volume percent ethanol in the batch, and the volume of wine transferred, shall be maintained. [District Rules 2201 and 4694]

20. When used for wine storage, the operator shall record, on a weekly basis, the total gallons of wine contained in the tank and the maximum temperature of the stored wine. [District Rule 4694]

21. Records of total annual fermentation and total annual storage emissions, including calculation methods and parameters used, shall be maintained. [District Rule 1070 and 2201]

22. Separate annual records of total red wine and total white wine produced by fermentation at this facility, based on values reported to the Alcohol and Tobacco Tax and Trade Bureau (TTB), U.S. Department of the Treasury, shall be maintained. [District Rule 1070 and 2201]

DRAFT

CONDITIONS CONTINUE ON NEXT PAGE

23. All records shall be retained on-site for a period of at least five years and made available for District inspection upon request. [District Rules 2201 and 4694]

DRAFT

San Joaquin Valley
Air Pollution Control District

AUTHORITY TO CONSTRUCT

DRAFT

PERMIT NO: N-7855-742-0 **ISSUANCE DATE:** DRAFT

LEGAL OWNER OR OPERATOR: SUTTER HOME WINERY
MAILING ADDRESS: P O BOX 248
ST HELENA, CA 94574-0248

LOCATION: 18667 N JACOB BRACK RD
LODI, CA 95242

EQUIPMENT DESCRIPTION:
366,000 GALLON WHITE WINE FERMENTATION TANK AND WINE STORAGE TANK (TANK 1503) WITH PRESSURE/VACUUM VALVE AND INSULATION

CONDITIONS

1. {98} No air contaminant shall be released into the atmosphere which causes a public nuisance. [District Rule 4102]
2. The VOC emissions rate for fermentation operations in this tank shall not exceed 1.62 lb/day per 1000 gallons of tank capacity. [District Rule 2201]
3. The ethanol content of wine stored in this tank shall not exceed 23.9 percent by volume. [District Rule 2201]
4. When this tank is used for wine storage, the daily tank throughput, in gallons, shall not exceed five times the maximum nominal tank capacity stated on the equipment description. [District Rule 2201]
5. Total combined annual VOC emissions from all wine fermentation and wine storage operations at this facility shall not exceed 292,950 lb. [District Rule 2201]
6. Combined annual VOC emissions from all wine storage operations shall be determined as the sum of the emissions for each individual wine movement based on the volume transferred in each wine movement and the batch-specific wine storage emission factor calculated using the equation(s) specified within this permit. [District Rule 2201]
7. The annual VOC wine storage emission factor (EF) for each wine transfer shall be selected from the following emission factors based on the ethanol content of the wine transferred: For wine with ethanol content less than 14 volume percent: EF = 0.198 lb-VOC/1000 gallons; For wine with ethanol content between 14 and 21 volume percent, EF = 0.314 lb-VOC/1000 gallons; For wine with ethanol content greater than 21 volume percent, EF = 0.363 lb-VOC/1000 gallon. [District Rule 2201]

CONDITIONS CONTINUE ON NEXT PAGE

YOU MUST NOTIFY THE DISTRICT COMPLIANCE DIVISION AT (209) 557-6400 WHEN CONSTRUCTION IS COMPLETED AND PRIOR TO OPERATING THE EQUIPMENT OR MODIFICATIONS AUTHORIZED BY THIS AUTHORITY TO CONSTRUCT. This is NOT a PERMIT TO OPERATE. Approval or denial of a PERMIT TO OPERATE will be made after an inspection to verify that the equipment has been constructed in accordance with the approved plans, specifications and conditions of this Authority to Construct, and to determine if the equipment can be operated in compliance with all Rules and Regulations of the San Joaquin Valley Unified Air Pollution Control District. Unless construction has commenced pursuant to Rule 2050, this Authority to Construct shall expire and application shall be cancelled two years from the date of issuance. The applicant is responsible for complying with all laws, ordinances and regulations of all other governmental agencies which may pertain to the above equipment.

Seyed Sadredin, Executive Director / APCO

DRAFT

DAVID WARNER, Director of Permit Services
N-7855-742-0 : Mar 23 2011 1:27PM -- ROBERTSD : Joint Inspection NOT Required

8. Total annual VOC emissions from wine fermentation operations shall be determined by the following formula: Total annual VOC emissions = (Total Annual Red Wine Production-gal) x (6.2 lb-VOC/1000 gal) + (Total Annual White Wine Production-gal) x (2.5 lb-VOC/1000 gal). [District Rule 2201]

9. When used for wine storage, this tank shall be equipped with and operated with a pressure-vacuum relief valve, which shall operate within 10% of the maximum allowable working pressure of the tank, operate in accordance with the manufacturer's instructions, and be permanently labeled with the operating pressure settings. [District Rules 2201 and 4694]

10. When used for wine storage, the pressure-vacuum relief valve and storage tank shall remain in a gas-tight condition, except when the operating pressure of the tank exceeds the valve set pressure. A gas-tight condition shall be determined by measuring the gas leak in accordance with the procedures in EPA Method 21. [District Rules 2201 and 4694]

11. The temperature of the wine stored in this tank shall be maintained at or below 75 degrees Fahrenheit. For each batch of wine, the operator shall achieve the storage temperature of 75 degrees Fahrenheit or less within 60 days after completing fermentation, and shall maintain records to show when the required storage temperature of 75 degrees Fahrenheit or less was achieved. [District Rules 2201 and 4694]

12. The average fermentation temperature of each batch of must fermented in this tank shall not exceed 95 oF, calculated as the average of all temperature measurements for the batch taken at least every 12 hours over the course of the fermentation. [District Rule 2201]

13. A Three-Year Compliance Plan that demonstrates compliance with the requirements of Section 5.1 of District Rule 4694 for each year of the applicable compliance period shall be submitted to the District by no later than December 1, 2012, and every three years thereafter on or before December 1. [District Rule 4694]

14. A Three-Year Compliance Plan Verification that demonstrates that the Three-Year Compliance Plan elements are in effect shall be submitted to the District by no later than July 1, 2013, and every three years thereafter on or before July 1. [District Rule 4694]

15. An Annual Compliance Plan Demonstration that shows compliance with the applicable requirements of this rule shall be submitted to the District by no later than February 1, 2012, and every year thereafter on or before February 1. [District Rule 4694]

16. Operators using CER to mitigate fermentation emissions shall perform all monitoring and recordkeeping, as established in their approved Three-Year Compliance Plan, and shall maintain all records necessary to demonstrate compliance. [District Rule 4694]

17. Operators using District Obtained Emission Reductions (DOER) shall submit payment of DOER and administrative fees to the District no later than March 1, of the first year in the applicable compliance period. [District Rule 4694]

18. For each batch of must fermented in this tank, the operator shall record the fermentation completion date, the total gallons of must fermented, the average fermentation temperature and the uncontrolled fermentation emissions and fermentation emission reductions (calculated per the emission factors given in District Rule 4694). The information shall be recorded by the tank Permit to Operate number and by wine type, stated as either red wine or white wine. [District Rules 2201 and 4694]

19. When used for wine storage, daily throughput records, including records of filling and emptying operations, the dates of such operations, a unique identifier for each batch, the volume percent ethanol in the batch, and the volume of wine transferred, shall be maintained. [District Rules 2201 and 4694]

20. When used for wine storage, the operator shall record, on a weekly basis, the total gallons of wine contained in the tank and the maximum temperature of the stored wine. [District Rule 4694]

21. Records of total annual fermentation and total annual storage emissions, including calculation methods and parameters used, shall be maintained. [District Rule 1070 and 2201]

22. Separate annual records of total red wine and total white wine produced by fermentation at this facility, based on values reported to the Alcohol and Tobacco Tax and Trade Bureau (TTB), U.S. Department of the Treasury, shall be maintained. [District Rule 1070 and 2201]

DRAFT

CONDITIONS CONTINUE ON NEXT PAGE

23. All records shall be retained on-site for a period of at least five years and made available for District inspection upon request. [District Rules 2201 and 4694]

DRAFT

San Joaquin Valley
Air Pollution Control District

AUTHORITY TO CONSTRUCT

DRAFT

PERMIT NO: N-7855-743-0 **ISSUANCE DATE:** DRAFT

LEGAL OWNER OR OPERATOR: SUTTER HOME WINERY
MAILING ADDRESS: P O BOX 248
ST HELENA, CA 94574-0248

LOCATION: 18667 N JACOB BRACK RD
LODI, CA 95242

EQUIPMENT DESCRIPTION:
366,000 GALLON WHITE WINE FERMENTATION TANK AND WINE STORAGE TANK (TANK 1504) WITH PRESSURE/VACUUM VALVE AND INSULATION

CONDITIONS

1. {98} No air contaminant shall be released into the atmosphere which causes a public nuisance. [District Rule 4102]
2. The VOC emissions rate for fermentation operations in this tank shall not exceed 1.62 lb/day per 1000 gallons of tank capacity. [District Rule 2201]
3. The ethanol content of wine stored in this tank shall not exceed 23.9 percent by volume. [District Rule 2201]
4. When this tank is used for wine storage, the daily tank throughput, in gallons, shall not exceed five times the maximum nominal tank capacity stated on the equipment description. [District Rule 2201]
5. Total combined annual VOC emissions from all wine fermentation and wine storage operations at this facility shall not exceed 292,950 lb. [District Rule 2201]
6. Combined annual VOC emissions from all wine storage operations shall be determined as the sum of the emissions for each individual wine movement based on the volume transferred in each wine movement and the batch-specific wine storage emission factor calculated using the equation(s) specified within this permit. [District Rule 2201]
7. The annual VOC wine storage emission factor (EF) for each wine transfer shall be selected from the following emission factors based on the ethanol content of the wine transferred: For wine with ethanol content less than 14 volume percent: EF = 0.198 lb-VOC/1000 gallons; For wine with ethanol content between 14 and 21 volume percent, EF = 0.314 lb-VOC/1000 gallons; For wine with ethanol content greater than 21 volume percent, EF = 0.363 lb-VOC/1000 gallon. [District Rule 2201]

CONDITIONS CONTINUE ON NEXT PAGE

YOU MUST NOTIFY THE DISTRICT COMPLIANCE DIVISION AT (209) 557-6400 WHEN CONSTRUCTION IS COMPLETED AND PRIOR TO OPERATING THE EQUIPMENT OR MODIFICATIONS AUTHORIZED BY THIS AUTHORITY TO CONSTRUCT. This is NOT a PERMIT TO OPERATE. Approval or denial of a PERMIT TO OPERATE will be made after an inspection to verify that the equipment has been constructed in accordance with the approved plans, specifications and conditions of this Authority to Construct, and to determine if the equipment can be operated in compliance with all Rules and Regulations of the San Joaquin Valley Unified Air Pollution Control District. Unless construction has commenced pursuant to Rule 2050, this Authority to Construct shall expire and application shall be cancelled two years from the date of issuance. The applicant is responsible for complying with all laws, ordinances and regulations of all other governmental agencies which may pertain to the above equipment.

Seyed Sadredin, Executive Director / APCO

DRAFT

DAVID WARNER, Director of Permit Services
N-7855-743-0: Mar 23 2011 1:27PM – ROBERTSD : Joint Inspection NOT Required

8. Total annual VOC emissions from wine fermentation operations shall be determined by the following formula: Total annual VOC emissions = (Total Annual Red Wine Production-gal) x (6.2 lb-VOC/1000 gal) + (Total Annual White Wine Production-gal) x (2.5 lb-VOC/1000 gal). [District Rule 2201]

9. When used for wine storage, this tank shall be equipped with and operated with a pressure-vacuum relief valve, which shall operate within 10% of the maximum allowable working pressure of the tank, operate in accordance with the manufacturer's instructions, and be permanently labeled with the operating pressure settings. [District Rules 2201 and 4694]

10. When used for wine storage, the pressure-vacuum relief valve and storage tank shall remain in a gas-tight condition, except when the operating pressure of the tank exceeds the valve set pressure. A gas-tight condition shall be determined by measuring the gas leak in accordance with the procedures in EPA Method 21. [District Rules 2201 and 4694]

11. The temperature of the wine stored in this tank shall be maintained at or below 75 degrees Fahrenheit. For each batch of wine, the operator shall achieve the storage temperature of 75 degrees Fahrenheit or less within 60 days after completing fermentation, and shall maintain records to show when the required storage temperature of 75 degrees Fahrenheit or less was achieved. [District Rules 2201 and 4694]

12. The average fermentation temperature of each batch of must fermented in this tank shall not exceed 95 oF, calculated as the average of all temperature measurements for the batch taken at least every 12 hours over the course of the fermentation. [District Rule 2201]

13. A Three-Year Compliance Plan that demonstrates compliance with the requirements of Section 5.1 of District Rule 4694 for each year of the applicable compliance period shall be submitted to the District by no later than December 1, 2012, and every three years thereafter on or before December 1. [District Rule 4694]

14. A Three-Year Compliance Plan Verification that demonstrates that the Three-Year Compliance Plan elements are in effect shall be submitted to the District by no later than July 1, 2013, and every three years thereafter on or before July 1. [District Rule 4694]

15. An Annual Compliance Plan Demonstration that shows compliance with the applicable requirements of this rule shall be submitted to the District by no later than February 1, 2012, and every year thereafter on or before February 1. [District Rule 4694]

16. Operators using CER to mitigate fermentation emissions shall perform all monitoring and recordkeeping, as established in their approved Three-Year Compliance Plan, and shall maintain all records necessary to demonstrate compliance. [District Rule 4694]

17. Operators using District Obtained Emission Reductions (DOER) shall submit payment of DOER and administrative fees to the District no later than March 1, of the first year in the applicable compliance period. [District Rule 4694]

18. For each batch of must fermented in this tank, the operator shall record the fermentation completion date, the total gallons of must fermented, the average fermentation temperature and the uncontrolled fermentation emissions and fermentation emission reductions (calculated per the emission factors given in District Rule 4694). The information shall be recorded by the tank Permit to Operate number and by wine type, stated as either red wine or white wine. [District Rules 2201 and 4694]

19. When used for wine storage, daily throughput records, including records of filling and emptying operations, the dates of such operations, a unique identifier for each batch, the volume percent ethanol in the batch, and the volume of wine transferred, shall be maintained. [District Rules 2201 and 4694]

20. When used for wine storage, the operator shall record, on a weekly basis, the total gallons of wine contained in the tank and the maximum temperature of the stored wine. [District Rule 4694]

21. Records of total annual fermentation and total annual storage emissions, including calculation methods and parameters used, shall be maintained. [District Rule 1070 and 2201]

22. Separate annual records of total red wine and total white wine produced by fermentation at this facility, based on values reported to the Alcohol and Tobacco Tax and Trade Bureau (TTB), U.S. Department of the Treasury, shall be maintained. [District Rule 1070 and 2201]

DRAFT

CONDITIONS CONTINUE ON NEXT PAGE

23. All records shall be retained on-site for a period of at least five years and made available for District inspection upon request. [District Rules 2201 and 4694]

DRAFT

San Joaquin Valley
Air Pollution Control District

AUTHORITY TO CONSTRUCT

DRAFT

PERMIT NO: N-7855-744-0 **ISSUANCE DATE:** DRAFT

LEGAL OWNER OR OPERATOR: SUTTER HOME WINERY
MAILING ADDRESS: P O BOX 248
ST HELENA, CA 94574-0248

LOCATION: 18667 N JACOB BRACK RD
LODI, CA 95242

EQUIPMENT DESCRIPTION:
366,000 GALLON WHITE WINE FERMENTATION TANK AND WINE STORAGE TANK (TANK 1505) WITH PRESSURE/VACUUM VALVE AND INSULATION

CONDITIONS

1. {98} No air contaminant shall be released into the atmosphere which causes a public nuisance. [District Rule 4102]
2. The VOC emissions rate for fermentation operations in this tank shall not exceed 1.62 lb/day per 1000 gallons of tank capacity. [District Rule 2201]
3. The ethanol content of wine stored in this tank shall not exceed 23.9 percent by volume. [District Rule 2201]
4. When this tank is used for wine storage, the daily tank throughput, in gallons, shall not exceed five times the maximum nominal tank capacity stated on the equipment description. [District Rule 2201]
5. Total combined annual VOC emissions from all wine fermentation and wine storage operations at this facility shall not exceed 292,950 lb. [District Rule 2201]
6. Combined annual VOC emissions from all wine storage operations shall be determined as the sum of the emissions for each individual wine movement based on the volume transferred in each wine movement and the batch-specific wine storage emission factor calculated using the equation(s) specified within this permit. [District Rule 2201]
7. The annual VOC wine storage emission factor (EF) for each wine transfer shall be selected from the following emission factors based on the ethanol content of the wine transferred: For wine with ethanol content less than 14 volume percent: EF = 0.198 lb-VOC/1000 gallons; For wine with ethanol content between 14 and 21 volume percent, EF = 0.314 lb-VOC/1000 gallons; For wine with ethanol content greater than 21 volume percent, EF = 0.363 lb-VOC/1000 gallon. [District Rule 2201]

CONDITIONS CONTINUE ON NEXT PAGE

YOU MUST NOTIFY THE DISTRICT COMPLIANCE DIVISION AT (209) 557-6400 WHEN CONSTRUCTION IS COMPLETED AND PRIOR TO OPERATING THE EQUIPMENT OR MODIFICATIONS AUTHORIZED BY THIS AUTHORITY TO CONSTRUCT. This is NOT a PERMIT TO OPERATE. Approval or denial of a PERMIT TO OPERATE will be made after an inspection to verify that the equipment has been constructed in accordance with the approved plans, specifications and conditions of this Authority to Construct, and to determine if the equipment can be operated in compliance with all Rules and Regulations of the San Joaquin Valley Unified Air Pollution Control District. Unless construction has commenced pursuant to Rule 2050, this Authority to Construct shall expire and application shall be cancelled two years from the date of issuance. The applicant is responsible for complying with all laws, ordinances and regulations of all other governmental agencies which may pertain to the above equipment.

Seyed Sadredin, Executive Director / APCO

DRAFT

DAVID WARNER, Director of Permit Services
N-7855-744-0 : Mar 23 2011 1:27PM -- ROBERTSD : Joint Inspection NOT Required

8. Total annual VOC emissions from wine fermentation operations shall be determined by the following formula: Total annual VOC emissions = (Total Annual Red Wine Production-gal) x (6.2 lb-VOC/1000 gal) + (Total Annual White Wine Production-gal) x (2.5 lb-VOC/1000 gal). [District Rule 2201]

9. When used for wine storage, this tank shall be equipped with and operated with a pressure-vacuum relief valve, which shall operate within 10% of the maximum allowable working pressure of the tank, operate in accordance with the manufacturer's instructions, and be permanently labeled with the operating pressure settings. [District Rules 2201 and 4694]

10. When used for wine storage, the pressure-vacuum relief valve and storage tank shall remain in a gas-tight condition, except when the operating pressure of the tank exceeds the valve set pressure. A gas-tight condition shall be determined by measuring the gas leak in accordance with the procedures in EPA Method 21. [District Rules 2201 and 4694]

11. The temperature of the wine stored in this tank shall be maintained at or below 75 degrees Fahrenheit. For each batch of wine, the operator shall achieve the storage temperature of 75 degrees Fahrenheit or less within 60 days after completing fermentation, and shall maintain records to show when the required storage temperature of 75 degrees Fahrenheit or less was achieved. [District Rules 2201 and 4694]

12. The average fermentation temperature of each batch of must fermented in this tank shall not exceed 95 oF, calculated as the average of all temperature measurements for the batch taken at least every 12 hours over the course of the fermentation. [District Rule 2201]

13. A Three-Year Compliance Plan that demonstrates compliance with the requirements of Section 5.1 of District Rule 4694 for each year of the applicable compliance period shall be submitted to the District by no later than December 1, 2012, and every three years thereafter on or before December 1. [District Rule 4694]

14. A Three-Year Compliance Plan Verification that demonstrates that the Three-Year Compliance Plan elements are in effect shall be submitted to the District by no later than July 1, 2013, and every three years thereafter on or before July 1. [District Rule 4694]

15. An Annual Compliance Plan Demonstration that shows compliance with the applicable requirements of this rule shall be submitted to the District by no later than February 1, 2012, and every year thereafter on or before February 1. [District Rule 4694]

16. Operators using CER to mitigate fermentation emissions shall perform all monitoring and recordkeeping, as established in their approved Three-Year Compliance Plan, and shall maintain all records necessary to demonstrate compliance. [District Rule 4694]

17. Operators using District Obtained Emission Reductions (DOER) shall submit payment of DOER and administrative fees to the District no later than March 1, of the first year in the applicable compliance period. [District Rule 4694]

18. For each batch of must fermented in this tank, the operator shall record the fermentation completion date, the total gallons of must fermented, the average fermentation temperature and the uncontrolled fermentation emissions and fermentation emission reductions (calculated per the emission factors given in District Rule 4694). The information shall be recorded by the tank Permit to Operate number and by wine type, stated as either red wine or white wine. [District Rules 2201 and 4694]

19. When used for wine storage, daily throughput records, including records of filling and emptying operations, the dates of such operations, a unique identifier for each batch, the volume percent ethanol in the batch, and the volume of wine transferred, shall be maintained. [District Rules 2201 and 4694]

20. When used for wine storage, the operator shall record, on a weekly basis, the total gallons of wine contained in the tank and the maximum temperature of the stored wine. [District Rule 4694]

21. Records of total annual fermentation and total annual storage emissions, including calculation methods and parameters used, shall be maintained. [District Rule 1070 and 2201]

22. Separate annual records of total red wine and total white wine produced by fermentation at this facility, based on values reported to the Alcohol and Tobacco Tax and Trade Bureau (TTB), U.S. Department of the Treasury, shall be maintained. [District Rule 1070 and 2201]

DRAFT

CONDITIONS CONTINUE ON NEXT PAGE

23. All records shall be retained on-site for a period of at least five years and made available for District inspection upon request. [District Rules 2201 and 4694]

DRAFT

San Joaquin Valley
Air Pollution Control District

AUTHORITY TO CONSTRUCT

DRAFT

PERMIT NO: N-7855-745-0 **ISSUANCE DATE:** DRAFT

LEGAL OWNER OR OPERATOR: SUTTER HOME WINERY
MAILING ADDRESS: P O BOX 248
ST HELENA, CA 94574-0248

LOCATION: 18667 N JACOB BRACK RD
LODI, CA 95242

EQUIPMENT DESCRIPTION:
366,000 GALLON WHITE WINE FERMENTATION TANK AND WINE STORAGE TANK (TANK 1506) WITH PRESSURE/VACUUM VALVE AND INSULATION

CONDITIONS

1. {98} No air contaminant shall be released into the atmosphere which causes a public nuisance. [District Rule 4102]
2. The VOC emissions rate for fermentation operations in this tank shall not exceed 1.62 lb/day per 1000 gallons of tank capacity. [District Rule 2201]
3. The ethanol content of wine stored in this tank shall not exceed 23.9 percent by volume. [District Rule 2201]
4. When this tank is used for wine storage, the daily tank throughput, in gallons, shall not exceed five times the maximum nominal tank capacity stated on the equipment description. [District Rule 2201]
5. Total combined annual VOC emissions from all wine fermentation and wine storage operations at this facility shall not exceed 292,950 lb. [District Rule 2201]
6. Combined annual VOC emissions from all wine storage operations shall be determined as the sum of the emissions for each individual wine movement based on the volume transferred in each wine movement and the batch-specific wine storage emission factor calculated using the equation(s) specified within this permit. [District Rule 2201]
7. The annual VOC wine storage emission factor (EF) for each wine transfer shall be selected from the following emission factors based on the ethanol content of the wine transferred: For wine with ethanol content less than 14 volume percent: EF = 0.198 lb-VOC/1000 gallons; For wine with ethanol content between 14 and 21 volume percent, EF = 0.314 lb-VOC/1000 gallons; For wine with ethanol content greater than 21 volume percent, EF = 0.363 lb-VOC/1000 gallon. [District Rule 2201]

CONDITIONS CONTINUE ON NEXT PAGE

YOU MUST NOTIFY THE DISTRICT COMPLIANCE DIVISION AT (209) 557-6400 WHEN CONSTRUCTION IS COMPLETED AND PRIOR TO OPERATING THE EQUIPMENT OR MODIFICATIONS AUTHORIZED BY THIS AUTHORITY TO CONSTRUCT. This is NOT a PERMIT TO OPERATE. Approval or denial of a PERMIT TO OPERATE will be made after an inspection to verify that the equipment has been constructed in accordance with the approved plans, specifications and conditions of this Authority to Construct, and to determine if the equipment can be operated in compliance with all Rules and Regulations of the San Joaquin Valley Unified Air Pollution Control District. Unless construction has commenced pursuant to Rule 2050, this Authority to Construct shall expire and application shall be cancelled two years from the date of issuance. The applicant is responsible for complying with all laws, ordinances and regulations of all other governmental agencies which may pertain to the above equipment.

Seyed Sadredin, Executive Director / APCO

DRAFT

DAVID WARNER, Director of Permit Services
N-7855-745-0 : Mar 23 2011 1:27PM – ROBERTSD : Joint Inspection NOT Required

8. Total annual VOC emissions from wine fermentation operations shall be determined by the following formula: Total annual VOC emissions = (Total Annual Red Wine Production-gal) x (6.2 lb-VOC/1000 gal) + (Total Annual White Wine Production-gal) x (2.5 lb-VOC/1000 gal). [District Rule 2201]
9. When used for wine storage, this tank shall be equipped with and operated with a pressure-vacuum relief valve, which shall operate within 10% of the maximum allowable working pressure of the tank, operate in accordance with the manufacturer's instructions, and be permanently labeled with the operating pressure settings. [District Rules 2201 and 4694]
10. When used for wine storage, the pressure-vacuum relief valve and storage tank shall remain in a gas-tight condition, except when the operating pressure of the tank exceeds the valve set pressure. A gas-tight condition shall be determined by measuring the gas leak in accordance with the procedures in EPA Method 21. [District Rules 2201 and 4694]
11. The temperature of the wine stored in this tank shall be maintained at or below 75 degrees Fahrenheit. For each batch of wine, the operator shall achieve the storage temperature of 75 degrees Fahrenheit or less within 60 days after completing fermentation, and shall maintain records to show when the required storage temperature of 75 degrees Fahrenheit or less was achieved. [District Rules 2201 and 4694]
12. The average fermentation temperature of each batch of must fermented in this tank shall not exceed 95 oF, calculated as the average of all temperature measurements for the batch taken at least every 12 hours over the course of the fermentation. [District Rule 2201]
13. A Three-Year Compliance Plan that demonstrates compliance with the requirements of Section 5.1 of District Rule 4694 for each year of the applicable compliance period shall be submitted to the District by no later than December 1, 2012, and every three years thereafter on or before December 1. [District Rule 4694]
14. A Three-Year Compliance Plan Verification that demonstrates that the Three-Year Compliance Plan elements are in effect shall be submitted to the District by no later than July 1, 2013, and every three years thereafter on or before July 1. [District Rule 4694]
15. An Annual Compliance Plan Demonstration that shows compliance with the applicable requirements of this rule shall be submitted to the District by no later than February 1, 2012, and every year thereafter on or before February 1. [District Rule 4694]
16. Operators using CER to mitigate fermentation emissions shall perform all monitoring and recordkeeping, as established in their approved Three-Year Compliance Plan, and shall maintain all records necessary to demonstrate compliance. [District Rule 4694]
17. Operators using District Obtained Emission Reductions (DOER) shall submit payment of DOER and administrative fees to the District no later than March 1, of the first year in the applicable compliance period. [District Rule 4694]
18. For each batch of must fermented in this tank, the operator shall record the fermentation completion date, the total gallons of must fermented, the average fermentation temperature and the uncontrolled fermentation emissions and fermentation emission reductions (calculated per the emission factors given in District Rule 4694). The information shall be recorded by the tank Permit to Operate number and by wine type, stated as either red wine or white wine. [District Rules 2201 and 4694]
19. When used for wine storage, daily throughput records, including records of filling and emptying operations, the dates of such operations, a unique identifier for each batch, the volume percent ethanol in the batch, and the volume of wine transferred, shall be maintained. [District Rules 2201 and 4694]
20. When used for wine storage, the operator shall record, on a weekly basis, the total gallons of wine contained in the tank and the maximum temperature of the stored wine. [District Rule 4694]
21. Records of total annual fermentation and total annual storage emissions, including calculation methods and parameters used, shall be maintained. [District Rule 1070 and 2201]
22. Separate annual records of total red wine and total white wine produced by fermentation at this facility, based on values reported to the Alcohol and Tobacco Tax and Trade Bureau (TTB), U.S. Department of the Treasury, shall be maintained. [District Rule 1070 and 2201]

DRAFT

CONDITIONS CONTINUE ON NEXT PAGE

23. All records shall be retained on-site for a period of at least five years and made available for District inspection upon request. [District Rules 2201 and 4694]

DRAFT

San Joaquin Valley
Air Pollution Control District

AUTHORITY TO CONSTRUCT

DRAFT

PERMIT NO: N-7855-746-0 **ISSUANCE DATE:** DRAFT

LEGAL OWNER OR OPERATOR: SUTTER HOME WINERY
MAILING ADDRESS: P O BOX 248
ST HELENA, CA 94574-0248

LOCATION: 18667 N JACOB BRACK RD
LODI, CA 95242

EQUIPMENT DESCRIPTION:
366,000 GALLON WHITE WINE FERMENTATION TANK AND WINE STORAGE TANK (TANK 1507) WITH PRESSURE/VACUUM VALVE AND INSULATION

CONDITIONS

1. {98} No air contaminant shall be released into the atmosphere which causes a public nuisance. [District Rule 4102]
2. The VOC emissions rate for fermentation operations in this tank shall not exceed 1.62 lb/day per 1000 gallons of tank capacity. [District Rule 2201]
3. The ethanol content of wine stored in this tank shall not exceed 23.9 percent by volume. [District Rule 2201]
4. When this tank is used for wine storage, the daily tank throughput, in gallons, shall not exceed five times the maximum nominal tank capacity stated on the equipment description. [District Rule 2201]
5. Total combined annual VOC emissions from all wine fermentation and wine storage operations at this facility shall not exceed 292,950 lb. [District Rule 2201]
6. Combined annual VOC emissions from all wine storage operations shall be determined as the sum of the emissions for each individual wine movement based on the volume transferred in each wine movement and the batch-specific wine storage emission factor calculated using the equation(s) specified within this permit. [District Rule 2201]
7. The annual VOC wine storage emission factor (EF) for each wine transfer shall be selected from the following emission factors based on the ethanol content of the wine transferred: For wine with ethanol content less than 14 volume percent: EF = 0.198 lb-VOC/1000 gallons; For wine with ethanol content between 14 and 21 volume percent, EF = 0.314 lb-VOC/1000 gallons; For wine with ethanol content greater than 21 volume percent, EF = 0.363 lb-VOC/1000 gallon. [District Rule 2201]

CONDITIONS CONTINUE ON NEXT PAGE

YOU MUST NOTIFY THE DISTRICT COMPLIANCE DIVISION AT (209) 557-6400 WHEN CONSTRUCTION IS COMPLETED AND PRIOR TO OPERATING THE EQUIPMENT OR MODIFICATIONS AUTHORIZED BY THIS AUTHORITY TO CONSTRUCT. This is NOT a PERMIT TO OPERATE. Approval or denial of a PERMIT TO OPERATE will be made after an inspection to verify that the equipment has been constructed in accordance with the approved plans, specifications and conditions of this Authority to Construct, and to determine if the equipment can be operated in compliance with all Rules and Regulations of the San Joaquin Valley Unified Air Pollution Control District. Unless construction has commenced pursuant to Rule 2050, this Authority to Construct shall expire and application shall be cancelled two years from the date of issuance. The applicant is responsible for complying with all laws, ordinances and regulations of all other governmental agencies which may pertain to the above equipment.

Seyed Sadredin, Executive Director / APCO

DRAFT

DAVID WARNER, Director of Permit Services
N-7855-746-0 : Mar 23 2011 1:27PM – ROBERTSD : Joint Inspection NOT Required

8. Total annual VOC emissions from wine fermentation operations shall be determined by the following formula: Total annual VOC emissions = (Total Annual Red Wine Production-gal) x (6.2 lb-VOC/1000 gal) + (Total Annual White Wine Production-gal) x (2.5 lb-VOC/1000 gal). [District Rule 2201]

9. When used for wine storage, this tank shall be equipped with and operated with a pressure-vacuum relief valve, which shall operate within 10% of the maximum allowable working pressure of the tank, operate in accordance with the manufacturer's instructions, and be permanently labeled with the operating pressure settings. [District Rules 2201 and 4694]

10. When used for wine storage, the pressure-vacuum relief valve and storage tank shall remain in a gas-tight condition, except when the operating pressure of the tank exceeds the valve set pressure. A gas-tight condition shall be determined by measuring the gas leak in accordance with the procedures in EPA Method 21. [District Rules 2201 and 4694]

11. The temperature of the wine stored in this tank shall be maintained at or below 75 degrees Fahrenheit. For each batch of wine, the operator shall achieve the storage temperature of 75 degrees Fahrenheit or less within 60 days after completing fermentation, and shall maintain records to show when the required storage temperature of 75 degrees Fahrenheit or less was achieved. [District Rules 2201 and 4694]

12. The average fermentation temperature of each batch of must fermented in this tank shall not exceed 95 oF, calculated as the average of all temperature measurements for the batch taken at least every 12 hours over the course of the fermentation. [District Rule 2201]

13. A Three-Year Compliance Plan that demonstrates compliance with the requirements of Section 5.1 of District Rule 4694 for each year of the applicable compliance period shall be submitted to the District by no later than December 1, 2012, and every three years thereafter on or before December 1. [District Rule 4694]

14. A Three-Year Compliance Plan Verification that demonstrates that the Three-Year Compliance Plan elements are in effect shall be submitted to the District by no later than July 1, 2013, and every three years thereafter on or before July 1. [District Rule 4694]

15. An Annual Compliance Plan Demonstration that shows compliance with the applicable requirements of this rule shall be submitted to the District by no later than February 1, 2012, and every year thereafter on or before February 1. [District Rule 4694]

16. Operators using CER to mitigate fermentation emissions shall perform all monitoring and recordkeeping, as established in their approved Three-Year Compliance Plan, and shall maintain all records necessary to demonstrate compliance. [District Rule 4694]

17. Operators using District Obtained Emission Reductions (DOER) shall submit payment of DOER and administrative fees to the District no later than March 1, of the first year in the applicable compliance period. [District Rule 4694]

18. For each batch of must fermented in this tank, the operator shall record the fermentation completion date, the total gallons of must fermented, the average fermentation temperature and the uncontrolled fermentation emissions and fermentation emission reductions (calculated per the emission factors given in District Rule 4694). The information shall be recorded by the tank Permit to Operate number and by wine type, stated as either red wine or white wine. [District Rules 2201 and 4694]

19. When used for wine storage, daily throughput records, including records of filling and emptying operations, the dates of such operations, a unique identifier for each batch, the volume percent ethanol in the batch, and the volume of wine transferred, shall be maintained. [District Rules 2201 and 4694]

20. When used for wine storage, the operator shall record, on a weekly basis, the total gallons of wine contained in the tank and the maximum temperature of the stored wine. [District Rule 4694]

21. Records of total annual fermentation and total annual storage emissions, including calculation methods and parameters used, shall be maintained. [District Rule 1070 and 2201]

22. Separate annual records of total red wine and total white wine produced by fermentation at this facility, based on values reported to the Alcohol and Tobacco Tax and Trade Bureau (TTB), U.S. Department of the Treasury, shall be maintained. [District Rule 1070 and 2201]

DRAFT

CONDITIONS CONTINUE ON NEXT PAGE

23. All records shall be retained on-site for a period of at least five years and made available for District inspection upon request. [District Rules 2201 and 4694]

DRAFT

San Joaquin Valley
Air Pollution Control District

AUTHORITY TO CONSTRUCT

DRAFT

PERMIT NO: N-7855-747-0 **ISSUANCE DATE:** DRAFT

LEGAL OWNER OR OPERATOR: SUTTER HOME WINERY
MAILING ADDRESS: P O BOX 248
ST HELENA, CA 94574-0248

LOCATION: 18667 N JACOB BRACK RD
LODI, CA 95242

EQUIPMENT DESCRIPTION:
20,219 GALLON WHITE WINE FERMENTATION TANK AND WINE STORAGE TANK (TANK 2100) WITH PRESSURE/VACUUM VALVE AND INSULATION

CONDITIONS

1. {98} No air contaminant shall be released into the atmosphere which causes a public nuisance. [District Rule 4102]
2. The VOC emissions rate for fermentation operations in this tank shall not exceed 1.62 lb/day per 1000 gallons of tank capacity. [District Rule 2201]
3. The ethanol content of wine stored in this tank shall not exceed 23.9 percent by volume. [District Rule 2201]
4. When this tank is used for wine storage, the daily tank throughput, in gallons, shall not exceed five times the maximum nominal tank capacity stated on the equipment description. [District Rule 2201]
5. Total combined annual VOC emissions from all wine fermentation and wine storage operations at this facility shall not exceed 292,950 lb. [District Rule 2201]
6. Combined annual VOC emissions from all wine storage operations shall be determined as the sum of the emissions for each individual wine movement based on the volume transferred in each wine movement and the batch-specific wine storage emission factor calculated using the equation(s) specified within this permit. [District Rule 2201]
7. The annual VOC wine storage emission factor (EF) for each wine transfer shall be selected from the following emission factors based on the ethanol content of the wine transferred: For wine with ethanol content less than 14 volume percent: EF = 0.198 lb-VOC/1000 gallons; For wine with ethanol content between 14 and 21 volume percent, EF = 0.314 lb-VOC/1000 gallons; For wine with ethanol content greater than 21 volume percent, EF = 0.363 lb-VOC/1000 gallon. [District Rule 2201]

CONDITIONS CONTINUE ON NEXT PAGE

YOU MUST NOTIFY THE DISTRICT COMPLIANCE DIVISION AT (209) 557-6400 WHEN CONSTRUCTION IS COMPLETED AND PRIOR TO OPERATING THE EQUIPMENT OR MODIFICATIONS AUTHORIZED BY THIS AUTHORITY TO CONSTRUCT. This is NOT a PERMIT TO OPERATE. Approval or denial of a PERMIT TO OPERATE will be made after an inspection to verify that the equipment has been constructed in accordance with the approved plans, specifications and conditions of this Authority to Construct, and to determine if the equipment can be operated in compliance with all Rules and Regulations of the San Joaquin Valley Unified Air Pollution Control District. Unless construction has commenced pursuant to Rule 2050, this Authority to Construct shall expire and application shall be cancelled two years from the date of issuance. The applicant is responsible for complying with all laws, ordinances and regulations of all other governmental agencies which may pertain to the above equipment.

Seyed Sadredin, Executive Director/APCO

DRAFT

DAVID WARNER, Director of Permit Services
N-7855-747-0 : Mar 23 2011 1:27PM – ROBERTSD : Joint Inspection NOT Required

8. Total annual VOC emissions from wine fermentation operations shall be determined by the following formula: Total annual VOC emissions = (Total Annual Red Wine Production-gal) x (6.2 lb-VOC/1000 gal) + (Total Annual White Wine Production-gal) x (2.5 lb-VOC/1000 gal). [District Rule 2201]

9. When used for wine storage, this tank shall be equipped with and operated with a pressure-vacuum relief valve, which shall operate within 10% of the maximum allowable working pressure of the tank, operate in accordance with the manufacturer's instructions, and be permanently labeled with the operating pressure settings. [District Rules 2201 and 4694]

10. When used for wine storage, the pressure-vacuum relief valve and storage tank shall remain in a gas-tight condition, except when the operating pressure of the tank exceeds the valve set pressure. A gas-tight condition shall be determined by measuring the gas leak in accordance with the procedures in EPA Method 21. [District Rules 2201 and 4694]

11. The temperature of the wine stored in this tank shall be maintained at or below 75 degrees Fahrenheit. For each batch of wine, the operator shall achieve the storage temperature of 75 degrees Fahrenheit or less within 60 days after completing fermentation, and shall maintain records to show when the required storage temperature of 75 degrees Fahrenheit or less was achieved. [District Rules 2201 and 4694]

12. The average fermentation temperature of each batch of must fermented in this tank shall not exceed 95 oF, calculated as the average of all temperature measurements for the batch taken at least every 12 hours over the course of the fermentation. [District Rule 2201]

13. A Three-Year Compliance Plan that demonstrates compliance with the requirements of Section 5.1 of District Rule 4694 for each year of the applicable compliance period shall be submitted to the District by no later than December 1, 2012, and every three years thereafter on or before December 1. [District Rule 4694]

14. A Three-Year Compliance Plan Verification that demonstrates that the Three-Year Compliance Plan elements are in effect shall be submitted to the District by no later than July 1, 2013, and every three years thereafter on or before July 1. [District Rule 4694]

15. An Annual Compliance Plan Demonstration that shows compliance with the applicable requirements of this rule shall be submitted to the District by no later than February 1, 2012, and every year thereafter on or before February 1. [District Rule 4694]

16. Operators using CER to mitigate fermentation emissions shall perform all monitoring and recordkeeping, as established in their approved Three-Year Compliance Plan, and shall maintain all records necessary to demonstrate compliance. [District Rule 4694]

17. Operators using District Obtained Emission Reductions (DOER) shall submit payment of DOER and administrative fees to the District no later than March 1, of the first year in the applicable compliance period. [District Rule 4694]

18. For each batch of must fermented in this tank, the operator shall record the fermentation completion date, the total gallons of must fermented, the average fermentation temperature and the uncontrolled fermentation emissions and fermentation emission reductions (calculated per the emission factors given in District Rule 4694). The information shall be recorded by the tank Permit to Operate number and by wine type, stated as either red wine or white wine. [District Rules 2201 and 4694]

19. When used for wine storage, daily throughput records, including records of filling and emptying operations, the dates of such operations, a unique identifier for each batch, the volume percent ethanol in the batch, and the volume of wine transferred, shall be maintained. [District Rules 2201 and 4694]

20. When used for wine storage, the operator shall record, on a weekly basis, the total gallons of wine contained in the tank and the maximum temperature of the stored wine. [District Rule 4694]

21. Records of total annual fermentation and total annual storage emissions, including calculation methods and parameters used, shall be maintained. [District Rule 1070 and 2201]

22. Separate annual records of total red wine and total white wine produced by fermentation at this facility, based on values reported to the Alcohol and Tobacco Tax and Trade Bureau (TTB), U.S. Department of the Treasury, shall be maintained. [District Rule 1070 and 2201]

DRAFT

CONDITIONS CONTINUE ON NEXT PAGE

23. All records shall be retained on-site for a period of at least five years and made available for District inspection upon request. [District Rules 2201 and 4694]

DRAFT

San Joaquin Valley
Air Pollution Control District

AUTHORITY TO CONSTRUCT

DRAFT

PERMIT NO: N-7855-748-0 **ISSUANCE DATE:** DRAFT

LEGAL OWNER OR OPERATOR: SUTTER HOME WINERY
MAILING ADDRESS: P O BOX 248
ST HELENA, CA 94574-0248

LOCATION: 18667 N JACOB BRACK RD
LODI, CA 95242

EQUIPMENT DESCRIPTION:
20,219 GALLON WHITE WINE FERMENTATION TANK AND WINE STORAGE TANK (TANK 2101) WITH PRESSURE/VACUUM VALVE AND INSULATION

CONDITIONS

1. {98} No air contaminant shall be released into the atmosphere which causes a public nuisance. [District Rule 4102]
2. The VOC emissions rate for fermentation operations in this tank shall not exceed 1.62 lb/day per 1000 gallons of tank capacity. [District Rule 2201]
3. The ethanol content of wine stored in this tank shall not exceed 23.9 percent by volume. [District Rule 2201]
4. When this tank is used for wine storage, the daily tank throughput, in gallons, shall not exceed five times the maximum nominal tank capacity stated on the equipment description. [District Rule 2201]
5. Total combined annual VOC emissions from all wine fermentation and wine storage operations at this facility shall not exceed 292,950 lb. [District Rule 2201]
6. Combined annual VOC emissions from all wine storage operations shall be determined as the sum of the emissions for each individual wine movement based on the volume transferred in each wine movement and the batch-specific wine storage emission factor calculated using the equation(s) specified within this permit. [District Rule 2201]
7. The annual VOC wine storage emission factor (EF) for each wine transfer shall be selected from the following emission factors based on the ethanol content of the wine transferred: For wine with ethanol content less than 14 volume percent: EF = 0.198 lb-VOC/1000 gallons; For wine with ethanol content between 14 and 21 volume percent, EF = 0.314 lb-VOC/1000 gallons; For wine with ethanol content greater than 21 volume percent, EF = 0.363 lb-VOC/1000 gallon. [District Rule 2201]

CONDITIONS CONTINUE ON NEXT PAGE

YOU MUST NOTIFY THE DISTRICT COMPLIANCE DIVISION AT (209) 557-6400 WHEN CONSTRUCTION IS COMPLETED AND PRIOR TO OPERATING THE EQUIPMENT OR MODIFICATIONS AUTHORIZED BY THIS AUTHORITY TO CONSTRUCT. This is NOT a PERMIT TO OPERATE. Approval or denial of a PERMIT TO OPERATE will be made after an inspection to verify that the equipment has been constructed in accordance with the approved plans, specifications and conditions of this Authority to Construct, and to determine if the equipment can be operated in compliance with all Rules and Regulations of the San Joaquin Valley Unified Air Pollution Control District. Unless construction has commenced pursuant to Rule 2050, this Authority to Construct shall expire and application shall be cancelled two years from the date of issuance. The applicant is responsible for complying with all laws, ordinances and regulations of all other governmental agencies which may pertain to the above equipment.

Seyed Sadredin, Executive Director / APCO

DRAFT

DAVID WARNER, Director of Permit Services
N-7855-748-0 : Mar 23 2011 1:27PM -- ROBERTSD : Joint Inspection NOT Required

8. Total annual VOC emissions from wine fermentation operations shall be determined by the following formula: Total annual VOC emissions = (Total Annual Red Wine Production-gal) x (6.2 lb-VOC/1000 gal) + (Total Annual White Wine Production-gal) x (2.5 lb-VOC/1000 gal). [District Rule 2201]

9. When used for wine storage, this tank shall be equipped with and operated with a pressure-vacuum relief valve, which shall operate within 10% of the maximum allowable working pressure of the tank, operate in accordance with the manufacturer's instructions, and be permanently labeled with the operating pressure settings. [District Rules 2201 and 4694]

10. When used for wine storage, the pressure-vacuum relief valve and storage tank shall remain in a gas-tight condition, except when the operating pressure of the tank exceeds the valve set pressure. A gas-tight condition shall be determined by measuring the gas leak in accordance with the procedures in EPA Method 21. [District Rules 2201 and 4694]

11. The temperature of the wine stored in this tank shall be maintained at or below 75 degrees Fahrenheit. For each batch of wine, the operator shall achieve the storage temperature of 75 degrees Fahrenheit or less within 60 days after completing fermentation, and shall maintain records to show when the required storage temperature of 75 degrees Fahrenheit or less was achieved. [District Rules 2201 and 4694]

12. The average fermentation temperature of each batch of must fermented in this tank shall not exceed 95 oF, calculated as the average of all temperature measurements for the batch taken at least every 12 hours over the course of the fermentation. [District Rule 2201]

13. A Three-Year Compliance Plan that demonstrates compliance with the requirements of Section 5.1 of District Rule 4694 for each year of the applicable compliance period shall be submitted to the District by no later than December 1, 2012, and every three years thereafter on or before December 1. [District Rule 4694]

14. A Three-Year Compliance Plan Verification that demonstrates that the Three-Year Compliance Plan elements are in effect shall be submitted to the District by no later than July 1, 2013, and every three years thereafter on or before July 1. [District Rule 4694]

15. An Annual Compliance Plan Demonstration that shows compliance with the applicable requirements of this rule shall be submitted to the District by no later than February 1, 2012, and every year thereafter on or before February 1. [District Rule 4694]

16. Operators using CER to mitigate fermentation emissions shall perform all monitoring and recordkeeping, as established in their approved Three-Year Compliance Plan, and shall maintain all records necessary to demonstrate compliance. [District Rule 4694]

17. Operators using District Obtained Emission Reductions (DOER) shall submit payment of DOER and administrative fees to the District no later than March 1, of the first year in the applicable compliance period. [District Rule 4694]

18. For each batch of must fermented in this tank, the operator shall record the fermentation completion date, the total gallons of must fermented, the average fermentation temperature and the uncontrolled fermentation emissions and fermentation emission reductions (calculated per the emission factors given in District Rule 4694). The information shall be recorded by the tank Permit to Operate number and by wine type, stated as either red wine or white wine. [District Rules 2201 and 4694]

19. When used for wine storage, daily throughput records, including records of filling and emptying operations, the dates of such operations, a unique identifier for each batch, the volume percent ethanol in the batch, and the volume of wine transferred, shall be maintained. [District Rules 2201 and 4694]

20. When used for wine storage, the operator shall record, on a weekly basis, the total gallons of wine contained in the tank and the maximum temperature of the stored wine. [District Rule 4694]

21. Records of total annual fermentation and total annual storage emissions, including calculation methods and parameters used, shall be maintained. [District Rule 1070 and 2201]

22. Separate annual records of total red wine and total white wine produced by fermentation at this facility, based on values reported to the Alcohol and Tobacco Tax and Trade Bureau (TTB), U.S. Department of the Treasury, shall be maintained. [District Rule 1070 and 2201]

DRAFT

CONDITIONS CONTINUE ON NEXT PAGE

23. All records shall be retained on-site for a period of at least five years and made available for District inspection upon request. [District Rules 2201 and 4694]

DRAFT

San Joaquin Valley
Air Pollution Control District

AUTHORITY TO CONSTRUCT

DRAFT

PERMIT NO: N-7855-749-0 **ISSUANCE DATE:** DRAFT

LEGAL OWNER OR OPERATOR: SUTTER HOME WINERY
MAILING ADDRESS: P O BOX 248
ST HELENA, CA 94574-0248

LOCATION: 18667 N JACOB BRACK RD
LODI, CA 95242

EQUIPMENT DESCRIPTION:
20,219 GALLON WHITE WINE FERMENTATION TANK AND WINE STORAGE TANK (TANK 2102) WITH PRESSURE/VACUUM VALVE AND INSULATION

CONDITIONS

1. {98} No air contaminant shall be released into the atmosphere which causes a public nuisance. [District Rule 4102]
2. The VOC emissions rate for fermentation operations in this tank shall not exceed 1.62 lb/day per 1000 gallons of tank capacity. [District Rule 2201]
3. The ethanol content of wine stored in this tank shall not exceed 23.9 percent by volume. [District Rule 2201]
4. When this tank is used for wine storage, the daily tank throughput, in gallons, shall not exceed five times the maximum nominal tank capacity stated on the equipment description. [District Rule 2201]
5. Total combined annual VOC emissions from all wine fermentation and wine storage operations at this facility shall not exceed 292,950 lb. [District Rule 2201]
6. Combined annual VOC emissions from all wine storage operations shall be determined as the sum of the emissions for each individual wine movement based on the volume transferred in each wine movement and the batch-specific wine storage emission factor calculated using the equation(s) specified within this permit. [District Rule 2201]
7. The annual VOC wine storage emission factor (EF) for each wine transfer shall be selected from the following emission factors based on the ethanol content of the wine transferred: For wine with ethanol content less than 14 volume percent: EF = 0.198 lb-VOC/1000 gallons; For wine with ethanol content between 14 and 21 volume percent, EF = 0.314 lb-VOC/1000 gallons; For wine with ethanol content greater than 21 volume percent, EF = 0.363 lb-VOC/1000 gallon. [District Rule 2201]

CONDITIONS CONTINUE ON NEXT PAGE

YOU MUST NOTIFY THE DISTRICT COMPLIANCE DIVISION AT (209) 557-6400 WHEN CONSTRUCTION IS COMPLETED AND PRIOR TO OPERATING THE EQUIPMENT OR MODIFICATIONS AUTHORIZED BY THIS AUTHORITY TO CONSTRUCT. This is NOT a PERMIT TO OPERATE. Approval or denial of a PERMIT TO OPERATE will be made after an inspection to verify that the equipment has been constructed in accordance with the approved plans, specifications and conditions of this Authority to Construct, and to determine if the equipment can be operated in compliance with all Rules and Regulations of the San Joaquin Valley Unified Air Pollution Control District. Unless construction has commenced pursuant to Rule 2050, this Authority to Construct shall expire and application shall be cancelled two years from the date of issuance. The applicant is responsible for complying with all laws, ordinances and regulations of all other governmental agencies which may pertain to the above equipment.

Seyed Sadredin, Executive Director / APCO

DRAFT

DAVID WARNER, Director of Permit Services
N-7855-749-0 : Mar 23 2011 1:27PM – ROBERTSD : Joint Inspection NOT Required

8. Total annual VOC emissions from wine fermentation operations shall be determined by the following formula: Total annual VOC emissions = (Total Annual Red Wine Production-gal) x (6.2 lb-VOC/1000 gal) + (Total Annual White Wine Production-gal) x (2.5 lb-VOC/1000 gal). [District Rule 2201]
9. When used for wine storage, this tank shall be equipped with and operated with a pressure-vacuum relief valve, which shall operate within 10% of the maximum allowable working pressure of the tank, operate in accordance with the manufacturer's instructions, and be permanently labeled with the operating pressure settings. [District Rules 2201 and 4694]
10. When used for wine storage, the pressure-vacuum relief valve and storage tank shall remain in a gas-tight condition, except when the operating pressure of the tank exceeds the valve set pressure. A gas-tight condition shall be determined by measuring the gas leak in accordance with the procedures in EPA Method 21. [District Rules 2201 and 4694]
11. The temperature of the wine stored in this tank shall be maintained at or below 75 degrees Fahrenheit. For each batch of wine, the operator shall achieve the storage temperature of 75 degrees Fahrenheit or less within 60 days after completing fermentation, and shall maintain records to show when the required storage temperature of 75 degrees Fahrenheit or less was achieved. [District Rules 2201 and 4694]
12. The average fermentation temperature of each batch of must fermented in this tank shall not exceed 95 oF, calculated as the average of all temperature measurements for the batch taken at least every 12 hours over the course of the fermentation. [District Rule 2201]
13. A Three-Year Compliance Plan that demonstrates compliance with the requirements of Section 5.1 of District Rule 4694 for each year of the applicable compliance period shall be submitted to the District by no later than December 1, 2012, and every three years thereafter on or before December 1. [District Rule 4694]
14. A Three-Year Compliance Plan Verification that demonstrates that the Three-Year Compliance Plan elements are in effect shall be submitted to the District by no later than July 1, 2013, and every three years thereafter on or before July 1. [District Rule 4694]
15. An Annual Compliance Plan Demonstration that shows compliance with the applicable requirements of this rule shall be submitted to the District by no later than February 1, 2012, and every year thereafter on or before February 1. [District Rule 4694]
16. Operators using CER to mitigate fermentation emissions shall perform all monitoring and recordkeeping, as established in their approved Three-Year Compliance Plan, and shall maintain all records necessary to demonstrate compliance. [District Rule 4694]
17. Operators using District Obtained Emission Reductions (DOER) shall submit payment of DOER and administrative fees to the District no later than March 1, of the first year in the applicable compliance period. [District Rule 4694]
18. For each batch of must fermented in this tank, the operator shall record the fermentation completion date, the total gallons of must fermented, the average fermentation temperature and the uncontrolled fermentation emissions and fermentation emission reductions (calculated per the emission factors given in District Rule 4694). The information shall be recorded by the tank Permit to Operate number and by wine type, stated as either red wine or white wine. [District Rules 2201 and 4694]
19. When used for wine storage, daily throughput records, including records of filling and emptying operations, the dates of such operations, a unique identifier for each batch, the volume percent ethanol in the batch, and the volume of wine transferred, shall be maintained. [District Rules 2201 and 4694]
20. When used for wine storage, the operator shall record, on a weekly basis, the total gallons of wine contained in the tank and the maximum temperature of the stored wine. [District Rule 4694]
21. Records of total annual fermentation and total annual storage emissions, including calculation methods and parameters used, shall be maintained. [District Rule 1070 and 2201]
22. Separate annual records of total red wine and total white wine produced by fermentation at this facility, based on values reported to the Alcohol and Tobacco Tax and Trade Bureau (TTB), U.S. Department of the Treasury, shall be maintained. [District Rule 1070 and 2201]

DRAFT

CONDITIONS CONTINUE ON NEXT PAGE

23. All records shall be retained on-site for a period of at least five years and made available for District inspection upon request. [District Rules 2201 and 4694]

DRAFT

San Joaquin Valley
Air Pollution Control District

AUTHORITY TO CONSTRUCT

DRAFT

PERMIT NO: N-7855-750-0 **ISSUANCE DATE:** DRAFT

LEGAL OWNER OR OPERATOR: SUTTER HOME WINERY
MAILING ADDRESS: P O BOX 248
ST HELENA, CA 94574-0248

LOCATION: 18667 N JACOB BRACK RD
LODI, CA 95242

EQUIPMENT DESCRIPTION:
20,219 GALLON WHITE WINE FERMENTATION TANK AND WINE STORAGE TANK (TANK 2103) WITH PRESSURE/VACUUM VALVE AND INSULATION

CONDITIONS

1. {98} No air contaminant shall be released into the atmosphere which causes a public nuisance. [District Rule 4102]
2. The VOC emissions rate for fermentation operations in this tank shall not exceed 1.62 lb/day per 1000 gallons of tank capacity. [District Rule 2201]
3. The ethanol content of wine stored in this tank shall not exceed 23.9 percent by volume. [District Rule 2201]
4. When this tank is used for wine storage, the daily tank throughput, in gallons, shall not exceed five times the maximum nominal tank capacity stated on the equipment description. [District Rule 2201]
5. Total combined annual VOC emissions from all wine fermentation and wine storage operations at this facility shall not exceed 292,950 lb. [District Rule 2201]
6. Combined annual VOC emissions from all wine storage operations shall be determined as the sum of the emissions for each individual wine movement based on the volume transferred in each wine movement and the batch-specific wine storage emission factor calculated using the equation(s) specified within this permit. [District Rule 2201]
7. The annual VOC wine storage emission factor (EF) for each wine transfer shall be selected from the following emission factors based on the ethanol content of the wine transferred: For wine with ethanol content less than 14 volume percent: EF = 0.198 lb-VOC/1000 gallons; For wine with ethanol content between 14 and 21 volume percent, EF = 0.314 lb-VOC/1000 gallons; For wine with ethanol content greater than 21 volume percent, EF = 0.363 lb-VOC/1000 gallon. [District Rule 2201]

CONDITIONS CONTINUE ON NEXT PAGE

YOU MUST NOTIFY THE DISTRICT COMPLIANCE DIVISION AT (209) 557-6400 WHEN CONSTRUCTION IS COMPLETED AND PRIOR TO OPERATING THE EQUIPMENT OR MODIFICATIONS AUTHORIZED BY THIS AUTHORITY TO CONSTRUCT. This is NOT a PERMIT TO OPERATE. Approval or denial of a PERMIT TO OPERATE will be made after an inspection to verify that the equipment has been constructed in accordance with the approved plans, specifications and conditions of this Authority to Construct, and to determine if the equipment can be operated in compliance with all Rules and Regulations of the San Joaquin Valley Unified Air Pollution Control District. Unless construction has commenced pursuant to Rule 2050, this Authority to Construct shall expire and application shall be cancelled two years from the date of issuance. The applicant is responsible for complying with all laws, ordinances and regulations of all other governmental agencies which may pertain to the above equipment.

Seyed Sadredin, Executive Director / APCO

DRAFT

DAVID WARNER, Director of Permit Services
N-7855-750-0 : Mar 23 2011 1:28PM – ROBERTSD : Joint Inspection NOT Required

8. Total annual VOC emissions from wine fermentation operations shall be determined by the following formula: Total annual VOC emissions = (Total Annual Red Wine Production-gal) x (6.2 lb-VOC/1000 gal) + (Total Annual White Wine Production-gal) x (2.5 lb-VOC/1000 gal). [District Rule 2201]

9. When used for wine storage, this tank shall be equipped with and operated with a pressure-vacuum relief valve, which shall operate within 10% of the maximum allowable working pressure of the tank, operate in accordance with the manufacturer's instructions, and be permanently labeled with the operating pressure settings. [District Rules 2201 and 4694]

10. When used for wine storage, the pressure-vacuum relief valve and storage tank shall remain in a gas-tight condition, except when the operating pressure of the tank exceeds the valve set pressure. A gas-tight condition shall be determined by measuring the gas leak in accordance with the procedures in EPA Method 21. [District Rules 2201 and 4694]

11. The temperature of the wine stored in this tank shall be maintained at or below 75 degrees Fahrenheit. For each batch of wine, the operator shall achieve the storage temperature of 75 degrees Fahrenheit or less within 60 days after completing fermentation, and shall maintain records to show when the required storage temperature of 75 degrees Fahrenheit or less was achieved. [District Rules 2201 and 4694]

12. The average fermentation temperature of each batch of must fermented in this tank shall not exceed 95 oF, calculated as the average of all temperature measurements for the batch taken at least every 12 hours over the course of the fermentation. [District Rule 2201]

13. A Three-Year Compliance Plan that demonstrates compliance with the requirements of Section 5.1 of District Rule 4694 for each year of the applicable compliance period shall be submitted to the District by no later than December 1, 2012, and every three years thereafter on or before December 1. [District Rule 4694]

14. A Three-Year Compliance Plan Verification that demonstrates that the Three-Year Compliance Plan elements are in effect shall be submitted to the District by no later than July 1, 2013, and every three years thereafter on or before July 1. [District Rule 4694]

15. An Annual Compliance Plan Demonstration that shows compliance with the applicable requirements of this rule shall be submitted to the District by no later than February 1, 2012, and every year thereafter on or before February 1. [District Rule 4694]

16. Operators using CER to mitigate fermentation emissions shall perform all monitoring and recordkeeping, as established in their approved Three-Year Compliance Plan, and shall maintain all records necessary to demonstrate compliance. [District Rule 4694]

17. Operators using District Obtained Emission Reductions (DOER) shall submit payment of DOER and administrative fees to the District no later than March 1, of the first year in the applicable compliance period. [District Rule 4694]

18. For each batch of must fermented in this tank, the operator shall record the fermentation completion date, the total gallons of must fermented, the average fermentation temperature and the uncontrolled fermentation emissions and fermentation emission reductions (calculated per the emission factors given in District Rule 4694). The information shall be recorded by the tank Permit to Operate number and by wine type, stated as either red wine or white wine. [District Rules 2201 and 4694]

19. When used for wine storage, daily throughput records, including records of filling and emptying operations, the dates of such operations, a unique identifier for each batch, the volume percent ethanol in the batch, and the volume of wine transferred, shall be maintained. [District Rules 2201 and 4694]

20. When used for wine storage, the operator shall record, on a weekly basis, the total gallons of wine contained in the tank and the maximum temperature of the stored wine. [District Rule 4694]

21. Records of total annual fermentation and total annual storage emissions, including calculation methods and parameters used, shall be maintained. [District Rule 1070 and 2201]

22. Separate annual records of total red wine and total white wine produced by fermentation at this facility, based on values reported to the Alcohol and Tobacco Tax and Trade Bureau (TTB), U.S. Department of the Treasury, shall be maintained. [District Rule 1070 and 2201]

DRAFT

CONDITIONS CONTINUE ON NEXT PAGE

23. All records shall be retained on-site for a period of at least five years and made available for District inspection upon request. [District Rules 2201 and 4694]

DRAFT

San Joaquin Valley
Air Pollution Control District

AUTHORITY TO CONSTRUCT

DRAFT

PERMIT NO: N-7855-751-0 **ISSUANCE DATE:** DRAFT

LEGAL OWNER OR OPERATOR: SUTTER HOME WINERY
MAILING ADDRESS: P O BOX 248
ST HELENA, CA 94574-0248

LOCATION: 18667 N JACOB BRACK RD
LODI, CA 95242

EQUIPMENT DESCRIPTION:
20,219 GALLON WHITE WINE FERMENTATION TANK AND WINE STORAGE TANK (TANK 2104) WITH PRESSURE/VACUUM VALVE AND INSULATION

CONDITIONS

1. {98} No air contaminant shall be released into the atmosphere which causes a public nuisance. [District Rule 4102]
2. The VOC emissions rate for fermentation operations in this tank shall not exceed 1.62 lb/day per 1000 gallons of tank capacity. [District Rule 2201]
3. The ethanol content of wine stored in this tank shall not exceed 23.9 percent by volume. [District Rule 2201]
4. When this tank is used for wine storage, the daily tank throughput, in gallons, shall not exceed five times the maximum nominal tank capacity stated on the equipment description. [District Rule 2201]
5. Total combined annual VOC emissions from all wine fermentation and wine storage operations at this facility shall not exceed 292,950 lb. [District Rule 2201]
6. Combined annual VOC emissions from all wine storage operations shall be determined as the sum of the emissions for each individual wine movement based on the volume transferred in each wine movement and the batch-specific wine storage emission factor calculated using the equation(s) specified within this permit. [District Rule 2201]
7. The annual VOC wine storage emission factor (EF) for each wine transfer shall be selected from the following emission factors based on the ethanol content of the wine transferred: For wine with ethanol content less than 14 volume percent: EF = 0.198 lb-VOC/1000 gallons; For wine with ethanol content between 14 and 21 volume percent, EF = 0.314 lb-VOC/1000 gallons; For wine with ethanol content greater than 21 volume percent, EF = 0.363 lb-VOC/1000 gallon. [District Rule 2201]

CONDITIONS CONTINUE ON NEXT PAGE

YOU MUST NOTIFY THE DISTRICT COMPLIANCE DIVISION AT (209) 557-6400 WHEN CONSTRUCTION IS COMPLETED AND PRIOR TO OPERATING THE EQUIPMENT OR MODIFICATIONS AUTHORIZED BY THIS AUTHORITY TO CONSTRUCT. This is NOT a PERMIT TO OPERATE. Approval or denial of a PERMIT TO OPERATE will be made after an inspection to verify that the equipment has been constructed in accordance with the approved plans, specifications and conditions of this Authority to Construct, and to determine if the equipment can be operated in compliance with all Rules and Regulations of the San Joaquin Valley Unified Air Pollution Control District. Unless construction has commenced pursuant to Rule 2050, this Authority to Construct shall expire and application shall be cancelled two years from the date of issuance. The applicant is responsible for complying with all laws, ordinances and regulations of all other governmental agencies which may pertain to the above equipment.

Seyed Sadredin, Executive Director / APCO

DRAFT

DAVID WARNER, Director of Permit Services
N-7855-751-0 : Mar 23 2011 1:28PM – ROBERTSD : Joint Inspection NOT Required

8. Total annual VOC emissions from wine fermentation operations shall be determined by the following formula: Total annual VOC emissions = (Total Annual Red Wine Production-gal) x (6.2 lb-VOC/1000 gal) + (Total Annual White Wine Production-gal) x (2.5 lb-VOC/1000 gal). [District Rule 2201]
9. When used for wine storage, this tank shall be equipped with and operated with a pressure-vacuum relief valve, which shall operate within 10% of the maximum allowable working pressure of the tank, operate in accordance with the manufacturer's instructions, and be permanently labeled with the operating pressure settings. [District Rules 2201 and 4694]
10. When used for wine storage, the pressure-vacuum relief valve and storage tank shall remain in a gas-tight condition, except when the operating pressure of the tank exceeds the valve set pressure. A gas-tight condition shall be determined by measuring the gas leak in accordance with the procedures in EPA Method 21. [District Rules 2201 and 4694]
11. The temperature of the wine stored in this tank shall be maintained at or below 75 degrees Fahrenheit. For each batch of wine, the operator shall achieve the storage temperature of 75 degrees Fahrenheit or less within 60 days after completing fermentation, and shall maintain records to show when the required storage temperature of 75 degrees Fahrenheit or less was achieved. [District Rules 2201 and 4694]
12. The average fermentation temperature of each batch of must fermented in this tank shall not exceed 95 oF, calculated as the average of all temperature measurements for the batch taken at least every 12 hours over the course of the fermentation. [District Rule 2201]
13. A Three-Year Compliance Plan that demonstrates compliance with the requirements of Section 5.1 of District Rule 4694 for each year of the applicable compliance period shall be submitted to the District by no later than December 1, 2012, and every three years thereafter on or before December 1. [District Rule 4694]
14. A Three-Year Compliance Plan Verification that demonstrates that the Three-Year Compliance Plan elements are in effect shall be submitted to the District by no later than July 1, 2013, and every three years thereafter on or before July 1. [District Rule 4694]
15. An Annual Compliance Plan Demonstration that shows compliance with the applicable requirements of this rule shall be submitted to the District by no later than February 1, 2012, and every year thereafter on or before February 1. [District Rule 4694]
16. Operators using CER to mitigate fermentation emissions shall perform all monitoring and recordkeeping, as established in their approved Three-Year Compliance Plan, and shall maintain all records necessary to demonstrate compliance. [District Rule 4694]
17. Operators using District Obtained Emission Reductions (DOER) shall submit payment of DOER and administrative fees to the District no later than March 1, of the first year in the applicable compliance period. [District Rule 4694]
18. For each batch of must fermented in this tank, the operator shall record the fermentation completion date, the total gallons of must fermented, the average fermentation temperature and the uncontrolled fermentation emissions and fermentation emission reductions (calculated per the emission factors given in District Rule 4694). The information shall be recorded by the tank Permit to Operate number and by wine type, stated as either red wine or white wine. [District Rules 2201 and 4694]
19. When used for wine storage, daily throughput records, including records of filling and emptying operations, the dates of such operations, a unique identifier for each batch, the volume percent ethanol in the batch, and the volume of wine transferred, shall be maintained. [District Rules 2201 and 4694]
20. When used for wine storage, the operator shall record, on a weekly basis, the total gallons of wine contained in the tank and the maximum temperature of the stored wine. [District Rule 4694]
21. Records of total annual fermentation and total annual storage emissions, including calculation methods and parameters used, shall be maintained. [District Rule 1070 and 2201]
22. Separate annual records of total red wine and total white wine produced by fermentation at this facility, based on values reported to the Alcohol and Tobacco Tax and Trade Bureau (TTB), U.S. Department of the Treasury, shall be maintained. [District Rule 1070 and 2201]

DRAFT

CONDITIONS CONTINUE ON NEXT PAGE

23. All records shall be retained on-site for a period of at least five years and made available for District inspection upon request. [District Rules 2201 and 4694]

DRAFT

San Joaquin Valley
Air Pollution Control District

AUTHORITY TO CONSTRUCT

DRAFT

PERMIT NO: N-7855-752-0 **ISSUANCE DATE:** DRAFT

LEGAL OWNER OR OPERATOR: SUTTER HOME WINERY
MAILING ADDRESS: P O BOX 248
ST HELENA, CA 94574-0248

LOCATION: 18667 N JACOB BRACK RD
LODI, CA 95242

EQUIPMENT DESCRIPTION:
13,487 GALLON WHITE WINE FERMENTATION TANK AND WINE STORAGE TANK (TANK 2105) WITH PRESSURE/VACUUM VALVE AND INSULATION

CONDITIONS

1. {98} No air contaminant shall be released into the atmosphere which causes a public nuisance. [District Rule 4102]
2. The VOC emissions rate for fermentation operations in this tank shall not exceed 1.62 lb/day per 1000 gallons of tank capacity. [District Rule 2201]
3. The ethanol content of wine stored in this tank shall not exceed 23.9 percent by volume. [District Rule 2201]
4. When this tank is used for wine storage, the daily tank throughput, in gallons, shall not exceed five times the maximum nominal tank capacity stated on the equipment description. [District Rule 2201]
5. Total combined annual VOC emissions from all wine fermentation and wine storage operations at this facility shall not exceed 292,950 lb. [District Rule 2201]
6. Combined annual VOC emissions from all wine storage operations shall be determined as the sum of the emissions for each individual wine movement based on the volume transferred in each wine movement and the batch-specific wine storage emission factor calculated using the equation(s) specified within this permit. [District Rule 2201]
7. The annual VOC wine storage emission factor (EF) for each wine transfer shall be selected from the following emission factors based on the ethanol content of the wine transferred: For wine with ethanol content less than 14 volume percent: EF = 0.198 lb-VOC/1000 gallons; For wine with ethanol content between 14 and 21 volume percent, EF = 0.314 lb-VOC/1000 gallons; For wine with ethanol content greater than 21 volume percent, EF = 0.363 lb-VOC/1000 gallon. [District Rule 2201]

CONDITIONS CONTINUE ON NEXT PAGE

YOU MUST NOTIFY THE DISTRICT COMPLIANCE DIVISION AT (209) 557-6400 WHEN CONSTRUCTION IS COMPLETED AND PRIOR TO OPERATING THE EQUIPMENT OR MODIFICATIONS AUTHORIZED BY THIS AUTHORITY TO CONSTRUCT. This is NOT a PERMIT TO OPERATE. Approval or denial of a PERMIT TO OPERATE will be made after an inspection to verify that the equipment has been constructed in accordance with the approved plans, specifications and conditions of this Authority to Construct, and to determine if the equipment can be operated in compliance with all Rules and Regulations of the San Joaquin Valley Unified Air Pollution Control District. Unless construction has commenced pursuant to Rule 2050, this Authority to Construct shall expire and application shall be cancelled two years from the date of issuance. The applicant is responsible for complying with all laws, ordinances and regulations of all other governmental agencies which may pertain to the above equipment.

Seyed Sadredin, Executive Director / APCO

DRAFT

DAVID WARNER, Director of Permit Services
N-7855-752-0 : Mar 23 2011 1:28PM -- ROBERTSD : Joint Inspection NOT Required

8. Total annual VOC emissions from wine fermentation operations shall be determined by the following formula: Total annual VOC emissions = (Total Annual Red Wine Production-gal) x (6.2 lb-VOC/1000 gal) + (Total Annual White Wine Production-gal) x (2.5 lb-VOC/1000 gal). [District Rule 2201]
9. When used for wine storage, this tank shall be equipped with and operated with a pressure-vacuum relief valve, which shall operate within 10% of the maximum allowable working pressure of the tank, operate in accordance with the manufacturer's instructions, and be permanently labeled with the operating pressure settings. [District Rules 2201 and 4694]
10. When used for wine storage, the pressure-vacuum relief valve and storage tank shall remain in a gas-tight condition, except when the operating pressure of the tank exceeds the valve set pressure. A gas-tight condition shall be determined by measuring the gas leak in accordance with the procedures in EPA Method 21. [District Rules 2201 and 4694]
11. The temperature of the wine stored in this tank shall be maintained at or below 75 degrees Fahrenheit. For each batch of wine, the operator shall achieve the storage temperature of 75 degrees Fahrenheit or less within 60 days after completing fermentation, and shall maintain records to show when the required storage temperature of 75 degrees Fahrenheit or less was achieved. [District Rules 2201 and 4694]
12. The average fermentation temperature of each batch of must fermented in this tank shall not exceed 95 oF, calculated as the average of all temperature measurements for the batch taken at least every 12 hours over the course of the fermentation. [District Rule 2201]
13. A Three-Year Compliance Plan that demonstrates compliance with the requirements of Section 5.1 of District Rule 4694 for each year of the applicable compliance period shall be submitted to the District by no later than December 1, 2012, and every three years thereafter on or before December 1. [District Rule 4694]
14. A Three-Year Compliance Plan Verification that demonstrates that the Three-Year Compliance Plan elements are in effect shall be submitted to the District by no later than July 1, 2013, and every three years thereafter on or before July 1. [District Rule 4694]
15. An Annual Compliance Plan Demonstration that shows compliance with the applicable requirements of this rule shall be submitted to the District by no later than February 1, 2012, and every year thereafter on or before February 1. [District Rule 4694]
16. Operators using CER to mitigate fermentation emissions shall perform all monitoring and recordkeeping, as established in their approved Three-Year Compliance Plan, and shall maintain all records necessary to demonstrate compliance. [District Rule 4694]
17. Operators using District Obtained Emission Reductions (DOER) shall submit payment of DOER and administrative fees to the District no later than March 1, of the first year in the applicable compliance period. [District Rule 4694]
18. For each batch of must fermented in this tank, the operator shall record the fermentation completion date, the total gallons of must fermented, the average fermentation temperature and the uncontrolled fermentation emissions and fermentation emission reductions (calculated per the emission factors given in District Rule 4694). The information shall be recorded by the tank Permit to Operate number and by wine type, stated as either red wine or white wine. [District Rules 2201 and 4694]
19. When used for wine storage, daily throughput records, including records of filling and emptying operations, the dates of such operations, a unique identifier for each batch, the volume percent ethanol in the batch, and the volume of wine transferred, shall be maintained. [District Rules 2201 and 4694]
20. When used for wine storage, the operator shall record, on a weekly basis, the total gallons of wine contained in the tank and the maximum temperature of the stored wine. [District Rule 4694]
21. Records of total annual fermentation and total annual storage emissions, including calculation methods and parameters used, shall be maintained. [District Rule 1070 and 2201]
22. Separate annual records of total red wine and total white wine produced by fermentation at this facility, based on values reported to the Alcohol and Tobacco Tax and Trade Bureau (TTB), U.S. Department of the Treasury, shall be maintained. [District Rule 1070 and 2201]

DRAFT

CONDITIONS CONTINUE ON NEXT PAGE

23. All records shall be retained on-site for a period of at least five years and made available for District inspection upon request. [District Rules 2201 and 4694]

DRAFT

San Joaquin Valley
Air Pollution Control District

AUTHORITY TO CONSTRUCT

DRAFT

PERMIT NO: N-7855-753-0 **ISSUANCE DATE:** DRAFT

LEGAL OWNER OR OPERATOR: SUTTER HOME WINERY
MAILING ADDRESS: P O BOX 248
ST HELENA, CA 94574-0248

LOCATION: 18667 N JACOB BRACK RD
LODI, CA 95242

EQUIPMENT DESCRIPTION:
13,487 GALLON WHITE WINE FERMENTATION TANK AND WINE STORAGE TANK (TANK 2106) WITH PRESSURE/VACUUM VALVE AND INSULATION

CONDITIONS

1. {98} No air contaminant shall be released into the atmosphere which causes a public nuisance. [District Rule 4102]
2. The VOC emissions rate for fermentation operations in this tank shall not exceed 1.62 lb/day per 1000 gallons of tank capacity. [District Rule 2201]
3. The ethanol content of wine stored in this tank shall not exceed 23.9 percent by volume. [District Rule 2201]
4. When this tank is used for wine storage, the daily tank throughput, in gallons, shall not exceed five times the maximum nominal tank capacity stated on the equipment description. [District Rule 2201]
5. Total combined annual VOC emissions from all wine fermentation and wine storage operations at this facility shall not exceed 292,950 lb. [District Rule 2201]
6. Combined annual VOC emissions from all wine storage operations shall be determined as the sum of the emissions for each individual wine movement based on the volume transferred in each wine movement and the batch-specific wine storage emission factor calculated using the equation(s) specified within this permit. [District Rule 2201]
7. The annual VOC wine storage emission factor (EF) for each wine transfer shall be selected from the following emission factors based on the ethanol content of the wine transferred: For wine with ethanol content less than 14 volume percent: EF = 0.198 lb-VOC/1000 gallons; For wine with ethanol content between 14 and 21 volume percent, EF = 0.314 lb-VOC/1000 gallons; For wine with ethanol content greater than 21 volume percent, EF = 0.363 lb-VOC/1000 gallon. [District Rule 2201]

CONDITIONS CONTINUE ON NEXT PAGE

YOU MUST NOTIFY THE DISTRICT COMPLIANCE DIVISION AT (209) 557-6400 WHEN CONSTRUCTION IS COMPLETED AND PRIOR TO OPERATING THE EQUIPMENT OR MODIFICATIONS AUTHORIZED BY THIS AUTHORITY TO CONSTRUCT. This is NOT a PERMIT TO OPERATE. Approval or denial of a PERMIT TO OPERATE will be made after an inspection to verify that the equipment has been constructed in accordance with the approved plans, specifications and conditions of this Authority to Construct, and to determine if the equipment can be operated in compliance with all Rules and Regulations of the San Joaquin Valley Unified Air Pollution Control District. Unless construction has commenced pursuant to Rule 2050, this Authority to Construct shall expire and application shall be cancelled two years from the date of issuance. The applicant is responsible for complying with all laws, ordinances and regulations of all other governmental agencies which may pertain to the above equipment.

Seyed Sadredin, Executive Director / APCO

DRAFT

DAVID WARNER, Director of Permit Services
N-7855-753-0 : Mar 23 2011 1:28PM -- ROBERTSD : Joint Inspection NOT Required

8. Total annual VOC emissions from wine fermentation operations shall be determined by the following formula: Total annual VOC emissions = (Total Annual Red Wine Production-gal) x (6.2 lb-VOC/1000 gal) + (Total Annual White Wine Production-gal) x (2.5 lb-VOC/1000 gal). [District Rule 2201]

9. When used for wine storage, this tank shall be equipped with and operated with a pressure-vacuum relief valve, which shall operate within 10% of the maximum allowable working pressure of the tank, operate in accordance with the manufacturer's instructions, and be permanently labeled with the operating pressure settings. [District Rules 2201 and 4694]

10. When used for wine storage, the pressure-vacuum relief valve and storage tank shall remain in a gas-tight condition, except when the operating pressure of the tank exceeds the valve set pressure. A gas-tight condition shall be determined by measuring the gas leak in accordance with the procedures in EPA Method 21. [District Rules 2201 and 4694]

11. The temperature of the wine stored in this tank shall be maintained at or below 75 degrees Fahrenheit. For each batch of wine, the operator shall achieve the storage temperature of 75 degrees Fahrenheit or less within 60 days after completing fermentation, and shall maintain records to show when the required storage temperature of 75 degrees Fahrenheit or less was achieved. [District Rules 2201 and 4694]

12. The average fermentation temperature of each batch of must fermented in this tank shall not exceed 95 oF, calculated as the average of all temperature measurements for the batch taken at least every 12 hours over the course of the fermentation. [District Rule 2201]

13. A Three-Year Compliance Plan that demonstrates compliance with the requirements of Section 5.1 of District Rule 4694 for each year of the applicable compliance period shall be submitted to the District by no later than December 1, 2012, and every three years thereafter on or before December 1. [District Rule 4694]

14. A Three-Year Compliance Plan Verification that demonstrates that the Three-Year Compliance Plan elements are in effect shall be submitted to the District by no later than July 1, 2013, and every three years thereafter on or before July 1. [District Rule 4694]

15. An Annual Compliance Plan Demonstration that shows compliance with the applicable requirements of this rule shall be submitted to the District by no later than February 1, 2012, and every year thereafter on or before February 1. [District Rule 4694]

16. Operators using CER to mitigate fermentation emissions shall perform all monitoring and recordkeeping, as established in their approved Three-Year Compliance Plan, and shall maintain all records necessary to demonstrate compliance. [District Rule 4694]

17. Operators using District Obtained Emission Reductions (DOER) shall submit payment of DOER and administrative fees to the District no later than March 1, of the first year in the applicable compliance period. [District Rule 4694]

18. For each batch of must fermented in this tank, the operator shall record the fermentation completion date, the total gallons of must fermented, the average fermentation temperature and the uncontrolled fermentation emissions and fermentation emission reductions (calculated per the emission factors given in District Rule 4694). The information shall be recorded by the tank Permit to Operate number and by wine type, stated as either red wine or white wine. [District Rules 2201 and 4694]

19. When used for wine storage, daily throughput records, including records of filling and emptying operations, the dates of such operations, a unique identifier for each batch, the volume percent ethanol in the batch, and the volume of wine transferred, shall be maintained. [District Rules 2201 and 4694]

20. When used for wine storage, the operator shall record, on a weekly basis, the total gallons of wine contained in the tank and the maximum temperature of the stored wine. [District Rule 4694]

21. Records of total annual fermentation and total annual storage emissions, including calculation methods and parameters used, shall be maintained. [District Rule 1070 and 2201]

22. Separate annual records of total red wine and total white wine produced by fermentation at this facility, based on values reported to the Alcohol and Tobacco Tax and Trade Bureau (TTB), U.S. Department of the Treasury, shall be maintained. [District Rule 1070 and 2201]

DRAFT

CONDITIONS CONTINUE ON NEXT PAGE

23. All records shall be retained on-site for a period of at least five years and made available for District inspection upon request. [District Rules 2201 and 4694]

DRAFT

San Joaquin Valley
Air Pollution Control District

AUTHORITY TO CONSTRUCT

DRAFT

PERMIT NO: N-7855-754-0 **ISSUANCE DATE:** DRAFT

LEGAL OWNER OR OPERATOR: SUTTER HOME WINERY
MAILING ADDRESS: P O BOX 248
ST HELENA, CA 94574-0248

LOCATION: 18667 N JACOB BRACK RD
LODI, CA 95242

EQUIPMENT DESCRIPTION:
13,487 GALLON WHITE WINE FERMENTATION TANK AND WINE STORAGE TANK (TANK 2107) WITH PRESSURE/VACUUM VALVE AND INSULATION

CONDITIONS

1. {98} No air contaminant shall be released into the atmosphere which causes a public nuisance. [District Rule 4102]
2. The VOC emissions rate for fermentation operations in this tank shall not exceed 1.62 lb/day per 1000 gallons of tank capacity. [District Rule 2201]
3. The ethanol content of wine stored in this tank shall not exceed 23.9 percent by volume. [District Rule 2201]
4. When this tank is used for wine storage, the daily tank throughput, in gallons, shall not exceed five times the maximum nominal tank capacity stated on the equipment description. [District Rule 2201]
5. Total combined annual VOC emissions from all wine fermentation and wine storage operations at this facility shall not exceed 292,950 lb. [District Rule 2201]
6. Combined annual VOC emissions from all wine storage operations shall be determined as the sum of the emissions for each individual wine movement based on the volume transferred in each wine movement and the batch-specific wine storage emission factor calculated using the equation(s) specified within this permit. [District Rule 2201]
7. The annual VOC wine storage emission factor (EF) for each wine transfer shall be selected from the following emission factors based on the ethanol content of the wine transferred: For wine with ethanol content less than 14 volume percent: EF = 0.198 lb-VOC/1000 gallons; For wine with ethanol content between 14 and 21 volume percent, EF = 0.314 lb-VOC/1000 gallons; For wine with ethanol content greater than 21 volume percent, EF = 0.363 lb-VOC/1000 gallon. [District Rule 2201]

CONDITIONS CONTINUE ON NEXT PAGE

YOU MUST NOTIFY THE DISTRICT COMPLIANCE DIVISION AT (209) 557-6400 WHEN CONSTRUCTION IS COMPLETED AND PRIOR TO OPERATING THE EQUIPMENT OR MODIFICATIONS AUTHORIZED BY THIS AUTHORITY TO CONSTRUCT. This is NOT a PERMIT TO OPERATE. Approval or denial of a PERMIT TO OPERATE will be made after an inspection to verify that the equipment has been constructed in accordance with the approved plans, specifications and conditions of this Authority to Construct, and to determine if the equipment can be operated in compliance with all Rules and Regulations of the San Joaquin Valley Unified Air Pollution Control District. Unless construction has commenced pursuant to Rule 2050, this Authority to Construct shall expire and application shall be cancelled two years from the date of issuance. The applicant is responsible for complying with all laws, ordinances and regulations of all other governmental agencies which may pertain to the above equipment.

Seyed Sadredin, Executive Director / APCO

DRAFT

DAVID WARNER, Director of Permit Services
N-7855-754-0 : Mar 23 2011 1:28PM – ROBERTSD : Joint Inspection NOT Required

8. Total annual VOC emissions from wine fermentation operations shall be determined by the following formula: Total annual VOC emissions = (Total Annual Red Wine Production-gal) x (6.2 lb-VOC/1000 gal) + (Total Annual White Wine Production-gal) x (2.5 lb-VOC/1000 gal). [District Rule 2201]

9. When used for wine storage, this tank shall be equipped with and operated with a pressure-vacuum relief valve, which shall operate within 10% of the maximum allowable working pressure of the tank, operate in accordance with the manufacturer's instructions, and be permanently labeled with the operating pressure settings. [District Rules 2201 and 4694]

10. When used for wine storage, the pressure-vacuum relief valve and storage tank shall remain in a gas-tight condition, except when the operating pressure of the tank exceeds the valve set pressure. A gas-tight condition shall be determined by measuring the gas leak in accordance with the procedures in EPA Method 21. [District Rules 2201 and 4694]

11. The temperature of the wine stored in this tank shall be maintained at or below 75 degrees Fahrenheit. For each batch of wine, the operator shall achieve the storage temperature of 75 degrees Fahrenheit or less within 60 days after completing fermentation, and shall maintain records to show when the required storage temperature of 75 degrees Fahrenheit or less was achieved. [District Rules 2201 and 4694]

12. The average fermentation temperature of each batch of must fermented in this tank shall not exceed 95 oF, calculated as the average of all temperature measurements for the batch taken at least every 12 hours over the course of the fermentation. [District Rule 2201]

13. A Three-Year Compliance Plan that demonstrates compliance with the requirements of Section 5.1 of District Rule 4694 for each year of the applicable compliance period shall be submitted to the District by no later than December 1, 2012, and every three years thereafter on or before December 1. [District Rule 4694]

14. A Three-Year Compliance Plan Verification that demonstrates that the Three-Year Compliance Plan elements are in effect shall be submitted to the District by no later than July 1, 2013, and every three years thereafter on or before July 1. [District Rule 4694]

15. An Annual Compliance Plan Demonstration that shows compliance with the applicable requirements of this rule shall be submitted to the District by no later than February 1, 2012, and every year thereafter on or before February 1. [District Rule 4694]

16. Operators using CER to mitigate fermentation emissions shall perform all monitoring and recordkeeping, as established in their approved Three-Year Compliance Plan, and shall maintain all records necessary to demonstrate compliance. [District Rule 4694]

17. Operators using District Obtained Emission Reductions (DOER) shall submit payment of DOER and administrative fees to the District no later than March 1, of the first year in the applicable compliance period. [District Rule 4694]

18. For each batch of must fermented in this tank, the operator shall record the fermentation completion date, the total gallons of must fermented, the average fermentation temperature and the uncontrolled fermentation emissions and fermentation emission reductions (calculated per the emission factors given in District Rule 4694). The information shall be recorded by the tank Permit to Operate number and by wine type, stated as either red wine or white wine. [District Rules 2201 and 4694]

19. When used for wine storage, daily throughput records, including records of filling and emptying operations, the dates of such operations, a unique identifier for each batch, the volume percent ethanol in the batch, and the volume of wine transferred, shall be maintained. [District Rules 2201 and 4694]

20. When used for wine storage, the operator shall record, on a weekly basis, the total gallons of wine contained in the tank and the maximum temperature of the stored wine. [District Rule 4694]

21. Records of total annual fermentation and total annual storage emissions, including calculation methods and parameters used, shall be maintained. [District Rule 1070 and 2201]

22. Separate annual records of total red wine and total white wine produced by fermentation at this facility, based on values reported to the Alcohol and Tobacco Tax and Trade Bureau (TTB), U.S. Department of the Treasury, shall be maintained. [District Rule 1070 and 2201]

DRAFT

CONDITIONS CONTINUE ON NEXT PAGE

23. All records shall be retained on-site for a period of at least five years and made available for District inspection upon request. [District Rules 2201 and 4694]

DRAFT

San Joaquin Valley
Air Pollution Control District

AUTHORITY TO CONSTRUCT

DRAFT

PERMIT NO: N-7855-755-0 **ISSUANCE DATE:** DRAFT

LEGAL OWNER OR OPERATOR: SUTTER HOME WINERY
MAILING ADDRESS: P O BOX 248
ST HELENA, CA 94574-0248

LOCATION: 18667 N JACOB BRACK RD
LODI, CA 95242

EQUIPMENT DESCRIPTION:
13,487 GALLON WHITE WINE FERMENTATION TANK AND WINE STORAGE TANK (TANK 2108) WITH PRESSURE/VACUUM VALVE AND INSULATION

CONDITIONS

1. {98} No air contaminant shall be released into the atmosphere which causes a public nuisance. [District Rule 4102]
2. The VOC emissions rate for fermentation operations in this tank shall not exceed 1.62 lb/day per 1000 gallons of tank capacity. [District Rule 2201]
3. The ethanol content of wine stored in this tank shall not exceed 23.9 percent by volume. [District Rule 2201]
4. When this tank is used for wine storage, the daily tank throughput, in gallons, shall not exceed five times the maximum nominal tank capacity stated on the equipment description. [District Rule 2201]
5. Total combined annual VOC emissions from all wine fermentation and wine storage operations at this facility shall not exceed 292,950 lb. [District Rule 2201]
6. Combined annual VOC emissions from all wine storage operations shall be determined as the sum of the emissions for each individual wine movement based on the volume transferred in each wine movement and the batch-specific wine storage emission factor calculated using the equation(s) specified within this permit. [District Rule 2201]
7. The annual VOC wine storage emission factor (EF) for each wine transfer shall be selected from the following emission factors based on the ethanol content of the wine transferred: For wine with ethanol content less than 14 volume percent: EF = 0.198 lb-VOC/1000 gallons; For wine with ethanol content between 14 and 21 volume percent, EF = 0.314 lb-VOC/1000 gallons; For wine with ethanol content greater than 21 volume percent, EF = 0.363 lb-VOC/1000 gallon. [District Rule 2201]

CONDITIONS CONTINUE ON NEXT PAGE

YOU MUST NOTIFY THE DISTRICT COMPLIANCE DIVISION AT (209) 557-6400 WHEN CONSTRUCTION IS COMPLETED AND PRIOR TO OPERATING THE EQUIPMENT OR MODIFICATIONS AUTHORIZED BY THIS AUTHORITY TO CONSTRUCT. This is NOT a PERMIT TO OPERATE. Approval or denial of a PERMIT TO OPERATE will be made after an inspection to verify that the equipment has been constructed in accordance with the approved plans, specifications and conditions of this Authority to Construct, and to determine if the equipment can be operated in compliance with all Rules and Regulations of the San Joaquin Valley Unified Air Pollution Control District. Unless construction has commenced pursuant to Rule 2050, this Authority to Construct shall expire and application shall be cancelled two years from the date of issuance. The applicant is responsible for complying with all laws, ordinances and regulations of all other governmental agencies which may pertain to the above equipment.

Seyed Sadredin, Executive Director / APCO

DRAFT

DAVID WARNER, Director of Permit Services
N-7855-755-0 : Mar 23 2011 1:28PM -- ROBERTSD : Joint Inspection NOT Required

8. Total annual VOC emissions from wine fermentation operations shall be determined by the following formula: Total annual VOC emissions = (Total Annual Red Wine Production-gal) x (6.2 lb-VOC/1000 gal) + (Total Annual White Wine Production-gal) x (2.5 lb-VOC/1000 gal). [District Rule 2201]

9. When used for wine storage, this tank shall be equipped with and operated with a pressure-vacuum relief valve, which shall operate within 10% of the maximum allowable working pressure of the tank, operate in accordance with the manufacturer's instructions, and be permanently labeled with the operating pressure settings. [District Rules 2201 and 4694]

10. When used for wine storage, the pressure-vacuum relief valve and storage tank shall remain in a gas-tight condition, except when the operating pressure of the tank exceeds the valve set pressure. A gas-tight condition shall be determined by measuring the gas leak in accordance with the procedures in EPA Method 21. [District Rules 2201 and 4694]

11. The temperature of the wine stored in this tank shall be maintained at or below 75 degrees Fahrenheit. For each batch of wine, the operator shall achieve the storage temperature of 75 degrees Fahrenheit or less within 60 days after completing fermentation, and shall maintain records to show when the required storage temperature of 75 degrees Fahrenheit or less was achieved. [District Rules 2201 and 4694]

12. The average fermentation temperature of each batch of must fermented in this tank shall not exceed 95 oF, calculated as the average of all temperature measurements for the batch taken at least every 12 hours over the course of the fermentation. [District Rule 2201]

13. A Three-Year Compliance Plan that demonstrates compliance with the requirements of Section 5.1 of District Rule 4694 for each year of the applicable compliance period shall be submitted to the District by no later than December 1, 2012, and every three years thereafter on or before December 1. [District Rule 4694]

14. A Three-Year Compliance Plan Verification that demonstrates that the Three-Year Compliance Plan elements are in effect shall be submitted to the District by no later than July 1, 2013, and every three years thereafter on or before July 1. [District Rule 4694]

15. An Annual Compliance Plan Demonstration that shows compliance with the applicable requirements of this rule shall be submitted to the District by no later than February 1, 2012, and every year thereafter on or before February 1. [District Rule 4694]

16. Operators using CER to mitigate fermentation emissions shall perform all monitoring and recordkeeping, as established in their approved Three-Year Compliance Plan, and shall maintain all records necessary to demonstrate compliance. [District Rule 4694]

17. Operators using District Obtained Emission Reductions (DOER) shall submit payment of DOER and administrative fees to the District no later than March 1, of the first year in the applicable compliance period. [District Rule 4694]

18. For each batch of must fermented in this tank, the operator shall record the fermentation completion date, the total gallons of must fermented, the average fermentation temperature and the uncontrolled fermentation emissions and fermentation emission reductions (calculated per the emission factors given in District Rule 4694). The information shall be recorded by the tank Permit to Operate number and by wine type, stated as either red wine or white wine. [District Rules 2201 and 4694]

19. When used for wine storage, daily throughput records, including records of filling and emptying operations, the dates of such operations, a unique identifier for each batch, the volume percent ethanol in the batch, and the volume of wine transferred, shall be maintained. [District Rules 2201 and 4694]

20. When used for wine storage, the operator shall record, on a weekly basis, the total gallons of wine contained in the tank and the maximum temperature of the stored wine. [District Rule 4694]

21. Records of total annual fermentation and total annual storage emissions, including calculation methods and parameters used, shall be maintained. [District Rule 1070 and 2201]

22. Separate annual records of total red wine and total white wine produced by fermentation at this facility, based on values reported to the Alcohol and Tobacco Tax and Trade Bureau (TTB), U.S. Department of the Treasury, shall be maintained. [District Rule 1070 and 2201]

DRAFT

CONDITIONS CONTINUE ON NEXT PAGE

23. All records shall be retained on-site for a period of at least five years and made available for District inspection upon request. [District Rules 2201 and 4694]

DRAFT

San Joaquin Valley
Air Pollution Control District

AUTHORITY TO CONSTRUCT

DRAFT

PERMIT NO: N-7855-756-0 **ISSUANCE DATE:** DRAFT

LEGAL OWNER OR OPERATOR: SUTTER HOME WINERY
MAILING ADDRESS: P O BOX 248
ST HELENA, CA 94574-0248

LOCATION: 18667 N JACOB BRACK RD
LODI, CA 95242

EQUIPMENT DESCRIPTION:
13,487 GALLON WHITE WINE FERMENTATION TANK AND WINE STORAGE TANK (TANK 2109) WITH PRESSURE/VACUUM VALVE AND INSULATION

CONDITIONS

1. {98} No air contaminant shall be released into the atmosphere which causes a public nuisance. [District Rule 4102]
2. The VOC emissions rate for fermentation operations in this tank shall not exceed 1.62 lb/day per 1000 gallons of tank capacity. [District Rule 2201]
3. The ethanol content of wine stored in this tank shall not exceed 23.9 percent by volume. [District Rule 2201]
4. When this tank is used for wine storage, the daily tank throughput, in gallons, shall not exceed five times the maximum nominal tank capacity stated on the equipment description. [District Rule 2201]
5. Total combined annual VOC emissions from all wine fermentation and wine storage operations at this facility shall not exceed 292,950 lb. [District Rule 2201]
6. Combined annual VOC emissions from all wine storage operations shall be determined as the sum of the emissions for each individual wine movement based on the volume transferred in each wine movement and the batch-specific wine storage emission factor calculated using the equation(s) specified within this permit. [District Rule 2201]
7. The annual VOC wine storage emission factor (EF) for each wine transfer shall be selected from the following emission factors based on the ethanol content of the wine transferred: For wine with ethanol content less than 14 volume percent: EF = 0.198 lb-VOC/1000 gallons; For wine with ethanol content between 14 and 21 volume percent, EF = 0.314 lb-VOC/1000 gallons; For wine with ethanol content greater than 21 volume percent, EF = 0.363 lb-VOC/1000 gallon. [District Rule 2201]

CONDITIONS CONTINUE ON NEXT PAGE

YOU MUST NOTIFY THE DISTRICT COMPLIANCE DIVISION AT (209) 557-6400 WHEN CONSTRUCTION IS COMPLETED AND PRIOR TO OPERATING THE EQUIPMENT OR MODIFICATIONS AUTHORIZED BY THIS AUTHORITY TO CONSTRUCT. This is NOT a PERMIT TO OPERATE. Approval or denial of a PERMIT TO OPERATE will be made after an inspection to verify that the equipment has been constructed in accordance with the approved plans, specifications and conditions of this Authority to Construct, and to determine if the equipment can be operated in compliance with all Rules and Regulations of the San Joaquin Valley Unified Air Pollution Control District. Unless construction has commenced pursuant to Rule 2050, this Authority to Construct shall expire and application shall be cancelled two years from the date of issuance. The applicant is responsible for complying with all laws, ordinances and regulations of all other governmental agencies which may pertain to the above equipment.

Seyed Sadredin, Executive Director / APCO

DRAFT

DAVID WARNER, Director of Permit Services
N-7855-756-0 : Mar 23 2011 1:28PM -- ROBERTSD : Joint Inspection NOT Required

8. Total annual VOC emissions from wine fermentation operations shall be determined by the following formula: Total annual VOC emissions = (Total Annual Red Wine Production-gal) x (6.2 lb-VOC/1000 gal) + (Total Annual White Wine Production-gal) x (2.5 lb-VOC/1000 gal). [District Rule 2201]
9. When used for wine storage, this tank shall be equipped with and operated with a pressure-vacuum relief valve, which shall operate within 10% of the maximum allowable working pressure of the tank, operate in accordance with the manufacturer's instructions, and be permanently labeled with the operating pressure settings. [District Rules 2201 and 4694]
10. When used for wine storage, the pressure-vacuum relief valve and storage tank shall remain in a gas-tight condition, except when the operating pressure of the tank exceeds the valve set pressure. A gas-tight condition shall be determined by measuring the gas leak in accordance with the procedures in EPA Method 21. [District Rules 2201 and 4694]
11. The temperature of the wine stored in this tank shall be maintained at or below 75 degrees Fahrenheit. For each batch of wine, the operator shall achieve the storage temperature of 75 degrees Fahrenheit or less within 60 days after completing fermentation, and shall maintain records to show when the required storage temperature of 75 degrees Fahrenheit or less was achieved. [District Rules 2201 and 4694]
12. The average fermentation temperature of each batch of must fermented in this tank shall not exceed 95 oF, calculated as the average of all temperature measurements for the batch taken at least every 12 hours over the course of the fermentation. [District Rule 2201]
13. A Three-Year Compliance Plan that demonstrates compliance with the requirements of Section 5.1 of District Rule 4694 for each year of the applicable compliance period shall be submitted to the District by no later than December 1, 2012, and every three years thereafter on or before December 1. [District Rule 4694]
14. A Three-Year Compliance Plan Verification that demonstrates that the Three-Year Compliance Plan elements are in effect shall be submitted to the District by no later than July 1, 2013, and every three years thereafter on or before July 1. [District Rule 4694]
15. An Annual Compliance Plan Demonstration that shows compliance with the applicable requirements of this rule shall be submitted to the District by no later than February 1, 2012, and every year thereafter on or before February 1. [District Rule 4694]
16. Operators using CER to mitigate fermentation emissions shall perform all monitoring and recordkeeping, as established in their approved Three-Year Compliance Plan, and shall maintain all records necessary to demonstrate compliance. [District Rule 4694]
17. Operators using District Obtained Emission Reductions (DOER) shall submit payment of DOER and administrative fees to the District no later than March 1, of the first year in the applicable compliance period. [District Rule 4694]
18. For each batch of must fermented in this tank, the operator shall record the fermentation completion date, the total gallons of must fermented, the average fermentation temperature and the uncontrolled fermentation emissions and fermentation emission reductions (calculated per the emission factors given in District Rule 4694). The information shall be recorded by the tank Permit to Operate number and by wine type, stated as either red wine or white wine. [District Rules 2201 and 4694]
19. When used for wine storage, daily throughput records, including records of filling and emptying operations, the dates of such operations, a unique identifier for each batch, the volume percent ethanol in the batch, and the volume of wine transferred, shall be maintained. [District Rules 2201 and 4694]
20. When used for wine storage, the operator shall record, on a weekly basis, the total gallons of wine contained in the tank and the maximum temperature of the stored wine. [District Rule 4694]
21. Records of total annual fermentation and total annual storage emissions, including calculation methods and parameters used, shall be maintained. [District Rule 1070 and 2201]
22. Separate annual records of total red wine and total white wine produced by fermentation at this facility, based on values reported to the Alcohol and Tobacco Tax and Trade Bureau (TTB), U.S. Department of the Treasury, shall be maintained. [District Rule 1070 and 2201]

DRAFT

CONDITIONS CONTINUE ON NEXT PAGE

23. All records shall be retained on-site for a period of at least five years and made available for District inspection upon request. [District Rules 2201 and 4694]

DRAFT

San Joaquin Valley
Air Pollution Control District

AUTHORITY TO CONSTRUCT

DRAFT

PERMIT NO: N-7855-757-0

ISSUANCE DATE: DRAFT

LEGAL OWNER OR OPERATOR: SUTTER HOME WINERY
MAILING ADDRESS: P O BOX 248
ST HELENA, CA 94574-0248

LOCATION: 18667 N JACOB BRACK RD
LODI, CA 95242

EQUIPMENT DESCRIPTION:
8,031 GALLON WHITE WINE FERMENTATION TANK AND WINE STORAGE TANK (TANK 2110) WITH PRESSURE/VACUUM VALVE AND INSULATION

CONDITIONS

1. {98} No air contaminant shall be released into the atmosphere which causes a public nuisance. [District Rule 4102]
2. The VOC emissions rate for fermentation operations in this tank shall not exceed 1.62 lb/day per 1000 gallons of tank capacity. [District Rule 2201]
3. The ethanol content of wine stored in this tank shall not exceed 23.9 percent by volume. [District Rule 2201]
4. When this tank is used for wine storage, the daily tank throughput, in gallons, shall not exceed five times the maximum nominal tank capacity stated on the equipment description. [District Rule 2201]
5. Total combined annual VOC emissions from all wine fermentation and wine storage operations at this facility shall not exceed 292,950 lb. [District Rule 2201]
6. Combined annual VOC emissions from all wine storage operations shall be determined as the sum of the emissions for each individual wine movement based on the volume transferred in each wine movement and the batch-specific wine storage emission factor calculated using the equation(s) specified within this permit. [District Rule 2201]
7. The annual VOC wine storage emission factor (EF) for each wine transfer shall be selected from the following emission factors based on the ethanol content of the wine transferred: For wine with ethanol content less than 14 volume percent: EF = 0.198 lb-VOC/1000 gallons; For wine with ethanol content between 14 and 21 volume percent, EF = 0.314 lb-VOC/1000 gallons; For wine with ethanol content greater than 21 volume percent, EF = 0.363 lb-VOC/1000 gallon. [District Rule 2201]

CONDITIONS CONTINUE ON NEXT PAGE

YOU MUST NOTIFY THE DISTRICT COMPLIANCE DIVISION AT (209) 557-6400 WHEN CONSTRUCTION IS COMPLETED AND PRIOR TO OPERATING THE EQUIPMENT OR MODIFICATIONS AUTHORIZED BY THIS AUTHORITY TO CONSTRUCT. This is NOT a PERMIT TO OPERATE. Approval or denial of a PERMIT TO OPERATE will be made after an inspection to verify that the equipment has been constructed in accordance with the approved plans, specifications and conditions of this Authority to Construct, and to determine if the equipment can be operated in compliance with all Rules and Regulations of the San Joaquin Valley Unified Air Pollution Control District. Unless construction has commenced pursuant to Rule 2050, this Authority to Construct shall expire and application shall be cancelled two years from the date of issuance. The applicant is responsible for complying with all laws, ordinances and regulations of all other governmental agencies which may pertain to the above equipment.

Seyed Sadredin, Executive Director / APCO

DRAFT

DAVID WARNER, Director of Permit Services
N-7855-757-0 : Mar 23 2011 1:28PM – ROBERTSD : Joint Inspection NOT Required

8. Total annual VOC emissions from wine fermentation operations shall be determined by the following formula: Total annual VOC emissions = (Total Annual Red Wine Production-gal) x (6.2 lb-VOC/1000 gal) + (Total Annual White Wine Production-gal) x (2.5 lb-VOC/1000 gal). [District Rule 2201]

9. When used for wine storage, this tank shall be equipped with and operated with a pressure-vacuum relief valve, which shall operate within 10% of the maximum allowable working pressure of the tank, operate in accordance with the manufacturer's instructions, and be permanently labeled with the operating pressure settings. [District Rules 2201 and 4694]

10. When used for wine storage, the pressure-vacuum relief valve and storage tank shall remain in a gas-tight condition, except when the operating pressure of the tank exceeds the valve set pressure. A gas-tight condition shall be determined by measuring the gas leak in accordance with the procedures in EPA Method 21. [District Rules 2201 and 4694]

11. The temperature of the wine stored in this tank shall be maintained at or below 75 degrees Fahrenheit. For each batch of wine, the operator shall achieve the storage temperature of 75 degrees Fahrenheit or less within 60 days after completing fermentation, and shall maintain records to show when the required storage temperature of 75 degrees Fahrenheit or less was achieved. [District Rules 2201 and 4694]

12. The average fermentation temperature of each batch of must fermented in this tank shall not exceed 95 oF, calculated as the average of all temperature measurements for the batch taken at least every 12 hours over the course of the fermentation. [District Rule 2201]

13. A Three-Year Compliance Plan that demonstrates compliance with the requirements of Section 5.1 of District Rule 4694 for each year of the applicable compliance period shall be submitted to the District by no later than December 1, 2012, and every three years thereafter on or before December 1. [District Rule 4694]

14. A Three-Year Compliance Plan Verification that demonstrates that the Three-Year Compliance Plan elements are in effect shall be submitted to the District by no later than July 1, 2013, and every three years thereafter on or before July 1. [District Rule 4694]

15. An Annual Compliance Plan Demonstration that shows compliance with the applicable requirements of this rule shall be submitted to the District by no later than February 1, 2012, and every year thereafter on or before February 1. [District Rule 4694]

16. Operators using CER to mitigate fermentation emissions shall perform all monitoring and recordkeeping, as established in their approved Three-Year Compliance Plan, and shall maintain all records necessary to demonstrate compliance. [District Rule 4694]

17. Operators using District Obtained Emission Reductions (DOER) shall submit payment of DOER and administrative fees to the District no later than March 1, of the first year in the applicable compliance period. [District Rule 4694]

18. For each batch of must fermented in this tank, the operator shall record the fermentation completion date, the total gallons of must fermented, the average fermentation temperature and the uncontrolled fermentation emissions and fermentation emission reductions (calculated per the emission factors given in District Rule 4694). The information shall be recorded by the tank Permit to Operate number and by wine type, stated as either red wine or white wine. [District Rules 2201 and 4694]

19. When used for wine storage, daily throughput records, including records of filling and emptying operations, the dates of such operations, a unique identifier for each batch, the volume percent ethanol in the batch, and the volume of wine transferred, shall be maintained. [District Rules 2201 and 4694]

20. When used for wine storage, the operator shall record, on a weekly basis, the total gallons of wine contained in the tank and the maximum temperature of the stored wine. [District Rule 4694]

21. Records of total annual fermentation and total annual storage emissions, including calculation methods and parameters used, shall be maintained. [District Rule 1070 and 2201]

22. Separate annual records of total red wine and total white wine produced by fermentation at this facility, based on values reported to the Alcohol and Tobacco Tax and Trade Bureau (TTB), U.S. Department of the Treasury, shall be maintained. [District Rule 1070 and 2201]

DRAFT

CONDITIONS CONTINUE ON NEXT PAGE

23. All records shall be retained on-site for a period of at least five years and made available for District inspection upon request. [District Rules 2201 and 4694]

DRAFT

San Joaquin Valley
Air Pollution Control District

AUTHORITY TO CONSTRUCT

DRAFT

PERMIT NO: N-7855-758-0 **ISSUANCE DATE:** DRAFT

LEGAL OWNER OR OPERATOR: SUTTER HOME WINERY
MAILING ADDRESS: P O BOX 248
ST HELENA, CA 94574-0248

LOCATION: 18667 N JACOB BRACK RD
LODI, CA 95242

EQUIPMENT DESCRIPTION:
8,031 GALLON WHITE WINE FERMENTATION TANK AND WINE STORAGE TANK (TANK 2111) WITH PRESSURE/VACUUM VALVE AND INSULATION

CONDITIONS

1. {98} No air contaminant shall be released into the atmosphere which causes a public nuisance. [District Rule 4102]
2. The VOC emissions rate for fermentation operations in this tank shall not exceed 1.62 lb/day per 1000 gallons of tank capacity. [District Rule 2201]
3. The ethanol content of wine stored in this tank shall not exceed 23.9 percent by volume. [District Rule 2201]
4. When this tank is used for wine storage, the daily tank throughput, in gallons, shall not exceed five times the maximum nominal tank capacity stated on the equipment description. [District Rule 2201]
5. Total combined annual VOC emissions from all wine fermentation and wine storage operations at this facility shall not exceed 292,950 lb. [District Rule 2201]
6. Combined annual VOC emissions from all wine storage operations shall be determined as the sum of the emissions for each individual wine movement based on the volume transferred in each wine movement and the batch-specific wine storage emission factor calculated using the equation(s) specified within this permit. [District Rule 2201]
7. The annual VOC wine storage emission factor (EF) for each wine transfer shall be selected from the following emission factors based on the ethanol content of the wine transferred: For wine with ethanol content less than 14 volume percent: EF = 0.198 lb-VOC/1000 gallons; For wine with ethanol content between 14 and 21 volume percent, EF = 0.314 lb-VOC/1000 gallons; For wine with ethanol content greater than 21 volume percent, EF = 0.363 lb-VOC/1000 gallon. [District Rule 2201]

CONDITIONS CONTINUE ON NEXT PAGE

YOU MUST NOTIFY THE DISTRICT COMPLIANCE DIVISION AT (209) 557-6400 WHEN CONSTRUCTION IS COMPLETED AND PRIOR TO OPERATING THE EQUIPMENT OR MODIFICATIONS AUTHORIZED BY THIS AUTHORITY TO CONSTRUCT. This is NOT a PERMIT TO OPERATE. Approval or denial of a PERMIT TO OPERATE will be made after an inspection to verify that the equipment has been constructed in accordance with the approved plans, specifications and conditions of this Authority to Construct, and to determine if the equipment can be operated in compliance with all Rules and Regulations of the San Joaquin Valley Unified Air Pollution Control District. Unless construction has commenced pursuant to Rule 2050, this Authority to Construct shall expire and application shall be cancelled two years from the date of issuance. The applicant is responsible for complying with all laws, ordinances and regulations of all other governmental agencies which may pertain to the above equipment.

Seyed Sadredin, Executive Director / APCO

DRAFT

DAVID WARNER, Director of Permit Services
N-7855-758-0 : Mar 23 2011 1:28PM – ROBERTSD : Joint Inspection NOT Required

8. Total annual VOC emissions from wine fermentation operations shall be determined by the following formula: Total annual VOC emissions = (Total Annual Red Wine Production-gal) x (6.2 lb-VOC/1000 gal) + (Total Annual White Wine Production-gal) x (2.5 lb-VOC/1000 gal). [District Rule 2201]

9. When used for wine storage, this tank shall be equipped with and operated with a pressure-vacuum relief valve, which shall operate within 10% of the maximum allowable working pressure of the tank, operate in accordance with the manufacturer's instructions, and be permanently labeled with the operating pressure settings. [District Rules 2201 and 4694]

10. When used for wine storage, the pressure-vacuum relief valve and storage tank shall remain in a gas-tight condition, except when the operating pressure of the tank exceeds the valve set pressure. A gas-tight condition shall be determined by measuring the gas leak in accordance with the procedures in EPA Method 21. [District Rules 2201 and 4694]

11. The temperature of the wine stored in this tank shall be maintained at or below 75 degrees Fahrenheit. For each batch of wine, the operator shall achieve the storage temperature of 75 degrees Fahrenheit or less within 60 days after completing fermentation, and shall maintain records to show when the required storage temperature of 75 degrees Fahrenheit or less was achieved. [District Rules 2201 and 4694]

12. The average fermentation temperature of each batch of must fermented in this tank shall not exceed 95 oF, calculated as the average of all temperature measurements for the batch taken at least every 12 hours over the course of the fermentation. [District Rule 2201]

13. A Three-Year Compliance Plan that demonstrates compliance with the requirements of Section 5.1 of District Rule 4694 for each year of the applicable compliance period shall be submitted to the District by no later than December 1, 2012, and every three years thereafter on or before December 1. [District Rule 4694]

14. A Three-Year Compliance Plan Verification that demonstrates that the Three-Year Compliance Plan elements are in effect shall be submitted to the District by no later than July 1, 2013, and every three years thereafter on or before July 1. [District Rule 4694]

15. An Annual Compliance Plan Demonstration that shows compliance with the applicable requirements of this rule shall be submitted to the District by no later than February 1, 2012, and every year thereafter on or before February 1. [District Rule 4694]

16. Operators using CER to mitigate fermentation emissions shall perform all monitoring and recordkeeping, as established in their approved Three-Year Compliance Plan, and shall maintain all records necessary to demonstrate compliance. [District Rule 4694]

17. Operators using District Obtained Emission Reductions (DOER) shall submit payment of DOER and administrative fees to the District no later than March 1, of the first year in the applicable compliance period. [District Rule 4694]

18. For each batch of must fermented in this tank, the operator shall record the fermentation completion date, the total gallons of must fermented, the average fermentation temperature and the uncontrolled fermentation emissions and fermentation emission reductions (calculated per the emission factors given in District Rule 4694). The information shall be recorded by the tank Permit to Operate number and by wine type, stated as either red wine or white wine. [District Rules 2201 and 4694]

19. When used for wine storage, daily throughput records, including records of filling and emptying operations, the dates of such operations, a unique identifier for each batch, the volume percent ethanol in the batch, and the volume of wine transferred, shall be maintained. [District Rules 2201 and 4694]

20. When used for wine storage, the operator shall record, on a weekly basis, the total gallons of wine contained in the tank and the maximum temperature of the stored wine. [District Rule 4694]

21. Records of total annual fermentation and total annual storage emissions, including calculation methods and parameters used, shall be maintained. [District Rule 1070 and 2201]

22. Separate annual records of total red wine and total white wine produced by fermentation at this facility, based on values reported to the Alcohol and Tobacco Tax and Trade Bureau (TTB), U.S. Department of the Treasury, shall be maintained. [District Rule 1070 and 2201]

DRAFT

CONDITIONS CONTINUE ON NEXT PAGE

23. All records shall be retained on-site for a period of at least five years and made available for District inspection upon request. [District Rules 2201 and 4694]

DRAFT

San Joaquin Valley
Air Pollution Control District

AUTHORITY TO CONSTRUCT

DRAFT

PERMIT NO: N-7855-759-0 **ISSUANCE DATE:** DRAFT

LEGAL OWNER OR OPERATOR: SUTTER HOME WINERY
MAILING ADDRESS: P O BOX 248
ST HELENA, CA 94574-0248

LOCATION: 18667 N JACOB BRACK RD
LODI, CA 95242

EQUIPMENT DESCRIPTION:
8,031 GALLON WHITE WINE FERMENTATION TANK AND WINE STORAGE TANK (TANK 2112) WITH PRESSURE/VACUUM VALVE AND INSULATION

CONDITIONS

1. {98} No air contaminant shall be released into the atmosphere which causes a public nuisance. [District Rule 4102]
2. The VOC emissions rate for fermentation operations in this tank shall not exceed 1.62 lb/day per 1000 gallons of tank capacity. [District Rule 2201]
3. The ethanol content of wine stored in this tank shall not exceed 23.9 percent by volume. [District Rule 2201]
4. When this tank is used for wine storage, the daily tank throughput, in gallons, shall not exceed five times the maximum nominal tank capacity stated on the equipment description. [District Rule 2201]
5. Total combined annual VOC emissions from all wine fermentation and wine storage operations at this facility shall not exceed 292,950 lb. [District Rule 2201]
6. Combined annual VOC emissions from all wine storage operations shall be determined as the sum of the emissions for each individual wine movement based on the volume transferred in each wine movement and the batch-specific wine storage emission factor calculated using the equation(s) specified within this permit. [District Rule 2201]
7. The annual VOC wine storage emission factor (EF) for each wine transfer shall be selected from the following emission factors based on the ethanol content of the wine transferred: For wine with ethanol content less than 14 volume percent: EF = 0.198 lb-VOC/1000 gallons; For wine with ethanol content between 14 and 21 volume percent, EF = 0.314 lb-VOC/1000 gallons; For wine with ethanol content greater than 21 volume percent, EF = 0.363 lb-VOC/1000 gallon. [District Rule 2201]

CONDITIONS CONTINUE ON NEXT PAGE

YOU MUST NOTIFY THE DISTRICT COMPLIANCE DIVISION AT (209) 557-6400 WHEN CONSTRUCTION IS COMPLETED AND PRIOR TO OPERATING THE EQUIPMENT OR MODIFICATIONS AUTHORIZED BY THIS AUTHORITY TO CONSTRUCT. This is NOT a PERMIT TO OPERATE. Approval or denial of a PERMIT TO OPERATE will be made after an inspection to verify that the equipment has been constructed in accordance with the approved plans, specifications and conditions of this Authority to Construct, and to determine if the equipment can be operated in compliance with all Rules and Regulations of the San Joaquin Valley Unified Air Pollution Control District. Unless construction has commenced pursuant to Rule 2050, this Authority to Construct shall expire and application shall be cancelled two years from the date of issuance. The applicant is responsible for complying with all laws, ordinances and regulations of all other governmental agencies which may pertain to the above equipment.

Seyed Sadredin, Executive Director / APCO

DRAFT

DAVID WARNER, Director of Permit Services
N-7855-759-0 : Mar 23 2011 1:28PM -- ROBERTSD : Joint Inspection NOT Required

8. Total annual VOC emissions from wine fermentation operations shall be determined by the following formula: Total annual VOC emissions = (Total Annual Red Wine Production-gal) x (6.2 lb-VOC/1000 gal) + (Total Annual White Wine Production-gal) x (2.5 lb-VOC/1000 gal). [District Rule 2201]
9. When used for wine storage, this tank shall be equipped with and operated with a pressure-vacuum relief valve, which shall operate within 10% of the maximum allowable working pressure of the tank, operate in accordance with the manufacturer's instructions, and be permanently labeled with the operating pressure settings. [District Rules 2201 and 4694]
10. When used for wine storage, the pressure-vacuum relief valve and storage tank shall remain in a gas-tight condition, except when the operating pressure of the tank exceeds the valve set pressure. A gas-tight condition shall be determined by measuring the gas leak in accordance with the procedures in EPA Method 21. [District Rules 2201 and 4694]
11. The temperature of the wine stored in this tank shall be maintained at or below 75 degrees Fahrenheit. For each batch of wine, the operator shall achieve the storage temperature of 75 degrees Fahrenheit or less within 60 days after completing fermentation, and shall maintain records to show when the required storage temperature of 75 degrees Fahrenheit or less was achieved. [District Rules 2201 and 4694]
12. The average fermentation temperature of each batch of must fermented in this tank shall not exceed 95 oF, calculated as the average of all temperature measurements for the batch taken at least every 12 hours over the course of the fermentation. [District Rule 2201]
13. A Three-Year Compliance Plan that demonstrates compliance with the requirements of Section 5.1 of District Rule 4694 for each year of the applicable compliance period shall be submitted to the District by no later than December 1, 2012, and every three years thereafter on or before December 1. [District Rule 4694]
14. A Three-Year Compliance Plan Verification that demonstrates that the Three-Year Compliance Plan elements are in effect shall be submitted to the District by no later than July 1, 2013, and every three years thereafter on or before July 1. [District Rule 4694]
15. An Annual Compliance Plan Demonstration that shows compliance with the applicable requirements of this rule shall be submitted to the District by no later than February 1, 2012, and every year thereafter on or before February 1. [District Rule 4694]
16. Operators using CER to mitigate fermentation emissions shall perform all monitoring and recordkeeping, as established in their approved Three-Year Compliance Plan, and shall maintain all records necessary to demonstrate compliance. [District Rule 4694]
17. Operators using District Obtained Emission Reductions (DOER) shall submit payment of DOER and administrative fees to the District no later than March 1, of the first year in the applicable compliance period. [District Rule 4694]
18. For each batch of must fermented in this tank, the operator shall record the fermentation completion date, the total gallons of must fermented, the average fermentation temperature and the uncontrolled fermentation emissions and fermentation emission reductions (calculated per the emission factors given in District Rule 4694). The information shall be recorded by the tank Permit to Operate number and by wine type, stated as either red wine or white wine. [District Rules 2201 and 4694]
19. When used for wine storage, daily throughput records, including records of filling and emptying operations, the dates of such operations, a unique identifier for each batch, the volume percent ethanol in the batch, and the volume of wine transferred, shall be maintained. [District Rules 2201 and 4694]
20. When used for wine storage, the operator shall record, on a weekly basis, the total gallons of wine contained in the tank and the maximum temperature of the stored wine. [District Rule 4694]
21. Records of total annual fermentation and total annual storage emissions, including calculation methods and parameters used, shall be maintained. [District Rule 1070 and 2201]
22. Separate annual records of total red wine and total white wine produced by fermentation at this facility, based on values reported to the Alcohol and Tobacco Tax and Trade Bureau (TTB), U.S. Department of the Treasury, shall be maintained. [District Rule 1070 and 2201]

DRAFT

CONDITIONS CONTINUE ON NEXT PAGE

23. All records shall be retained on-site for a period of at least five years and made available for District inspection upon request. [District Rules 2201 and 4694]

DRAFT

San Joaquin Valley
Air Pollution Control District

AUTHORITY TO CONSTRUCT

DRAFT

PERMIT NO: N-7855-760-0 **ISSUANCE DATE:** DRAFT

LEGAL OWNER OR OPERATOR: SUTTER HOME WINERY
MAILING ADDRESS: P O BOX 248
ST HELENA, CA 94574-0248

LOCATION: 18667 N JACOB BRACK RD
LODI, CA 95242

EQUIPMENT DESCRIPTION:
8,031 GALLON WHITE WINE FERMENTATION TANK AND WINE STORAGE TANK (TANK 2113) WITH PRESSURE/VACUUM VALVE AND INSULATION

CONDITIONS

1. {98} No air contaminant shall be released into the atmosphere which causes a public nuisance. [District Rule 4102]
2. The VOC emissions rate for fermentation operations in this tank shall not exceed 1.62 lb/day per 1000 gallons of tank capacity. [District Rule 2201]
3. The ethanol content of wine stored in this tank shall not exceed 23.9 percent by volume. [District Rule 2201]
4. When this tank is used for wine storage, the daily tank throughput, in gallons, shall not exceed five times the maximum nominal tank capacity stated on the equipment description. [District Rule 2201]
5. Total combined annual VOC emissions from all wine fermentation and wine storage operations at this facility shall not exceed 292,950 lb. [District Rule 2201]
6. Combined annual VOC emissions from all wine storage operations shall be determined as the sum of the emissions for each individual wine movement based on the volume transferred in each wine movement and the batch-specific wine storage emission factor calculated using the equation(s) specified within this permit. [District Rule 2201]
7. The annual VOC wine storage emission factor (EF) for each wine transfer shall be selected from the following emission factors based on the ethanol content of the wine transferred: For wine with ethanol content less than 14 volume percent: EF = 0.198 lb-VOC/1000 gallons; For wine with ethanol content between 14 and 21 volume percent, EF = 0.314 lb-VOC/1000 gallons; For wine with ethanol content greater than 21 volume percent, EF = 0.363 lb-VOC/1000 gallon. [District Rule 2201]

CONDITIONS CONTINUE ON NEXT PAGE

YOU MUST NOTIFY THE DISTRICT COMPLIANCE DIVISION AT (209) 557-6400 WHEN CONSTRUCTION IS COMPLETED AND PRIOR TO OPERATING THE EQUIPMENT OR MODIFICATIONS AUTHORIZED BY THIS AUTHORITY TO CONSTRUCT. This is NOT a PERMIT TO OPERATE. Approval or denial of a PERMIT TO OPERATE will be made after an inspection to verify that the equipment has been constructed in accordance with the approved plans, specifications and conditions of this Authority to Construct, and to determine if the equipment can be operated in compliance with all Rules and Regulations of the San Joaquin Valley Unified Air Pollution Control District. Unless construction has commenced pursuant to Rule 2050, this Authority to Construct shall expire and application shall be cancelled two years from the date of issuance. The applicant is responsible for complying with all laws, ordinances and regulations of all other governmental agencies which may pertain to the above equipment.

Seyed Sadredin, Executive Director / APCO

DRAFT

DAVID WARNER, Director of Permit Services
N-7855-760-0 : Mar 23 2011 1:28PM -- ROBERTSD : Joint Inspection NOT Required

8. Total annual VOC emissions from wine fermentation operations shall be determined by the following formula: Total annual VOC emissions = (Total Annual Red Wine Production-gal) x (6.2 lb-VOC/1000 gal) + (Total Annual White Wine Production-gal) x (2.5 lb-VOC/1000 gal). [District Rule 2201]

9. When used for wine storage, this tank shall be equipped with and operated with a pressure-vacuum relief valve, which shall operate within 10% of the maximum allowable working pressure of the tank, operate in accordance with the manufacturer's instructions, and be permanently labeled with the operating pressure settings. [District Rules 2201 and 4694]

10. When used for wine storage, the pressure-vacuum relief valve and storage tank shall remain in a gas-tight condition, except when the operating pressure of the tank exceeds the valve set pressure. A gas-tight condition shall be determined by measuring the gas leak in accordance with the procedures in EPA Method 21. [District Rules 2201 and 4694]

11. The temperature of the wine stored in this tank shall be maintained at or below 75 degrees Fahrenheit. For each batch of wine, the operator shall achieve the storage temperature of 75 degrees Fahrenheit or less within 60 days after completing fermentation, and shall maintain records to show when the required storage temperature of 75 degrees Fahrenheit or less was achieved. [District Rules 2201 and 4694]

12. The average fermentation temperature of each batch of must fermented in this tank shall not exceed 95 oF, calculated as the average of all temperature measurements for the batch taken at least every 12 hours over the course of the fermentation. [District Rule 2201]

13. A Three-Year Compliance Plan that demonstrates compliance with the requirements of Section 5.1 of District Rule 4694 for each year of the applicable compliance period shall be submitted to the District by no later than December 1, 2012, and every three years thereafter on or before December 1. [District Rule 4694]

14. A Three-Year Compliance Plan Verification that demonstrates that the Three-Year Compliance Plan elements are in effect shall be submitted to the District by no later than July 1, 2013, and every three years thereafter on or before July 1. [District Rule 4694]

15. An Annual Compliance Plan Demonstration that shows compliance with the applicable requirements of this rule shall be submitted to the District by no later than February 1, 2012, and every year thereafter on or before February 1. [District Rule 4694]

16. Operators using CER to mitigate fermentation emissions shall perform all monitoring and recordkeeping, as established in their approved Three-Year Compliance Plan, and shall maintain all records necessary to demonstrate compliance. [District Rule 4694]

17. Operators using District Obtained Emission Reductions (DOER) shall submit payment of DOER and administrative fees to the District no later than March 1, of the first year in the applicable compliance period. [District Rule 4694]

18. For each batch of must fermented in this tank, the operator shall record the fermentation completion date, the total gallons of must fermented, the average fermentation temperature and the uncontrolled fermentation emissions and fermentation emission reductions (calculated per the emission factors given in District Rule 4694). The information shall be recorded by the tank Permit to Operate number and by wine type, stated as either red wine or white wine. [District Rules 2201 and 4694]

19. When used for wine storage, daily throughput records, including records of filling and emptying operations, the dates of such operations, a unique identifier for each batch, the volume percent ethanol in the batch, and the volume of wine transferred, shall be maintained. [District Rules 2201 and 4694]

20. When used for wine storage, the operator shall record, on a weekly basis, the total gallons of wine contained in the tank and the maximum temperature of the stored wine. [District Rule 4694]

21. Records of total annual fermentation and total annual storage emissions, including calculation methods and parameters used, shall be maintained. [District Rule 1070 and 2201]

22. Separate annual records of total red wine and total white wine produced by fermentation at this facility, based on values reported to the Alcohol and Tobacco Tax and Trade Bureau (TTB), U.S. Department of the Treasury, shall be maintained. [District Rule 1070 and 2201]

DRAFT

CONDITIONS CONTINUE ON NEXT PAGE

23. All records shall be retained on-site for a period of at least five years and made available for District inspection upon request. [District Rules 2201 and 4694]

DRAFT

San Joaquin Valley
Air Pollution Control District

AUTHORITY TO CONSTRUCT

DRAFT

PERMIT NO: N-7855-761-0 **ISSUANCE DATE:** DRAFT

LEGAL OWNER OR OPERATOR: SUTTER HOME WINERY
MAILING ADDRESS: P O BOX 248
ST HELENA, CA 94574-0248

LOCATION: 18667 N JACOB BRACK RD
LODI, CA 95242

EQUIPMENT DESCRIPTION:
8,031 GALLON WHITE WINE FERMENTATION TANK AND WINE STORAGE TANK (TANK 2114) WITH PRESSURE/VACUUM VALVE AND INSULATION

CONDITIONS

1. {98} No air contaminant shall be released into the atmosphere which causes a public nuisance. [District Rule 4102]
2. The VOC emissions rate for fermentation operations in this tank shall not exceed 1.62 lb/day per 1000 gallons of tank capacity. [District Rule 2201]
3. The ethanol content of wine stored in this tank shall not exceed 23.9 percent by volume. [District Rule 2201]
4. When this tank is used for wine storage, the daily tank throughput, in gallons, shall not exceed five times the maximum nominal tank capacity stated on the equipment description. [District Rule 2201]
5. Total combined annual VOC emissions from all wine fermentation and wine storage operations at this facility shall not exceed 292,950 lb. [District Rule 2201]
6. Combined annual VOC emissions from all wine storage operations shall be determined as the sum of the emissions for each individual wine movement based on the volume transferred in each wine movement and the batch-specific wine storage emission factor calculated using the equation(s) specified within this permit. [District Rule 2201]
7. The annual VOC wine storage emission factor (EF) for each wine transfer shall be selected from the following emission factors based on the ethanol content of the wine transferred: For wine with ethanol content less than 14 volume percent: EF = 0.198 lb-VOC/1000 gallons; For wine with ethanol content between 14 and 21 volume percent, EF = 0.314 lb-VOC/1000 gallons; For wine with ethanol content greater than 21 volume percent, EF = 0.363 lb-VOC/1000 gallon. [District Rule 2201]

CONDITIONS CONTINUE ON NEXT PAGE

YOU MUST NOTIFY THE DISTRICT COMPLIANCE DIVISION AT (209) 557-6400 WHEN CONSTRUCTION IS COMPLETED AND PRIOR TO OPERATING THE EQUIPMENT OR MODIFICATIONS AUTHORIZED BY THIS AUTHORITY TO CONSTRUCT. This is NOT a PERMIT TO OPERATE. Approval or denial of a PERMIT TO OPERATE will be made after an inspection to verify that the equipment has been constructed in accordance with the approved plans, specifications and conditions of this Authority to Construct, and to determine if the equipment can be operated in compliance with all Rules and Regulations of the San Joaquin Valley Unified Air Pollution Control District. Unless construction has commenced pursuant to Rule 2050, this Authority to Construct shall expire and application shall be cancelled two years from the date of issuance. The applicant is responsible for complying with all laws, ordinances and regulations of all other governmental agencies which may pertain to the above equipment.

Seyed Sadredin, Executive Director / APCO

DRAFT

DAVID WARNER, Director of Permit Services
N-7855-761-0 : Mar 23 2011 1:28PM -- ROBERTSD : Joint Inspection NOT Required

8. Total annual VOC emissions from wine fermentation operations shall be determined by the following formula: Total annual VOC emissions = (Total Annual Red Wine Production-gal) x (6.2 lb-VOC/1000 gal) + (Total Annual White Wine Production-gal) x (2.5 lb-VOC/1000 gal). [District Rule 2201]

9. When used for wine storage, this tank shall be equipped with and operated with a pressure-vacuum relief valve, which shall operate within 10% of the maximum allowable working pressure of the tank, operate in accordance with the manufacturer's instructions, and be permanently labeled with the operating pressure settings. [District Rules 2201 and 4694]

10. When used for wine storage, the pressure-vacuum relief valve and storage tank shall remain in a gas-tight condition, except when the operating pressure of the tank exceeds the valve set pressure. A gas-tight condition shall be determined by measuring the gas leak in accordance with the procedures in EPA Method 21. [District Rules 2201 and 4694]

11. The temperature of the wine stored in this tank shall be maintained at or below 75 degrees Fahrenheit. For each batch of wine, the operator shall achieve the storage temperature of 75 degrees Fahrenheit or less within 60 days after completing fermentation, and shall maintain records to show when the required storage temperature of 75 degrees Fahrenheit or less was achieved. [District Rules 2201 and 4694]

12. The average fermentation temperature of each batch of must fermented in this tank shall not exceed 95 oF, calculated as the average of all temperature measurements for the batch taken at least every 12 hours over the course of the fermentation. [District Rule 2201]

13. A Three-Year Compliance Plan that demonstrates compliance with the requirements of Section 5.1 of District Rule 4694 for each year of the applicable compliance period shall be submitted to the District by no later than December 1, 2012, and every three years thereafter on or before December 1. [District Rule 4694]

14. A Three-Year Compliance Plan Verification that demonstrates that the Three-Year Compliance Plan elements are in effect shall be submitted to the District by no later than July 1, 2013, and every three years thereafter on or before July 1. [District Rule 4694]

15. An Annual Compliance Plan Demonstration that shows compliance with the applicable requirements of this rule shall be submitted to the District by no later than February 1, 2012, and every year thereafter on or before February 1. [District Rule 4694]

16. Operators using CER to mitigate fermentation emissions shall perform all monitoring and recordkeeping, as established in their approved Three-Year Compliance Plan, and shall maintain all records necessary to demonstrate compliance. [District Rule 4694]

17. Operators using District Obtained Emission Reductions (DOER) shall submit payment of DOER and administrative fees to the District no later than March 1, of the first year in the applicable compliance period. [District Rule 4694]

18. For each batch of must fermented in this tank, the operator shall record the fermentation completion date, the total gallons of must fermented, the average fermentation temperature and the uncontrolled fermentation emissions and fermentation emission reductions (calculated per the emission factors given in District Rule 4694). The information shall be recorded by the tank Permit to Operate number and by wine type, stated as either red wine or white wine. [District Rules 2201 and 4694]

19. When used for wine storage, daily throughput records, including records of filling and emptying operations, the dates of such operations, a unique identifier for each batch, the volume percent ethanol in the batch, and the volume of wine transferred, shall be maintained. [District Rules 2201 and 4694]

20. When used for wine storage, the operator shall record, on a weekly basis, the total gallons of wine contained in the tank and the maximum temperature of the stored wine. [District Rule 4694]

21. Records of total annual fermentation and total annual storage emissions, including calculation methods and parameters used, shall be maintained. [District Rule 1070 and 2201]

22. Separate annual records of total red wine and total white wine produced by fermentation at this facility, based on values reported to the Alcohol and Tobacco Tax and Trade Bureau (TTB), U.S. Department of the Treasury, shall be maintained. [District Rule 1070 and 2201]

DRAFT

CONDITIONS CONTINUE ON NEXT PAGE

23. All records shall be retained on-site for a period of at least five years and made available for District inspection upon request. [District Rules 2201 and 4694]

DRAFT

San Joaquin Valley
Air Pollution Control District

AUTHORITY TO CONSTRUCT

DRAFT

PERMIT NO: N-7855-762-0 **ISSUANCE DATE:** DRAFT

LEGAL OWNER OR OPERATOR: SUTTER HOME WINERY
MAILING ADDRESS: P O BOX 248
ST HELENA, CA 94574-0248

LOCATION: 18667 N JACOB BRACK RD
LODI, CA 95242

EQUIPMENT DESCRIPTION:
8,031 GALLON WHITE WINE FERMENTATION TANK AND WINE STORAGE TANK (TANK 2115) WITH PRESSURE/VACUUM VALVE AND INSULATION

CONDITIONS

1. {98} No air contaminant shall be released into the atmosphere which causes a public nuisance. [District Rule 4102]
2. The VOC emissions rate for fermentation operations in this tank shall not exceed 1.62 lb/day per 1000 gallons of tank capacity. [District Rule 2201]
3. The ethanol content of wine stored in this tank shall not exceed 23.9 percent by volume. [District Rule 2201]
4. When this tank is used for wine storage, the daily tank throughput, in gallons, shall not exceed five times the maximum nominal tank capacity stated on the equipment description. [District Rule 2201]
5. Total combined annual VOC emissions from all wine fermentation and wine storage operations at this facility shall not exceed 292,950 lb. [District Rule 2201]
6. Combined annual VOC emissions from all wine storage operations shall be determined as the sum of the emissions for each individual wine movement based on the volume transferred in each wine movement and the batch-specific wine storage emission factor calculated using the equation(s) specified within this permit. [District Rule 2201]
7. The annual VOC wine storage emission factor (EF) for each wine transfer shall be selected from the following emission factors based on the ethanol content of the wine transferred: For wine with ethanol content less than 14 volume percent: EF = 0.198 lb-VOC/1000 gallons; For wine with ethanol content between 14 and 21 volume percent, EF = 0.314 lb-VOC/1000 gallons; For wine with ethanol content greater than 21 volume percent, EF = 0.363 lb-VOC/1000 gallon. [District Rule 2201]

CONDITIONS CONTINUE ON NEXT PAGE

YOU MUST NOTIFY THE DISTRICT COMPLIANCE DIVISION AT (209) 557-6400 WHEN CONSTRUCTION IS COMPLETED AND PRIOR TO OPERATING THE EQUIPMENT OR MODIFICATIONS AUTHORIZED BY THIS AUTHORITY TO CONSTRUCT. This is NOT a PERMIT TO OPERATE. Approval or denial of a PERMIT TO OPERATE will be made after an inspection to verify that the equipment has been constructed in accordance with the approved plans, specifications and conditions of this Authority to Construct, and to determine if the equipment can be operated in compliance with all Rules and Regulations of the San Joaquin Valley Unified Air Pollution Control District. Unless construction has commenced pursuant to Rule 2050, this Authority to Construct shall expire and application shall be cancelled two years from the date of issuance. The applicant is responsible for complying with all laws, ordinances and regulations of all other governmental agencies which may pertain to the above equipment.

Seyed Sadredin, Executive Director / APCO

DRAFT

DAVID WARNER, Director of Permit Services
N-7855-762-0 : Mar 23 2011 1:28PM -- ROBERTSD : Joint Inspection NOT Required

8. Total annual VOC emissions from wine fermentation operations shall be determined by the following formula: Total annual VOC emissions = (Total Annual Red Wine Production-gal) x (6.2 lb-VOC/1000 gal) + (Total Annual White Wine Production-gal) x (2.5 lb-VOC/1000 gal). [District Rule 2201]

9. When used for wine storage, this tank shall be equipped with and operated with a pressure-vacuum relief valve, which shall operate within 10% of the maximum allowable working pressure of the tank, operate in accordance with the manufacturer's instructions, and be permanently labeled with the operating pressure settings. [District Rules 2201 and 4694]

10. When used for wine storage, the pressure-vacuum relief valve and storage tank shall remain in a gas-tight condition, except when the operating pressure of the tank exceeds the valve set pressure. A gas-tight condition shall be determined by measuring the gas leak in accordance with the procedures in EPA Method 21. [District Rules 2201 and 4694]

11. The temperature of the wine stored in this tank shall be maintained at or below 75 degrees Fahrenheit. For each batch of wine, the operator shall achieve the storage temperature of 75 degrees Fahrenheit or less within 60 days after completing fermentation, and shall maintain records to show when the required storage temperature of 75 degrees Fahrenheit or less was achieved. [District Rules 2201 and 4694]

12. The average fermentation temperature of each batch of must fermented in this tank shall not exceed 95 oF, calculated as the average of all temperature measurements for the batch taken at least every 12 hours over the course of the fermentation. [District Rule 2201]

13. A Three-Year Compliance Plan that demonstrates compliance with the requirements of Section 5.1 of District Rule 4694 for each year of the applicable compliance period shall be submitted to the District by no later than December 1, 2012, and every three years thereafter on or before December 1. [District Rule 4694]

14. A Three-Year Compliance Plan Verification that demonstrates that the Three-Year Compliance Plan elements are in effect shall be submitted to the District by no later than July 1, 2013, and every three years thereafter on or before July 1. [District Rule 4694]

15. An Annual Compliance Plan Demonstration that shows compliance with the applicable requirements of this rule shall be submitted to the District by no later than February 1, 2012, and every year thereafter on or before February 1. [District Rule 4694]

16. Operators using CER to mitigate fermentation emissions shall perform all monitoring and recordkeeping, as established in their approved Three-Year Compliance Plan, and shall maintain all records necessary to demonstrate compliance. [District Rule 4694]

17. Operators using District Obtained Emission Reductions (DOER) shall submit payment of DOER and administrative fees to the District no later than March 1, of the first year in the applicable compliance period. [District Rule 4694]

18. For each batch of must fermented in this tank, the operator shall record the fermentation completion date, the total gallons of must fermented, the average fermentation temperature and the uncontrolled fermentation emissions and fermentation emission reductions (calculated per the emission factors given in District Rule 4694). The information shall be recorded by the tank Permit to Operate number and by wine type, stated as either red wine or white wine. [District Rules 2201 and 4694]

19. When used for wine storage, daily throughput records, including records of filling and emptying operations, the dates of such operations, a unique identifier for each batch, the volume percent ethanol in the batch, and the volume of wine transferred, shall be maintained. [District Rules 2201 and 4694]

20. When used for wine storage, the operator shall record, on a weekly basis, the total gallons of wine contained in the tank and the maximum temperature of the stored wine. [District Rule 4694]

21. Records of total annual fermentation and total annual storage emissions, including calculation methods and parameters used, shall be maintained. [District Rule 1070 and 2201]

22. Separate annual records of total red wine and total white wine produced by fermentation at this facility, based on values reported to the Alcohol and Tobacco Tax and Trade Bureau (TTB), U.S. Department of the Treasury, shall be maintained. [District Rule 1070 and 2201]

DRAFT

CONDITIONS CONTINUE ON NEXT PAGE

23. All records shall be retained on-site for a period of at least five years and made available for District inspection upon request. [District Rules 2201 and 4694]

DRAFT

San Joaquin Valley
Air Pollution Control District

AUTHORITY TO CONSTRUCT

DRAFT

PERMIT NO: N-7855-763-0

ISSUANCE DATE: DRAFT

LEGAL OWNER OR OPERATOR: SUTTER HOME WINERY
MAILING ADDRESS: P O BOX 248
ST HELENA, CA 94574-0248

LOCATION: 18667 N JACOB BRACK RD
LODI, CA 95242

EQUIPMENT DESCRIPTION:
8,031 GALLON WHITE WINE FERMENTATION TANK AND WINE STORAGE TANK (TANK 2116) WITH PRESSURE/VACUUM VALVE AND INSULATION

CONDITIONS

1. {98} No air contaminant shall be released into the atmosphere which causes a public nuisance. [District Rule 4102]
2. The VOC emissions rate for fermentation operations in this tank shall not exceed 1.62 lb/day per 1000 gallons of tank capacity. [District Rule 2201]
3. The ethanol content of wine stored in this tank shall not exceed 23.9 percent by volume. [District Rule 2201]
4. When this tank is used for wine storage, the daily tank throughput, in gallons, shall not exceed five times the maximum nominal tank capacity stated on the equipment description. [District Rule 2201]
5. Total combined annual VOC emissions from all wine fermentation and wine storage operations at this facility shall not exceed 292,950 lb. [District Rule 2201]
6. Combined annual VOC emissions from all wine storage operations shall be determined as the sum of the emissions for each individual wine movement based on the volume transferred in each wine movement and the batch-specific wine storage emission factor calculated using the equation(s) specified within this permit. [District Rule 2201]
7. The annual VOC wine storage emission factor (EF) for each wine transfer shall be selected from the following emission factors based on the ethanol content of the wine transferred: For wine with ethanol content less than 14 volume percent: EF = 0.198 lb-VOC/1000 gallons; For wine with ethanol content between 14 and 21 volume percent, EF = 0.314 lb-VOC/1000 gallons; For wine with ethanol content greater than 21 volume percent, EF = 0.363 lb-VOC/1000 gallon. [District Rule 2201]

CONDITIONS CONTINUE ON NEXT PAGE

YOU MUST NOTIFY THE DISTRICT COMPLIANCE DIVISION AT (209) 557-6400 WHEN CONSTRUCTION IS COMPLETED AND PRIOR TO OPERATING THE EQUIPMENT OR MODIFICATIONS AUTHORIZED BY THIS AUTHORITY TO CONSTRUCT. This is NOT a PERMIT TO OPERATE. Approval or denial of a PERMIT TO OPERATE will be made after an inspection to verify that the equipment has been constructed in accordance with the approved plans, specifications and conditions of this Authority to Construct, and to determine if the equipment can be operated in compliance with all Rules and Regulations of the San Joaquin Valley Unified Air Pollution Control District. Unless construction has commenced pursuant to Rule 2050, this Authority to Construct shall expire and application shall be cancelled two years from the date of issuance. The applicant is responsible for complying with all laws, ordinances and regulations of all other governmental agencies which may pertain to the above equipment.

Seyed Sadredin, Executive Director / APCO

DRAFT

DAVID WARNER, Director of Permit Services
N-7855-763-0 : Mar 23 2011 1:28PM – ROBERTSD : Joint Inspection NOT Required

8. Total annual VOC emissions from wine fermentation operations shall be determined by the following formula: Total annual VOC emissions = (Total Annual Red Wine Production-gal) x (6.2 lb-VOC/1000 gal) + (Total Annual White Wine Production-gal) x (2.5 lb-VOC/1000 gal). [District Rule 2201]

9. When used for wine storage, this tank shall be equipped with and operated with a pressure-vacuum relief valve, which shall operate within 10% of the maximum allowable working pressure of the tank, operate in accordance with the manufacturer's instructions, and be permanently labeled with the operating pressure settings. [District Rules 2201 and 4694]

10. When used for wine storage, the pressure-vacuum relief valve and storage tank shall remain in a gas-tight condition, except when the operating pressure of the tank exceeds the valve set pressure. A gas-tight condition shall be determined by measuring the gas leak in accordance with the procedures in EPA Method 21. [District Rules 2201 and 4694]

11. The temperature of the wine stored in this tank shall be maintained at or below 75 degrees Fahrenheit. For each batch of wine, the operator shall achieve the storage temperature of 75 degrees Fahrenheit or less within 60 days after completing fermentation, and shall maintain records to show when the required storage temperature of 75 degrees Fahrenheit or less was achieved. [District Rules 2201 and 4694]

12. The average fermentation temperature of each batch of must fermented in this tank shall not exceed 95 oF, calculated as the average of all temperature measurements for the batch taken at least every 12 hours over the course of the fermentation. [District Rule 2201]

13. A Three-Year Compliance Plan that demonstrates compliance with the requirements of Section 5.1 of District Rule 4694 for each year of the applicable compliance period shall be submitted to the District by no later than December 1, 2012, and every three years thereafter on or before December 1. [District Rule 4694]

14. A Three-Year Compliance Plan Verification that demonstrates that the Three-Year Compliance Plan elements are in effect shall be submitted to the District by no later than July 1, 2013, and every three years thereafter on or before July 1. [District Rule 4694]

15. An Annual Compliance Plan Demonstration that shows compliance with the applicable requirements of this rule shall be submitted to the District by no later than February 1, 2012, and every year thereafter on or before February 1. [District Rule 4694]

16. Operators using CER to mitigate fermentation emissions shall perform all monitoring and recordkeeping, as established in their approved Three-Year Compliance Plan, and shall maintain all records necessary to demonstrate compliance. [District Rule 4694]

17. Operators using District Obtained Emission Reductions (DOER) shall submit payment of DOER and administrative fees to the District no later than March 1, of the first year in the applicable compliance period. [District Rule 4694]

18. For each batch of must fermented in this tank, the operator shall record the fermentation completion date, the total gallons of must fermented, the average fermentation temperature and the uncontrolled fermentation emissions and fermentation emission reductions (calculated per the emission factors given in District Rule 4694). The information shall be recorded by the tank Permit to Operate number and by wine type, stated as either red wine or white wine. [District Rules 2201 and 4694]

19. When used for wine storage, daily throughput records, including records of filling and emptying operations, the dates of such operations, a unique identifier for each batch, the volume percent ethanol in the batch, and the volume of wine transferred, shall be maintained. [District Rules 2201 and 4694]

20. When used for wine storage, the operator shall record, on a weekly basis, the total gallons of wine contained in the tank and the maximum temperature of the stored wine. [District Rule 4694]

21. Records of total annual fermentation and total annual storage emissions, including calculation methods and parameters used, shall be maintained. [District Rule 1070 and 2201]

22. Separate annual records of total red wine and total white wine produced by fermentation at this facility, based on values reported to the Alcohol and Tobacco Tax and Trade Bureau (TTB), U.S. Department of the Treasury, shall be maintained. [District Rule 1070 and 2201]

DRAFT

CONDITIONS CONTINUE ON NEXT PAGE

23. All records shall be retained on-site for a period of at least five years and made available for District inspection upon request. [District Rules 2201 and 4694]

DRAFT

San Joaquin Valley
Air Pollution Control District

AUTHORITY TO CONSTRUCT

DRAFT

PERMIT NO: N-7855-764-0 **ISSUANCE DATE:** DRAFT

LEGAL OWNER OR OPERATOR: SUTTER HOME WINERY
MAILING ADDRESS: P O BOX 248
ST HELENA, CA 94574-0248

LOCATION: 18667 N JACOB BRACK RD
LODI, CA 95242

EQUIPMENT DESCRIPTION:
8,031 GALLON WHITE WINE FERMENTATION TANK AND WINE STORAGE TANK (TANK 2117) WITH PRESSURE/VACUUM VALVE AND INSULATION

CONDITIONS

1. {98} No air contaminant shall be released into the atmosphere which causes a public nuisance. [District Rule 4102]
2. The VOC emissions rate for fermentation operations in this tank shall not exceed 1.62 lb/day per 1000 gallons of tank capacity. [District Rule 2201]
3. The ethanol content of wine stored in this tank shall not exceed 23.9 percent by volume. [District Rule 2201]
4. When this tank is used for wine storage, the daily tank throughput, in gallons, shall not exceed five times the maximum nominal tank capacity stated on the equipment description. [District Rule 2201]
5. Total combined annual VOC emissions from all wine fermentation and wine storage operations at this facility shall not exceed 292,950 lb. [District Rule 2201]
6. Combined annual VOC emissions from all wine storage operations shall be determined as the sum of the emissions for each individual wine movement based on the volume transferred in each wine movement and the batch-specific wine storage emission factor calculated using the equation(s) specified within this permit. [District Rule 2201]
7. The annual VOC wine storage emission factor (EF) for each wine transfer shall be selected from the following emission factors based on the ethanol content of the wine transferred: For wine with ethanol content less than 14 volume percent: EF = 0.198 lb-VOC/1000 gallons; For wine with ethanol content between 14 and 21 volume percent, EF = 0.314 lb-VOC/1000 gallons; For wine with ethanol content greater than 21 volume percent, EF = 0.363 lb-VOC/1000 gallon. [District Rule 2201]

CONDITIONS CONTINUE ON NEXT PAGE

YOU MUST NOTIFY THE DISTRICT COMPLIANCE DIVISION AT (209) 557-6400 WHEN CONSTRUCTION IS COMPLETED AND PRIOR TO OPERATING THE EQUIPMENT OR MODIFICATIONS AUTHORIZED BY THIS AUTHORITY TO CONSTRUCT. This is NOT a PERMIT TO OPERATE. Approval or denial of a PERMIT TO OPERATE will be made after an inspection to verify that the equipment has been constructed in accordance with the approved plans, specifications and conditions of this Authority to Construct, and to determine if the equipment can be operated in compliance with all Rules and Regulations of the San Joaquin Valley Unified Air Pollution Control District. Unless construction has commenced pursuant to Rule 2050, this Authority to Construct shall expire and application shall be cancelled two years from the date of issuance. The applicant is responsible for complying with all laws, ordinances and regulations of all other governmental agencies which may pertain to the above equipment.

Seyed Sadredin, Executive Director / APCO

DRAFT

DAVID WARNER, Director of Permit Services
N-7855-764-0 : Mar 23 2011 1:28PM -- ROBERTSD : Joint Inspection NOT Required

8. Total annual VOC emissions from wine fermentation operations shall be determined by the following formula: Total annual VOC emissions = (Total Annual Red Wine Production-gal) x (6.2 lb-VOC/1000 gal) + (Total Annual White Wine Production-gal) x (2.5 lb-VOC/1000 gal). [District Rule 2201]
9. When used for wine storage, this tank shall be equipped with and operated with a pressure-vacuum relief valve, which shall operate within 10% of the maximum allowable working pressure of the tank, operate in accordance with the manufacturer's instructions, and be permanently labeled with the operating pressure settings. [District Rules 2201 and 4694]
10. When used for wine storage, the pressure-vacuum relief valve and storage tank shall remain in a gas-tight condition, except when the operating pressure of the tank exceeds the valve set pressure. A gas-tight condition shall be determined by measuring the gas leak in accordance with the procedures in EPA Method 21. [District Rules 2201 and 4694]
11. The temperature of the wine stored in this tank shall be maintained at or below 75 degrees Fahrenheit. For each batch of wine, the operator shall achieve the storage temperature of 75 degrees Fahrenheit or less within 60 days after completing fermentation, and shall maintain records to show when the required storage temperature of 75 degrees Fahrenheit or less was achieved. [District Rules 2201 and 4694]
12. The average fermentation temperature of each batch of must fermented in this tank shall not exceed 95 oF, calculated as the average of all temperature measurements for the batch taken at least every 12 hours over the course of the fermentation. [District Rule 2201]
13. A Three-Year Compliance Plan that demonstrates compliance with the requirements of Section 5.1 of District Rule 4694 for each year of the applicable compliance period shall be submitted to the District by no later than December 1, 2012, and every three years thereafter on or before December 1. [District Rule 4694]
14. A Three-Year Compliance Plan Verification that demonstrates that the Three-Year Compliance Plan elements are in effect shall be submitted to the District by no later than July 1, 2013, and every three years thereafter on or before July 1. [District Rule 4694]
15. An Annual Compliance Plan Demonstration that shows compliance with the applicable requirements of this rule shall be submitted to the District by no later than February 1, 2012, and every year thereafter on or before February 1. [District Rule 4694]
16. Operators using CER to mitigate fermentation emissions shall perform all monitoring and recordkeeping, as established in their approved Three-Year Compliance Plan, and shall maintain all records necessary to demonstrate compliance. [District Rule 4694]
17. Operators using District Obtained Emission Reductions (DOER) shall submit payment of DOER and administrative fees to the District no later than March 1, of the first year in the applicable compliance period. [District Rule 4694]
18. For each batch of must fermented in this tank, the operator shall record the fermentation completion date, the total gallons of must fermented, the average fermentation temperature and the uncontrolled fermentation emissions and fermentation emission reductions (calculated per the emission factors given in District Rule 4694). The information shall be recorded by the tank Permit to Operate number and by wine type, stated as either red wine or white wine. [District Rules 2201 and 4694]
19. When used for wine storage, daily throughput records, including records of filling and emptying operations, the dates of such operations, a unique identifier for each batch, the volume percent ethanol in the batch, and the volume of wine transferred, shall be maintained. [District Rules 2201 and 4694]
20. When used for wine storage, the operator shall record, on a weekly basis, the total gallons of wine contained in the tank and the maximum temperature of the stored wine. [District Rule 4694]
21. Records of total annual fermentation and total annual storage emissions, including calculation methods and parameters used, shall be maintained. [District Rule 1070 and 2201]
22. Separate annual records of total red wine and total white wine produced by fermentation at this facility, based on values reported to the Alcohol and Tobacco Tax and Trade Bureau (TTB), U.S. Department of the Treasury, shall be maintained. [District Rule 1070 and 2201]

DRAFT

CONDITIONS CONTINUE ON NEXT PAGE

23. All records shall be retained on-site for a period of at least five years and made available for District inspection upon request. [District Rules 2201 and 4694]

DRAFT

San Joaquin Valley
Air Pollution Control District

AUTHORITY TO CONSTRUCT

DRAFT

PERMIT NO: N-7855-765-0

ISSUANCE DATE: DRAFT

LEGAL OWNER OR OPERATOR: SUTTER HOME WINERY
MAILING ADDRESS: P O BOX 248
ST HELENA, CA 94574-0248

LOCATION: 18667 N JACOB BRACK RD
LODI, CA 95242

EQUIPMENT DESCRIPTION:
8,031 GALLON WHITE WINE FERMENTATION TANK AND WINE STORAGE TANK (TANK 2118) WITH PRESSURE/VACUUM VALVE AND INSULATION

CONDITIONS

1. {98} No air contaminant shall be released into the atmosphere which causes a public nuisance. [District Rule 4102]
2. The VOC emissions rate for fermentation operations in this tank shall not exceed 1.62 lb/day per 1000 gallons of tank capacity. [District Rule 2201]
3. The ethanol content of wine stored in this tank shall not exceed 23.9 percent by volume. [District Rule 2201]
4. When this tank is used for wine storage, the daily tank throughput, in gallons, shall not exceed five times the maximum nominal tank capacity stated on the equipment description. [District Rule 2201]
5. Total combined annual VOC emissions from all wine fermentation and wine storage operations at this facility shall not exceed 292,950 lb. [District Rule 2201]
6. Combined annual VOC emissions from all wine storage operations shall be determined as the sum of the emissions for each individual wine movement based on the volume transferred in each wine movement and the batch-specific wine storage emission factor calculated using the equation(s) specified within this permit. [District Rule 2201]
7. The annual VOC wine storage emission factor (EF) for each wine transfer shall be selected from the following emission factors based on the ethanol content of the wine transferred: For wine with ethanol content less than 14 volume percent: EF = 0.198 lb-VOC/1000 gallons; For wine with ethanol content between 14 and 21 volume percent, EF = 0.314 lb-VOC/1000 gallons; For wine with ethanol content greater than 21 volume percent, EF = 0.363 lb-VOC/1000 gallon. [District Rule 2201]

CONDITIONS CONTINUE ON NEXT PAGE

YOU MUST NOTIFY THE DISTRICT COMPLIANCE DIVISION AT (209) 557-6400 WHEN CONSTRUCTION IS COMPLETED AND PRIOR TO OPERATING THE EQUIPMENT OR MODIFICATIONS AUTHORIZED BY THIS AUTHORITY TO CONSTRUCT. This is NOT a PERMIT TO OPERATE. Approval or denial of a PERMIT TO OPERATE will be made after an inspection to verify that the equipment has been constructed in accordance with the approved plans, specifications and conditions of this Authority to Construct, and to determine if the equipment can be operated in compliance with all Rules and Regulations of the San Joaquin Valley Unified Air Pollution Control District. Unless construction has commenced pursuant to Rule 2050, this Authority to Construct shall expire and application shall be cancelled two years from the date of issuance. The applicant is responsible for complying with all laws, ordinances and regulations of all other governmental agencies which may pertain to the above equipment.

Seyed Sadredin, Executive Director / APCO

DRAFT

DAVID WARNER, Director of Permit Services
N-7855-765-0 : Mar 23 2011 1:28PM -- ROBERTSD : Joint Inspection NOT Required

8. Total annual VOC emissions from wine fermentation operations shall be determined by the following formula: Total annual VOC emissions = (Total Annual Red Wine Production-gal) x (6.2 lb-VOC/1000 gal) + (Total Annual White Wine Production-gal) x (2.5 lb-VOC/1000 gal). [District Rule 2201]
9. When used for wine storage, this tank shall be equipped with and operated with a pressure-vacuum relief valve, which shall operate within 10% of the maximum allowable working pressure of the tank, operate in accordance with the manufacturer's instructions, and be permanently labeled with the operating pressure settings. [District Rules 2201 and 4694]
10. When used for wine storage, the pressure-vacuum relief valve and storage tank shall remain in a gas-tight condition, except when the operating pressure of the tank exceeds the valve set pressure. A gas-tight condition shall be determined by measuring the gas leak in accordance with the procedures in EPA Method 21. [District Rules 2201 and 4694]
11. The temperature of the wine stored in this tank shall be maintained at or below 75 degrees Fahrenheit. For each batch of wine, the operator shall achieve the storage temperature of 75 degrees Fahrenheit or less within 60 days after completing fermentation, and shall maintain records to show when the required storage temperature of 75 degrees Fahrenheit or less was achieved. [District Rules 2201 and 4694]
12. The average fermentation temperature of each batch of must fermented in this tank shall not exceed 95 oF, calculated as the average of all temperature measurements for the batch taken at least every 12 hours over the course of the fermentation. [District Rule 2201]
13. A Three-Year Compliance Plan that demonstrates compliance with the requirements of Section 5.1 of District Rule 4694 for each year of the applicable compliance period shall be submitted to the District by no later than December 1, 2012, and every three years thereafter on or before December 1. [District Rule 4694]
14. A Three-Year Compliance Plan Verification that demonstrates that the Three-Year Compliance Plan elements are in effect shall be submitted to the District by no later than July 1, 2013, and every three years thereafter on or before July 1. [District Rule 4694]
15. An Annual Compliance Plan Demonstration that shows compliance with the applicable requirements of this rule shall be submitted to the District by no later than February 1, 2012, and every year thereafter on or before February 1. [District Rule 4694]
16. Operators using CER to mitigate fermentation emissions shall perform all monitoring and recordkeeping, as established in their approved Three-Year Compliance Plan, and shall maintain all records necessary to demonstrate compliance. [District Rule 4694]
17. Operators using District Obtained Emission Reductions (DOER) shall submit payment of DOER and administrative fees to the District no later than March 1, of the first year in the applicable compliance period. [District Rule 4694]
18. For each batch of must fermented in this tank, the operator shall record the fermentation completion date, the total gallons of must fermented, the average fermentation temperature and the uncontrolled fermentation emissions and fermentation emission reductions (calculated per the emission factors given in District Rule 4694). The information shall be recorded by the tank Permit to Operate number and by wine type, stated as either red wine or white wine. [District Rules 2201 and 4694]
19. When used for wine storage, daily throughput records, including records of filling and emptying operations, the dates of such operations, a unique identifier for each batch, the volume percent ethanol in the batch, and the volume of wine transferred, shall be maintained. [District Rules 2201 and 4694]
20. When used for wine storage, the operator shall record, on a weekly basis, the total gallons of wine contained in the tank and the maximum temperature of the stored wine. [District Rule 4694]
21. Records of total annual fermentation and total annual storage emissions, including calculation methods and parameters used, shall be maintained. [District Rule 1070 and 2201]
22. Separate annual records of total red wine and total white wine produced by fermentation at this facility, based on values reported to the Alcohol and Tobacco Tax and Trade Bureau (TTB), U.S. Department of the Treasury, shall be maintained. [District Rule 1070 and 2201]

DRAFT

CONDITIONS CONTINUE ON NEXT PAGE

23. All records shall be retained on-site for a period of at least five years and made available for District inspection upon request. [District Rules 2201 and 4694]

DRAFT

San Joaquin Valley
Air Pollution Control District

AUTHORITY TO CONSTRUCT

DRAFT

PERMIT NO: N-7855-766-0 **ISSUANCE DATE:** DRAFT

LEGAL OWNER OR OPERATOR: SUTTER HOME WINERY
MAILING ADDRESS: P O BOX 248
ST HELENA, CA 94574-0248

LOCATION: 18667 N JACOB BRACK RD
LODI, CA 95242

EQUIPMENT DESCRIPTION:
8,031 GALLON WHITE WINE FERMENTATION TANK AND WINE STORAGE TANK (TANK 2119) WITH PRESSURE/VACUUM VALVE AND INSULATION

CONDITIONS

1. {98} No air contaminant shall be released into the atmosphere which causes a public nuisance. [District Rule 4102]
2. The VOC emissions rate for fermentation operations in this tank shall not exceed 1.62 lb/day per 1000 gallons of tank capacity. [District Rule 2201]
3. The ethanol content of wine stored in this tank shall not exceed 23.9 percent by volume. [District Rule 2201]
4. When this tank is used for wine storage, the daily tank throughput, in gallons, shall not exceed five times the maximum nominal tank capacity stated on the equipment description. [District Rule 2201]
5. Total combined annual VOC emissions from all wine fermentation and wine storage operations at this facility shall not exceed 292,950 lb. [District Rule 2201]
6. Combined annual VOC emissions from all wine storage operations shall be determined as the sum of the emissions for each individual wine movement based on the volume transferred in each wine movement and the batch-specific wine storage emission factor calculated using the equation(s) specified within this permit. [District Rule 2201]
7. The annual VOC wine storage emission factor (EF) for each wine transfer shall be selected from the following emission factors based on the ethanol content of the wine transferred: For wine with ethanol content less than 14 volume percent: EF = 0.198 lb-VOC/1000 gallons; For wine with ethanol content between 14 and 21 volume percent, EF = 0.314 lb-VOC/1000 gallons; For wine with ethanol content greater than 21 volume percent, EF = 0.363 lb-VOC/1000 gallon. [District Rule 2201]

CONDITIONS CONTINUE ON NEXT PAGE

YOU MUST NOTIFY THE DISTRICT COMPLIANCE DIVISION AT (209) 557-6400 WHEN CONSTRUCTION IS COMPLETED AND PRIOR TO OPERATING THE EQUIPMENT OR MODIFICATIONS AUTHORIZED BY THIS AUTHORITY TO CONSTRUCT. This is NOT a PERMIT TO OPERATE. Approval or denial of a PERMIT TO OPERATE will be made after an inspection to verify that the equipment has been constructed in accordance with the approved plans, specifications and conditions of this Authority to Construct, and to determine if the equipment can be operated in compliance with all Rules and Regulations of the San Joaquin Valley Unified Air Pollution Control District. Unless construction has commenced pursuant to Rule 2050, this Authority to Construct shall expire and application shall be cancelled two years from the date of issuance. The applicant is responsible for complying with all laws, ordinances and regulations of all other governmental agencies which may pertain to the above equipment.

Seyed Sadredin, Executive Director / APCO

DRAFT

DAVID WARNER, Director of Permit Services
N-7855-766-0 : Mar 23 2011 1:28PM – ROBERTSD : Joint Inspection NOT Required

8. Total annual VOC emissions from wine fermentation operations shall be determined by the following formula: Total annual VOC emissions = (Total Annual Red Wine Production-gal) x (6.2 lb-VOC/1000 gal) + (Total Annual White Wine Production-gal) x (2.5 lb-VOC/1000 gal). [District Rule 2201]

9. When used for wine storage, this tank shall be equipped with and operated with a pressure-vacuum relief valve, which shall operate within 10% of the maximum allowable working pressure of the tank, operate in accordance with the manufacturer's instructions, and be permanently labeled with the operating pressure settings. [District Rules 2201 and 4694]

10. When used for wine storage, the pressure-vacuum relief valve and storage tank shall remain in a gas-tight condition, except when the operating pressure of the tank exceeds the valve set pressure. A gas-tight condition shall be determined by measuring the gas leak in accordance with the procedures in EPA Method 21. [District Rules 2201 and 4694]

11. The temperature of the wine stored in this tank shall be maintained at or below 75 degrees Fahrenheit. For each batch of wine, the operator shall achieve the storage temperature of 75 degrees Fahrenheit or less within 60 days after completing fermentation, and shall maintain records to show when the required storage temperature of 75 degrees Fahrenheit or less was achieved. [District Rules 2201 and 4694]

12. The average fermentation temperature of each batch of must fermented in this tank shall not exceed 95 oF, calculated as the average of all temperature measurements for the batch taken at least every 12 hours over the course of the fermentation. [District Rule 2201]

13. A Three-Year Compliance Plan that demonstrates compliance with the requirements of Section 5.1 of District Rule 4694 for each year of the applicable compliance period shall be submitted to the District by no later than December 1, 2012, and every three years thereafter on or before December 1. [District Rule 4694]

14. A Three-Year Compliance Plan Verification that demonstrates that the Three-Year Compliance Plan elements are in effect shall be submitted to the District by no later than July 1, 2013, and every three years thereafter on or before July 1. [District Rule 4694]

15. An Annual Compliance Plan Demonstration that shows compliance with the applicable requirements of this rule shall be submitted to the District by no later than February 1, 2012, and every year thereafter on or before February 1. [District Rule 4694]

16. Operators using CER to mitigate fermentation emissions shall perform all monitoring and recordkeeping, as established in their approved Three-Year Compliance Plan, and shall maintain all records necessary to demonstrate compliance. [District Rule 4694]

17. Operators using District Obtained Emission Reductions (DOER) shall submit payment of DOER and administrative fees to the District no later than March 1, of the first year in the applicable compliance period. [District Rule 4694]

18. For each batch of must fermented in this tank, the operator shall record the fermentation completion date, the total gallons of must fermented, the average fermentation temperature and the uncontrolled fermentation emissions and fermentation emission reductions (calculated per the emission factors given in District Rule 4694). The information shall be recorded by the tank Permit to Operate number and by wine type, stated as either red wine or white wine. [District Rules 2201 and 4694]

19. When used for wine storage, daily throughput records, including records of filling and emptying operations, the dates of such operations, a unique identifier for each batch, the volume percent ethanol in the batch, and the volume of wine transferred, shall be maintained. [District Rules 2201 and 4694]

20. When used for wine storage, the operator shall record, on a weekly basis, the total gallons of wine contained in the tank and the maximum temperature of the stored wine. [District Rule 4694]

21. Records of total annual fermentation and total annual storage emissions, including calculation methods and parameters used, shall be maintained. [District Rule 1070 and 2201]

22. Separate annual records of total red wine and total white wine produced by fermentation at this facility, based on values reported to the Alcohol and Tobacco Tax and Trade Bureau (TTB), U.S. Department of the Treasury, shall be maintained. [District Rule 1070 and 2201]

DRAFT

CONDITIONS CONTINUE ON NEXT PAGE

23. All records shall be retained on-site for a period of at least five years and made available for District inspection upon request. [District Rules 2201 and 4694]

DRAFT

San Joaquin Valley
Air Pollution Control District

AUTHORITY TO CONSTRUCT

DRAFT

PERMIT NO: N-7855-767-0 **ISSUANCE DATE:** DRAFT

LEGAL OWNER OR OPERATOR: SUTTER HOME WINERY
MAILING ADDRESS: P O BOX 248
ST HELENA, CA 94574-0248

LOCATION: 18667 N JACOB BRACK RD
LODI, CA 95242

EQUIPMENT DESCRIPTION:
13,487 GALLON WHITE WINE FERMENTATION TANK AND WINE STORAGE TANK (TANK 2120) WITH PRESSURE/VACUUM VALVE AND INSULATION

CONDITIONS

1. {98} No air contaminant shall be released into the atmosphere which causes a public nuisance. [District Rule 4102]
2. The VOC emissions rate for fermentation operations in this tank shall not exceed 1.62 lb/day per 1000 gallons of tank capacity. [District Rule 2201]
3. The ethanol content of wine stored in this tank shall not exceed 23.9 percent by volume. [District Rule 2201]
4. When this tank is used for wine storage, the daily tank throughput, in gallons, shall not exceed five times the maximum nominal tank capacity stated on the equipment description. [District Rule 2201]
5. Total combined annual VOC emissions from all wine fermentation and wine storage operations at this facility shall not exceed 292,950 lb. [District Rule 2201]
6. Combined annual VOC emissions from all wine storage operations shall be determined as the sum of the emissions for each individual wine movement based on the volume transferred in each wine movement and the batch-specific wine storage emission factor calculated using the equation(s) specified within this permit. [District Rule 2201]
7. The annual VOC wine storage emission factor (EF) for each wine transfer shall be selected from the following emission factors based on the ethanol content of the wine transferred: For wine with ethanol content less than 14 volume percent: EF = 0.198 lb-VOC/1000 gallons; For wine with ethanol content between 14 and 21 volume percent, EF = 0.314 lb-VOC/1000 gallons; For wine with ethanol content greater than 21 volume percent, EF = 0.363 lb-VOC/1000 gallon. [District Rule 2201]

CONDITIONS CONTINUE ON NEXT PAGE

YOU MUST NOTIFY THE DISTRICT COMPLIANCE DIVISION AT (209) 557-6400 WHEN CONSTRUCTION IS COMPLETED AND PRIOR TO OPERATING THE EQUIPMENT OR MODIFICATIONS AUTHORIZED BY THIS AUTHORITY TO CONSTRUCT. This is NOT a PERMIT TO OPERATE. Approval or denial of a PERMIT TO OPERATE will be made after an inspection to verify that the equipment has been constructed in accordance with the approved plans, specifications and conditions of this Authority to Construct, and to determine if the equipment can be operated in compliance with all Rules and Regulations of the San Joaquin Valley Unified Air Pollution Control District. Unless construction has commenced pursuant to Rule 2050, this Authority to Construct shall expire and application shall be cancelled two years from the date of issuance. The applicant is responsible for complying with all laws, ordinances and regulations of all other governmental agencies which may pertain to the above equipment.

Seyed Sadredin, Executive Director / APCO

DRAFT

DAVID WARNER, Director of Permit Services
N-7855-767-0 : Mar 23 2011 1:28PM -- ROBERTSD : Joint Inspection NOT Required

8. Total annual VOC emissions from wine fermentation operations shall be determined by the following formula: Total annual VOC emissions = (Total Annual Red Wine Production-gal) x (6.2 lb-VOC/1000 gal) + (Total Annual White Wine Production-gal) x (2.5 lb-VOC/1000 gal). [District Rule 2201]
9. When used for wine storage, this tank shall be equipped with and operated with a pressure-vacuum relief valve, which shall operate within 10% of the maximum allowable working pressure of the tank, operate in accordance with the manufacturer's instructions, and be permanently labeled with the operating pressure settings. [District Rules 2201 and 4694]
10. When used for wine storage, the pressure-vacuum relief valve and storage tank shall remain in a gas-tight condition, except when the operating pressure of the tank exceeds the valve set pressure. A gas-tight condition shall be determined by measuring the gas leak in accordance with the procedures in EPA Method 21. [District Rules 2201 and 4694]
11. The temperature of the wine stored in this tank shall be maintained at or below 75 degrees Fahrenheit. For each batch of wine, the operator shall achieve the storage temperature of 75 degrees Fahrenheit or less within 60 days after completing fermentation, and shall maintain records to show when the required storage temperature of 75 degrees Fahrenheit or less was achieved. [District Rules 2201 and 4694]
12. The average fermentation temperature of each batch of must fermented in this tank shall not exceed 95 oF, calculated as the average of all temperature measurements for the batch taken at least every 12 hours over the course of the fermentation. [District Rule 2201]
13. A Three-Year Compliance Plan that demonstrates compliance with the requirements of Section 5.1 of District Rule 4694 for each year of the applicable compliance period shall be submitted to the District by no later than December 1, 2012, and every three years thereafter on or before December 1. [District Rule 4694]
14. A Three-Year Compliance Plan Verification that demonstrates that the Three-Year Compliance Plan elements are in effect shall be submitted to the District by no later than July 1, 2013, and every three years thereafter on or before July 1. [District Rule 4694]
15. An Annual Compliance Plan Demonstration that shows compliance with the applicable requirements of this rule shall be submitted to the District by no later than February 1, 2012, and every year thereafter on or before February 1. [District Rule 4694]
16. Operators using CER to mitigate fermentation emissions shall perform all monitoring and recordkeeping, as established in their approved Three-Year Compliance Plan, and shall maintain all records necessary to demonstrate compliance. [District Rule 4694]
17. Operators using District Obtained Emission Reductions (DOER) shall submit payment of DOER and administrative fees to the District no later than March 1, of the first year in the applicable compliance period. [District Rule 4694]
18. For each batch of must fermented in this tank, the operator shall record the fermentation completion date, the total gallons of must fermented, the average fermentation temperature and the uncontrolled fermentation emissions and fermentation emission reductions (calculated per the emission factors given in District Rule 4694). The information shall be recorded by the tank Permit to Operate number and by wine type, stated as either red wine or white wine. [District Rules 2201 and 4694]
19. When used for wine storage, daily throughput records, including records of filling and emptying operations, the dates of such operations, a unique identifier for each batch, the volume percent ethanol in the batch, and the volume of wine transferred, shall be maintained. [District Rules 2201 and 4694]
20. When used for wine storage, the operator shall record, on a weekly basis, the total gallons of wine contained in the tank and the maximum temperature of the stored wine. [District Rule 4694]
21. Records of total annual fermentation and total annual storage emissions, including calculation methods and parameters used, shall be maintained. [District Rule 1070 and 2201]
22. Separate annual records of total red wine and total white wine produced by fermentation at this facility, based on values reported to the Alcohol and Tobacco Tax and Trade Bureau (TTB), U.S. Department of the Treasury, shall be maintained. [District Rule 1070 and 2201]

DRAFT

CONDITIONS CONTINUE ON NEXT PAGE

23. All records shall be retained on-site for a period of at least five years and made available for District inspection upon request. [District Rules 2201 and 4694]

DRAFT

San Joaquin Valley
Air Pollution Control District

AUTHORITY TO CONSTRUCT

DRAFT

PERMIT NO: N-7855-768-0 **ISSUANCE DATE:** DRAFT

LEGAL OWNER OR OPERATOR: SUTTER HOME WINERY
MAILING ADDRESS: P O BOX 248
ST HELENA, CA 94574-0248

LOCATION: 18667 N JACOB BRACK RD
LODI, CA 95242

EQUIPMENT DESCRIPTION:
13,487 GALLON WHITE WINE FERMENTATION TANK AND WINE STORAGE TANK (TANK 2121) WITH PRESSURE/VACUUM VALVE AND INSULATION

CONDITIONS

1. {98} No air contaminant shall be released into the atmosphere which causes a public nuisance. [District Rule 4102]
2. The VOC emissions rate for fermentation operations in this tank shall not exceed 1.62 lb/day per 1000 gallons of tank capacity. [District Rule 2201]
3. The ethanol content of wine stored in this tank shall not exceed 23.9 percent by volume. [District Rule 2201]
4. When this tank is used for wine storage, the daily tank throughput, in gallons, shall not exceed five times the maximum nominal tank capacity stated on the equipment description. [District Rule 2201]
5. Total combined annual VOC emissions from all wine fermentation and wine storage operations at this facility shall not exceed 292,950 lb. [District Rule 2201]
6. Combined annual VOC emissions from all wine storage operations shall be determined as the sum of the emissions for each individual wine movement based on the volume transferred in each wine movement and the batch-specific wine storage emission factor calculated using the equation(s) specified within this permit. [District Rule 2201]
7. The annual VOC wine storage emission factor (EF) for each wine transfer shall be selected from the following emission factors based on the ethanol content of the wine transferred: For wine with ethanol content less than 14 volume percent: EF = 0.198 lb-VOC/1000 gallons; For wine with ethanol content between 14 and 21 volume percent, EF = 0.314 lb-VOC/1000 gallons; For wine with ethanol content greater than 21 volume percent, EF = 0.363 lb-VOC/1000 gallon. [District Rule 2201]

CONDITIONS CONTINUE ON NEXT PAGE

YOU MUST NOTIFY THE DISTRICT COMPLIANCE DIVISION AT (209) 557-6400 WHEN CONSTRUCTION IS COMPLETED AND PRIOR TO OPERATING THE EQUIPMENT OR MODIFICATIONS AUTHORIZED BY THIS AUTHORITY TO CONSTRUCT. This is NOT a PERMIT TO OPERATE. Approval or denial of a PERMIT TO OPERATE will be made after an inspection to verify that the equipment has been constructed in accordance with the approved plans, specifications and conditions of this Authority to Construct, and to determine if the equipment can be operated in compliance with all Rules and Regulations of the San Joaquin Valley Unified Air Pollution Control District. Unless construction has commenced pursuant to Rule 2050, this Authority to Construct shall expire and application shall be cancelled two years from the date of issuance. The applicant is responsible for complying with all laws, ordinances and regulations of all other governmental agencies which may pertain to the above equipment.

Seyed Sadredin, Executive Director / APCO

DRAFT

DAVID WARNER, Director of Permit Services
N-7855-768-0: Mar 23 2011 1:29PM -- ROBERTSD : Joint Inspection NOT Required

8. Total annual VOC emissions from wine fermentation operations shall be determined by the following formula: Total annual VOC emissions = (Total Annual Red Wine Production-gal) x (6.2 lb-VOC/1000 gal) + (Total Annual White Wine Production-gal) x (2.5 lb-VOC/1000 gal). [District Rule 2201]
9. When used for wine storage, this tank shall be equipped with and operated with a pressure-vacuum relief valve, which shall operate within 10% of the maximum allowable working pressure of the tank, operate in accordance with the manufacturer's instructions, and be permanently labeled with the operating pressure settings. [District Rules 2201 and 4694]
10. When used for wine storage, the pressure-vacuum relief valve and storage tank shall remain in a gas-tight condition, except when the operating pressure of the tank exceeds the valve set pressure. A gas-tight condition shall be determined by measuring the gas leak in accordance with the procedures in EPA Method 21. [District Rules 2201 and 4694]
11. The temperature of the wine stored in this tank shall be maintained at or below 75 degrees Fahrenheit. For each batch of wine, the operator shall achieve the storage temperature of 75 degrees Fahrenheit or less within 60 days after completing fermentation, and shall maintain records to show when the required storage temperature of 75 degrees Fahrenheit or less was achieved. [District Rules 2201 and 4694]
12. The average fermentation temperature of each batch of must fermented in this tank shall not exceed 95 oF, calculated as the average of all temperature measurements for the batch taken at least every 12 hours over the course of the fermentation. [District Rule 2201]
13. A Three-Year Compliance Plan that demonstrates compliance with the requirements of Section 5.1 of District Rule 4694 for each year of the applicable compliance period shall be submitted to the District by no later than December 1, 2012, and every three years thereafter on or before December 1. [District Rule 4694]
14. A Three-Year Compliance Plan Verification that demonstrates that the Three-Year Compliance Plan elements are in effect shall be submitted to the District by no later than July 1, 2013, and every three years thereafter on or before July 1. [District Rule 4694]
15. An Annual Compliance Plan Demonstration that shows compliance with the applicable requirements of this rule shall be submitted to the District by no later than February 1, 2012, and every year thereafter on or before February 1. [District Rule 4694]
16. Operators using CER to mitigate fermentation emissions shall perform all monitoring and recordkeeping, as established in their approved Three-Year Compliance Plan, and shall maintain all records necessary to demonstrate compliance. [District Rule 4694]
17. Operators using District Obtained Emission Reductions (DOER) shall submit payment of DOER and administrative fees to the District no later than March 1, of the first year in the applicable compliance period. [District Rule 4694]
18. For each batch of must fermented in this tank, the operator shall record the fermentation completion date, the total gallons of must fermented, the average fermentation temperature and the uncontrolled fermentation emissions and fermentation emission reductions (calculated per the emission factors given in District Rule 4694). The information shall be recorded by the tank Permit to Operate number and by wine type, stated as either red wine or white wine. [District Rules 2201 and 4694]
19. When used for wine storage, daily throughput records, including records of filling and emptying operations, the dates of such operations, a unique identifier for each batch, the volume percent ethanol in the batch, and the volume of wine transferred, shall be maintained. [District Rules 2201 and 4694]
20. When used for wine storage, the operator shall record, on a weekly basis, the total gallons of wine contained in the tank and the maximum temperature of the stored wine. [District Rule 4694]
21. Records of total annual fermentation and total annual storage emissions, including calculation methods and parameters used, shall be maintained. [District Rule 1070 and 2201]
22. Separate annual records of total red wine and total white wine produced by fermentation at this facility, based on values reported to the Alcohol and Tobacco Tax and Trade Bureau (TTB), U.S. Department of the Treasury, shall be maintained. [District Rule 1070 and 2201]

DRAFT

CONDITIONS CONTINUE ON NEXT PAGE

23. All records shall be retained on-site for a period of at least five years and made available for District inspection upon request. [District Rules 2201 and 4694]

DRAFT

San Joaquin Valley
Air Pollution Control District

AUTHORITY TO CONSTRUCT

DRAFT

PERMIT NO: N-7855-769-0 **ISSUANCE DATE:** DRAFT

LEGAL OWNER OR OPERATOR: SUTTER HOME WINERY
MAILING ADDRESS: P O BOX 248
ST HELENA, CA 94574-0248

LOCATION: 18667 N JACOB BRACK RD
LODI, CA 95242

EQUIPMENT DESCRIPTION:
13,487 GALLON WHITE WINE FERMENTATION TANK AND WINE STORAGE TANK (TANK 2122) WITH PRESSURE/VACUUM VALVE AND INSULATION

CONDITIONS

1. {98} No air contaminant shall be released into the atmosphere which causes a public nuisance. [District Rule 4102]
2. The VOC emissions rate for fermentation operations in this tank shall not exceed 1.62 lb/day per 1000 gallons of tank capacity. [District Rule 2201]
3. The ethanol content of wine stored in this tank shall not exceed 23.9 percent by volume. [District Rule 2201]
4. When this tank is used for wine storage, the daily tank throughput, in gallons, shall not exceed five times the maximum nominal tank capacity stated on the equipment description. [District Rule 2201]
5. Total combined annual VOC emissions from all wine fermentation and wine storage operations at this facility shall not exceed 292,950 lb. [District Rule 2201]
6. Combined annual VOC emissions from all wine storage operations shall be determined as the sum of the emissions for each individual wine movement based on the volume transferred in each wine movement and the batch-specific wine storage emission factor calculated using the equation(s) specified within this permit. [District Rule 2201]
7. The annual VOC wine storage emission factor (EF) for each wine transfer shall be selected from the following emission factors based on the ethanol content of the wine transferred: For wine with ethanol content less than 14 volume percent: EF = 0.198 lb-VOC/1000 gallons; For wine with ethanol content between 14 and 21 volume percent, EF = 0.314 lb-VOC/1000 gallons; For wine with ethanol content greater than 21 volume percent, EF = 0.363 lb-VOC/1000 gallon. [District Rule 2201]

CONDITIONS CONTINUE ON NEXT PAGE

YOU MUST NOTIFY THE DISTRICT COMPLIANCE DIVISION AT (209) 557-6400 WHEN CONSTRUCTION IS COMPLETED AND PRIOR TO OPERATING THE EQUIPMENT OR MODIFICATIONS AUTHORIZED BY THIS AUTHORITY TO CONSTRUCT. This is NOT a PERMIT TO OPERATE. Approval or denial of a PERMIT TO OPERATE will be made after an inspection to verify that the equipment has been constructed in accordance with the approved plans, specifications and conditions of this Authority to Construct, and to determine if the equipment can be operated in compliance with all Rules and Regulations of the San Joaquin Valley Unified Air Pollution Control District. Unless construction has commenced pursuant to Rule 2050, this Authority to Construct shall expire and application shall be cancelled two years from the date of issuance. The applicant is responsible for complying with all laws, ordinances and regulations of all other governmental agencies which may pertain to the above equipment.

Seyed Sadredin, Executive Director / APCO

DRAFT

DAVID WARNER, Director of Permit Services
N-7855-769-0 : Mar 23 2011 1:29PM – ROBERTSD : Joint Inspection NOT Required

8. Total annual VOC emissions from wine fermentation operations shall be determined by the following formula: Total annual VOC emissions = (Total Annual Red Wine Production-gal) x (6.2 lb-VOC/1000 gal) + (Total Annual White Wine Production-gal) x (2.5 lb-VOC/1000 gal). [District Rule 2201]

9. When used for wine storage, this tank shall be equipped with and operated with a pressure-vacuum relief valve, which shall operate within 10% of the maximum allowable working pressure of the tank, operate in accordance with the manufacturer's instructions, and be permanently labeled with the operating pressure settings. [District Rules 2201 and 4694]

10. When used for wine storage, the pressure-vacuum relief valve and storage tank shall remain in a gas-tight condition, except when the operating pressure of the tank exceeds the valve set pressure. A gas-tight condition shall be determined by measuring the gas leak in accordance with the procedures in EPA Method 21. [District Rules 2201 and 4694]

11. The temperature of the wine stored in this tank shall be maintained at or below 75 degrees Fahrenheit. For each batch of wine, the operator shall achieve the storage temperature of 75 degrees Fahrenheit or less within 60 days after completing fermentation, and shall maintain records to show when the required storage temperature of 75 degrees Fahrenheit or less was achieved. [District Rules 2201 and 4694]

12. The average fermentation temperature of each batch of must fermented in this tank shall not exceed 95 oF, calculated as the average of all temperature measurements for the batch taken at least every 12 hours over the course of the fermentation. [District Rule 2201]

13. A Three-Year Compliance Plan that demonstrates compliance with the requirements of Section 5.1 of District Rule 4694 for each year of the applicable compliance period shall be submitted to the District by no later than December 1, 2012, and every three years thereafter on or before December 1. [District Rule 4694]

14. A Three-Year Compliance Plan Verification that demonstrates that the Three-Year Compliance Plan elements are in effect shall be submitted to the District by no later than July 1, 2013, and every three years thereafter on or before July 1. [District Rule 4694]

15. An Annual Compliance Plan Demonstration that shows compliance with the applicable requirements of this rule shall be submitted to the District by no later than February 1, 2012, and every year thereafter on or before February 1. [District Rule 4694]

16. Operators using CER to mitigate fermentation emissions shall perform all monitoring and recordkeeping, as established in their approved Three-Year Compliance Plan, and shall maintain all records necessary to demonstrate compliance. [District Rule 4694]

17. Operators using District Obtained Emission Reductions (DOER) shall submit payment of DOER and administrative fees to the District no later than March 1, of the first year in the applicable compliance period. [District Rule 4694]

18. For each batch of must fermented in this tank, the operator shall record the fermentation completion date, the total gallons of must fermented, the average fermentation temperature and the uncontrolled fermentation emissions and fermentation emission reductions (calculated per the emission factors given in District Rule 4694). The information shall be recorded by the tank Permit to Operate number and by wine type, stated as either red wine or white wine. [District Rules 2201 and 4694]

19. When used for wine storage, daily throughput records, including records of filling and emptying operations, the dates of such operations, a unique identifier for each batch, the volume percent ethanol in the batch, and the volume of wine transferred, shall be maintained. [District Rules 2201 and 4694]

20. When used for wine storage, the operator shall record, on a weekly basis, the total gallons of wine contained in the tank and the maximum temperature of the stored wine. [District Rule 4694]

21. Records of total annual fermentation and total annual storage emissions, including calculation methods and parameters used, shall be maintained. [District Rule 1070 and 2201]

22. Separate annual records of total red wine and total white wine produced by fermentation at this facility, based on values reported to the Alcohol and Tobacco Tax and Trade Bureau (TTB), U.S. Department of the Treasury, shall be maintained. [District Rule 1070 and 2201]

DRAFT

CONDITIONS CONTINUE ON NEXT PAGE

23. All records shall be retained on-site for a period of at least five years and made available for District inspection upon request. [District Rules 2201 and 4694]

DRAFT

San Joaquin Valley
Air Pollution Control District

AUTHORITY TO CONSTRUCT

DRAFT

PERMIT NO: N-7855-770-0 **ISSUANCE DATE:** DRAFT

LEGAL OWNER OR OPERATOR: SUTTER HOME WINERY
MAILING ADDRESS: P O BOX 248
ST HELENA, CA 94574-0248

LOCATION: 18667 N JACOB BRACK RD
LODI, CA 95242

EQUIPMENT DESCRIPTION:
13,487 GALLON WHITE WINE FERMENTATION TANK AND WINE STORAGE TANK (TANK 2123) WITH PRESSURE/VACUUM VALVE AND INSULATION

CONDITIONS

1. {98} No air contaminant shall be released into the atmosphere which causes a public nuisance. [District Rule 4102]
2. The VOC emissions rate for fermentation operations in this tank shall not exceed 1.62 lb/day per 1000 gallons of tank capacity. [District Rule 2201]
3. The ethanol content of wine stored in this tank shall not exceed 23.9 percent by volume. [District Rule 2201]
4. When this tank is used for wine storage, the daily tank throughput, in gallons, shall not exceed five times the maximum nominal tank capacity stated on the equipment description. [District Rule 2201]
5. Total combined annual VOC emissions from all wine fermentation and wine storage operations at this facility shall not exceed 292,950 lb. [District Rule 2201]
6. Combined annual VOC emissions from all wine storage operations shall be determined as the sum of the emissions for each individual wine movement based on the volume transferred in each wine movement and the batch-specific wine storage emission factor calculated using the equation(s) specified within this permit. [District Rule 2201]
7. The annual VOC wine storage emission factor (EF) for each wine transfer shall be selected from the following emission factors based on the ethanol content of the wine transferred: For wine with ethanol content less than 14 volume percent: EF = 0.198 lb-VOC/1000 gallons; For wine with ethanol content between 14 and 21 volume percent, EF = 0.314 lb-VOC/1000 gallons; For wine with ethanol content greater than 21 volume percent, EF = 0.363 lb-VOC/1000 gallon. [District Rule 2201]

CONDITIONS CONTINUE ON NEXT PAGE

YOU MUST NOTIFY THE DISTRICT COMPLIANCE DIVISION AT (209) 557-6400 WHEN CONSTRUCTION IS COMPLETED AND PRIOR TO OPERATING THE EQUIPMENT OR MODIFICATIONS AUTHORIZED BY THIS AUTHORITY TO CONSTRUCT. This is NOT a PERMIT TO OPERATE. Approval or denial of a PERMIT TO OPERATE will be made after an inspection to verify that the equipment has been constructed in accordance with the approved plans, specifications and conditions of this Authority to Construct, and to determine if the equipment can be operated in compliance with all Rules and Regulations of the San Joaquin Valley Unified Air Pollution Control District. Unless construction has commenced pursuant to Rule 2050, this Authority to Construct shall expire and application shall be cancelled two years from the date of issuance. The applicant is responsible for complying with all laws, ordinances and regulations of all other governmental agencies which may pertain to the above equipment.

Seyed Sadredin, Executive Director / APCO

DRAFT

DAVID WARNER, Director of Permit Services
N-7855-770-0 : Mar 23 2011 1:29PM – ROBERTSD : Joint Inspection NOT Required

8. Total annual VOC emissions from wine fermentation operations shall be determined by the following formula: Total annual VOC emissions = (Total Annual Red Wine Production-gal) x (6.2 lb-VOC/1000 gal) + (Total Annual White Wine Production-gal) x (2.5 lb-VOC/1000 gal). [District Rule 2201]

9. When used for wine storage, this tank shall be equipped with and operated with a pressure-vacuum relief valve, which shall operate within 10% of the maximum allowable working pressure of the tank, operate in accordance with the manufacturer's instructions, and be permanently labeled with the operating pressure settings. [District Rules 2201 and 4694]

10. When used for wine storage, the pressure-vacuum relief valve and storage tank shall remain in a gas-tight condition, except when the operating pressure of the tank exceeds the valve set pressure. A gas-tight condition shall be determined by measuring the gas leak in accordance with the procedures in EPA Method 21. [District Rules 2201 and 4694]

11. The temperature of the wine stored in this tank shall be maintained at or below 75 degrees Fahrenheit. For each batch of wine, the operator shall achieve the storage temperature of 75 degrees Fahrenheit or less within 60 days after completing fermentation, and shall maintain records to show when the required storage temperature of 75 degrees Fahrenheit or less was achieved. [District Rules 2201 and 4694]

12. The average fermentation temperature of each batch of must fermented in this tank shall not exceed 95 oF, calculated as the average of all temperature measurements for the batch taken at least every 12 hours over the course of the fermentation. [District Rule 2201]

13. A Three-Year Compliance Plan that demonstrates compliance with the requirements of Section 5.1 of District Rule 4694 for each year of the applicable compliance period shall be submitted to the District by no later than December 1, 2012, and every three years thereafter on or before December 1. [District Rule 4694]

14. A Three-Year Compliance Plan Verification that demonstrates that the Three-Year Compliance Plan elements are in effect shall be submitted to the District by no later than July 1, 2013, and every three years thereafter on or before July 1. [District Rule 4694]

15. An Annual Compliance Plan Demonstration that shows compliance with the applicable requirements of this rule shall be submitted to the District by no later than February 1, 2012, and every year thereafter on or before February 1. [District Rule 4694]

16. Operators using CER to mitigate fermentation emissions shall perform all monitoring and recordkeeping, as established in their approved Three-Year Compliance Plan, and shall maintain all records necessary to demonstrate compliance. [District Rule 4694]

17. Operators using District Obtained Emission Reductions (DOER) shall submit payment of DOER and administrative fees to the District no later than March 1, of the first year in the applicable compliance period. [District Rule 4694]

18. For each batch of must fermented in this tank, the operator shall record the fermentation completion date, the total gallons of must fermented, the average fermentation temperature and the uncontrolled fermentation emissions and fermentation emission reductions (calculated per the emission factors given in District Rule 4694). The information shall be recorded by the tank Permit to Operate number and by wine type, stated as either red wine or white wine. [District Rules 2201 and 4694]

19. When used for wine storage, daily throughput records, including records of filling and emptying operations, the dates of such operations, a unique identifier for each batch, the volume percent ethanol in the batch, and the volume of wine transferred, shall be maintained. [District Rules 2201 and 4694]

20. When used for wine storage, the operator shall record, on a weekly basis, the total gallons of wine contained in the tank and the maximum temperature of the stored wine. [District Rule 4694]

21. Records of total annual fermentation and total annual storage emissions, including calculation methods and parameters used, shall be maintained. [District Rule 1070 and 2201]

22. Separate annual records of total red wine and total white wine produced by fermentation at this facility, based on values reported to the Alcohol and Tobacco Tax and Trade Bureau (TTB), U.S. Department of the Treasury, shall be maintained. [District Rule 1070 and 2201]

DRAFT

CONDITIONS CONTINUE ON NEXT PAGE

23. All records shall be retained on-site for a period of at least five years and made available for District inspection upon request. [District Rules 2201 and 4694]

DRAFT

San Joaquin Valley
Air Pollution Control District

AUTHORITY TO CONSTRUCT

DRAFT

PERMIT NO: N-7855-771-0

ISSUANCE DATE: DRAFT

LEGAL OWNER OR OPERATOR: SUTTER HOME WINERY
MAILING ADDRESS: P O BOX 248
ST HELENA, CA 94574-0248

LOCATION: 18667 N JACOB BRACK RD
LODI, CA 95242

EQUIPMENT DESCRIPTION:
13,487 GALLON WHITE WINE FERMENTATION TANK AND WINE STORAGE TANK (TANK 2124) WITH PRESSURE/VACUUM VALVE AND INSULATION

CONDITIONS

1. {98} No air contaminant shall be released into the atmosphere which causes a public nuisance. [District Rule 4102]
2. The VOC emissions rate for fermentation operations in this tank shall not exceed 1.62 lb/day per 1000 gallons of tank capacity. [District Rule 2201]
3. The ethanol content of wine stored in this tank shall not exceed 23.9 percent by volume. [District Rule 2201]
4. When this tank is used for wine storage, the daily tank throughput, in gallons, shall not exceed five times the maximum nominal tank capacity stated on the equipment description. [District Rule 2201]
5. Total combined annual VOC emissions from all wine fermentation and wine storage operations at this facility shall not exceed 292,950 lb. [District Rule 2201]
6. Combined annual VOC emissions from all wine storage operations shall be determined as the sum of the emissions for each individual wine movement based on the volume transferred in each wine movement and the batch-specific wine storage emission factor calculated using the equation(s) specified within this permit. [District Rule 2201]
7. The annual VOC wine storage emission factor (EF) for each wine transfer shall be selected from the following emission factors based on the ethanol content of the wine transferred: For wine with ethanol content less than 14 volume percent: EF = 0.198 lb-VOC/1000 gallons; For wine with ethanol content between 14 and 21 volume percent, EF = 0.314 lb-VOC/1000 gallons; For wine with ethanol content greater than 21 volume percent, EF = 0.363 lb-VOC/1000 gallon. [District Rule 2201]

CONDITIONS CONTINUE ON NEXT PAGE

YOU MUST NOTIFY THE DISTRICT COMPLIANCE DIVISION AT (209) 557-6400 WHEN CONSTRUCTION IS COMPLETED AND PRIOR TO OPERATING THE EQUIPMENT OR MODIFICATIONS AUTHORIZED BY THIS AUTHORITY TO CONSTRUCT. This is NOT a PERMIT TO OPERATE. Approval or denial of a PERMIT TO OPERATE will be made after an inspection to verify that the equipment has been constructed in accordance with the approved plans, specifications and conditions of this Authority to Construct, and to determine if the equipment can be operated in compliance with all Rules and Regulations of the San Joaquin Valley Unified Air Pollution Control District. Unless construction has commenced pursuant to Rule 2050, this Authority to Construct shall expire and application shall be cancelled two years from the date of issuance. The applicant is responsible for complying with all laws, ordinances and regulations of all other governmental agencies which may pertain to the above equipment.

Seyed Sadredin, Executive Director / APCO

DRAFT

DAVID WARNER, Director of Permit Services
N-7855-771-0 : Mar 23 2011 1:29PM -- ROBERTSD : Joint Inspection NOT Required

8. Total annual VOC emissions from wine fermentation operations shall be determined by the following formula: Total annual VOC emissions = (Total Annual Red Wine Production-gal) x (6.2 lb-VOC/1000 gal) + (Total Annual White Wine Production-gal) x (2.5 lb-VOC/1000 gal). [District Rule 2201]

9. When used for wine storage, this tank shall be equipped with and operated with a pressure-vacuum relief valve, which shall operate within 10% of the maximum allowable working pressure of the tank, operate in accordance with the manufacturer's instructions, and be permanently labeled with the operating pressure settings. [District Rules 2201 and 4694]

10. When used for wine storage, the pressure-vacuum relief valve and storage tank shall remain in a gas-tight condition, except when the operating pressure of the tank exceeds the valve set pressure. A gas-tight condition shall be determined by measuring the gas leak in accordance with the procedures in EPA Method 21. [District Rules 2201 and 4694]

11. The temperature of the wine stored in this tank shall be maintained at or below 75 degrees Fahrenheit. For each batch of wine, the operator shall achieve the storage temperature of 75 degrees Fahrenheit or less within 60 days after completing fermentation, and shall maintain records to show when the required storage temperature of 75 degrees Fahrenheit or less was achieved. [District Rules 2201 and 4694]

12. The average fermentation temperature of each batch of must fermented in this tank shall not exceed 95 oF, calculated as the average of all temperature measurements for the batch taken at least every 12 hours over the course of the fermentation. [District Rule 2201]

13. A Three-Year Compliance Plan that demonstrates compliance with the requirements of Section 5.1 of District Rule 4694 for each year of the applicable compliance period shall be submitted to the District by no later than December 1, 2012, and every three years thereafter on or before December 1. [District Rule 4694]

14. A Three-Year Compliance Plan Verification that demonstrates that the Three-Year Compliance Plan elements are in effect shall be submitted to the District by no later than July 1, 2013, and every three years thereafter on or before July 1. [District Rule 4694]

15. An Annual Compliance Plan Demonstration that shows compliance with the applicable requirements of this rule shall be submitted to the District by no later than February 1, 2012, and every year thereafter on or before February 1. [District Rule 4694]

16. Operators using CER to mitigate fermentation emissions shall perform all monitoring and recordkeeping, as established in their approved Three-Year Compliance Plan, and shall maintain all records necessary to demonstrate compliance. [District Rule 4694]

17. Operators using District Obtained Emission Reductions (DOER) shall submit payment of DOER and administrative fees to the District no later than March 1, of the first year in the applicable compliance period. [District Rule 4694]

18. For each batch of must fermented in this tank, the operator shall record the fermentation completion date, the total gallons of must fermented, the average fermentation temperature and the uncontrolled fermentation emissions and fermentation emission reductions (calculated per the emission factors given in District Rule 4694). The information shall be recorded by the tank Permit to Operate number and by wine type, stated as either red wine or white wine. [District Rules 2201 and 4694]

19. When used for wine storage, daily throughput records, including records of filling and emptying operations, the dates of such operations, a unique identifier for each batch, the volume percent ethanol in the batch, and the volume of wine transferred, shall be maintained. [District Rules 2201 and 4694]

20. When used for wine storage, the operator shall record, on a weekly basis, the total gallons of wine contained in the tank and the maximum temperature of the stored wine. [District Rule 4694]

21. Records of total annual fermentation and total annual storage emissions, including calculation methods and parameters used, shall be maintained. [District Rule 1070 and 2201]

22. Separate annual records of total red wine and total white wine produced by fermentation at this facility, based on values reported to the Alcohol and Tobacco Tax and Trade Bureau (TTB), U.S. Department of the Treasury, shall be maintained. [District Rule 1070 and 2201]

DRAFT

CONDITIONS CONTINUE ON NEXT PAGE

23. All records shall be retained on-site for a period of at least five years and made available for District inspection upon request. [District Rules 2201 and 4694]

DRAFT

San Joaquin Valley
Air Pollution Control District

AUTHORITY TO CONSTRUCT

DRAFT

PERMIT NO: N-7855-772-0 **ISSUANCE DATE:** DRAFT

LEGAL OWNER OR OPERATOR: SUTTER HOME WINERY
MAILING ADDRESS: P O BOX 248
ST HELENA, CA 94574-0248

LOCATION: 18667 N JACOB BRACK RD
LODI, CA 95242

EQUIPMENT DESCRIPTION:
20,219 GALLON WHITE WINE FERMENTATION TANK AND WINE STORAGE TANK (TANK 2125) WITH PRESSURE/VACUUM VALVE AND INSULATION

CONDITIONS

1. {98} No air contaminant shall be released into the atmosphere which causes a public nuisance. [District Rule 4102]
2. The VOC emissions rate for fermentation operations in this tank shall not exceed 1.62 lb/day per 1000 gallons of tank capacity. [District Rule 2201]
3. The ethanol content of wine stored in this tank shall not exceed 23.9 percent by volume. [District Rule 2201]
4. When this tank is used for wine storage, the daily tank throughput, in gallons, shall not exceed five times the maximum nominal tank capacity stated on the equipment description. [District Rule 2201]
5. Total combined annual VOC emissions from all wine fermentation and wine storage operations at this facility shall not exceed 292,950 lb. [District Rule 2201]
6. Combined annual VOC emissions from all wine storage operations shall be determined as the sum of the emissions for each individual wine movement based on the volume transferred in each wine movement and the batch-specific wine storage emission factor calculated using the equation(s) specified within this permit. [District Rule 2201]
7. The annual VOC wine storage emission factor (EF) for each wine transfer shall be selected from the following emission factors based on the ethanol content of the wine transferred: For wine with ethanol content less than 14 volume percent: EF = 0.198 lb-VOC/1000 gallons; For wine with ethanol content between 14 and 21 volume percent, EF = 0.314 lb-VOC/1000 gallons; For wine with ethanol content greater than 21 volume percent, EF = 0.363 lb-VOC/1000 gallon. [District Rule 2201]

CONDITIONS CONTINUE ON NEXT PAGE

YOU MUST NOTIFY THE DISTRICT COMPLIANCE DIVISION AT (209) 557-6400 WHEN CONSTRUCTION IS COMPLETED AND PRIOR TO OPERATING THE EQUIPMENT OR MODIFICATIONS AUTHORIZED BY THIS AUTHORITY TO CONSTRUCT. This is NOT a PERMIT TO OPERATE. Approval or denial of a PERMIT TO OPERATE will be made after an inspection to verify that the equipment has been constructed in accordance with the approved plans, specifications and conditions of this Authority to Construct, and to determine if the equipment can be operated in compliance with all Rules and Regulations of the San Joaquin Valley Unified Air Pollution Control District. Unless construction has commenced pursuant to Rule 2050, this Authority to Construct shall expire and application shall be cancelled two years from the date of issuance. The applicant is responsible for complying with all laws, ordinances and regulations of all other governmental agencies which may pertain to the above equipment.

Seyed Sadredin, Executive Director / APCO

DRAFT

DAVID WARNER, Director of Permit Services
N-7855-772-0 : Mar 23 2011 1:29PM – ROBERTSD : Joint Inspection NOT Required

8. Total annual VOC emissions from wine fermentation operations shall be determined by the following formula: Total annual VOC emissions = (Total Annual Red Wine Production-gal) x (6.2 lb-VOC/1000 gal) + (Total Annual White Wine Production-gal) x (2.5 lb-VOC/1000 gal). [District Rule 2201]

9. When used for wine storage, this tank shall be equipped with and operated with a pressure-vacuum relief valve, which shall operate within 10% of the maximum allowable working pressure of the tank, operate in accordance with the manufacturer's instructions, and be permanently labeled with the operating pressure settings. [District Rules 2201 and 4694]

10. When used for wine storage, the pressure-vacuum relief valve and storage tank shall remain in a gas-tight condition, except when the operating pressure of the tank exceeds the valve set pressure. A gas-tight condition shall be determined by measuring the gas leak in accordance with the procedures in EPA Method 21. [District Rules 2201 and 4694]

11. The temperature of the wine stored in this tank shall be maintained at or below 75 degrees Fahrenheit. For each batch of wine, the operator shall achieve the storage temperature of 75 degrees Fahrenheit or less within 60 days after completing fermentation, and shall maintain records to show when the required storage temperature of 75 degrees Fahrenheit or less was achieved. [District Rules 2201 and 4694]

12. The average fermentation temperature of each batch of must fermented in this tank shall not exceed 95 oF, calculated as the average of all temperature measurements for the batch taken at least every 12 hours over the course of the fermentation. [District Rule 2201]

13. A Three-Year Compliance Plan that demonstrates compliance with the requirements of Section 5.1 of District Rule 4694 for each year of the applicable compliance period shall be submitted to the District by no later than December 1, 2012, and every three years thereafter on or before December 1. [District Rule 4694]

14. A Three-Year Compliance Plan Verification that demonstrates that the Three-Year Compliance Plan elements are in effect shall be submitted to the District by no later than July 1, 2013, and every three years thereafter on or before July 1. [District Rule 4694]

15. An Annual Compliance Plan Demonstration that shows compliance with the applicable requirements of this rule shall be submitted to the District by no later than February 1, 2012, and every year thereafter on or before February 1. [District Rule 4694]

16. Operators using CER to mitigate fermentation emissions shall perform all monitoring and recordkeeping, as established in their approved Three-Year Compliance Plan, and shall maintain all records necessary to demonstrate compliance. [District Rule 4694]

17. Operators using District Obtained Emission Reductions (DOER) shall submit payment of DOER and administrative fees to the District no later than March 1, of the first year in the applicable compliance period. [District Rule 4694]

18. For each batch of must fermented in this tank, the operator shall record the fermentation completion date, the total gallons of must fermented, the average fermentation temperature and the uncontrolled fermentation emissions and fermentation emission reductions (calculated per the emission factors given in District Rule 4694). The information shall be recorded by the tank Permit to Operate number and by wine type, stated as either red wine or white wine. [District Rules 2201 and 4694]

19. When used for wine storage, daily throughput records, including records of filling and emptying operations, the dates of such operations, a unique identifier for each batch, the volume percent ethanol in the batch, and the volume of wine transferred, shall be maintained. [District Rules 2201 and 4694]

20. When used for wine storage, the operator shall record, on a weekly basis, the total gallons of wine contained in the tank and the maximum temperature of the stored wine. [District Rule 4694]

21. Records of total annual fermentation and total annual storage emissions, including calculation methods and parameters used, shall be maintained. [District Rule 1070 and 2201]

22. Separate annual records of total red wine and total white wine produced by fermentation at this facility, based on values reported to the Alcohol and Tobacco Tax and Trade Bureau (TTB), U.S. Department of the Treasury, shall be maintained. [District Rule 1070 and 2201]

DRAFT

CONDITIONS CONTINUE ON NEXT PAGE

23. All records shall be retained on-site for a period of at least five years and made available for District inspection upon request. [District Rules 2201 and 4694]

DRAFT

San Joaquin Valley
Air Pollution Control District

AUTHORITY TO CONSTRUCT

DRAFT

PERMIT NO: N-7855-773-0 **ISSUANCE DATE:** DRAFT

LEGAL OWNER OR OPERATOR: SUTTER HOME WINERY
MAILING ADDRESS: P O BOX 248
ST HELENA, CA 94574-0248

LOCATION: 18667 N JACOB BRACK RD
LODI, CA 95242

EQUIPMENT DESCRIPTION:
20,219 GALLON WHITE WINE FERMENTATION TANK AND WINE STORAGE TANK (TANK 2126) WITH PRESSURE/VACUUM VALVE AND INSULATION

CONDITIONS

1. {98} No air contaminant shall be released into the atmosphere which causes a public nuisance. [District Rule 4102]
2. The VOC emissions rate for fermentation operations in this tank shall not exceed 1.62 lb/day per 1000 gallons of tank capacity. [District Rule 2201]
3. The ethanol content of wine stored in this tank shall not exceed 23.9 percent by volume. [District Rule 2201]
4. When this tank is used for wine storage, the daily tank throughput, in gallons, shall not exceed five times the maximum nominal tank capacity stated on the equipment description. [District Rule 2201]
5. Total combined annual VOC emissions from all wine fermentation and wine storage operations at this facility shall not exceed 292,950 lb. [District Rule 2201]
6. Combined annual VOC emissions from all wine storage operations shall be determined as the sum of the emissions for each individual wine movement based on the volume transferred in each wine movement and the batch-specific wine storage emission factor calculated using the equation(s) specified within this permit. [District Rule 2201]
7. The annual VOC wine storage emission factor (EF) for each wine transfer shall be selected from the following emission factors based on the ethanol content of the wine transferred: For wine with ethanol content less than 14 volume percent: EF = 0.198 lb-VOC/1000 gallons; For wine with ethanol content between 14 and 21 volume percent, EF = 0.314 lb-VOC/1000 gallons; For wine with ethanol content greater than 21 volume percent, EF = 0.363 lb-VOC/1000 gallon. [District Rule 2201]

CONDITIONS CONTINUE ON NEXT PAGE

YOU MUST NOTIFY THE DISTRICT COMPLIANCE DIVISION AT (209) 557-6400 WHEN CONSTRUCTION IS COMPLETED AND PRIOR TO OPERATING THE EQUIPMENT OR MODIFICATIONS AUTHORIZED BY THIS AUTHORITY TO CONSTRUCT. This is NOT a PERMIT TO OPERATE. Approval or denial of a PERMIT TO OPERATE will be made after an inspection to verify that the equipment has been constructed in accordance with the approved plans, specifications and conditions of this Authority to Construct, and to determine if the equipment can be operated in compliance with all Rules and Regulations of the San Joaquin Valley Unified Air Pollution Control District. Unless construction has commenced pursuant to Rule 2050, this Authority to Construct shall expire and application shall be cancelled two years from the date of issuance. The applicant is responsible for complying with all laws, ordinances and regulations of all other governmental agencies which may pertain to the above equipment.

Seyed Sadredin, Executive Director / APCO

DRAFT

DAVID WARNER, Director of Permit Services
N-7855-773-0 : Mar 23 2011 1:29PM -- ROBERTSD : Joint Inspection NOT Required

8. Total annual VOC emissions from wine fermentation operations shall be determined by the following formula: Total annual VOC emissions = (Total Annual Red Wine Production-gal) x (6.2 lb-VOC/1000 gal) + (Total Annual White Wine Production-gal) x (2.5 lb-VOC/1000 gal). [District Rule 2201]

9. When used for wine storage, this tank shall be equipped with and operated with a pressure-vacuum relief valve, which shall operate within 10% of the maximum allowable working pressure of the tank, operate in accordance with the manufacturer's instructions, and be permanently labeled with the operating pressure settings. [District Rules 2201 and 4694]

10. When used for wine storage, the pressure-vacuum relief valve and storage tank shall remain in a gas-tight condition, except when the operating pressure of the tank exceeds the valve set pressure. A gas-tight condition shall be determined by measuring the gas leak in accordance with the procedures in EPA Method 21. [District Rules 2201 and 4694]

11. The temperature of the wine stored in this tank shall be maintained at or below 75 degrees Fahrenheit. For each batch of wine, the operator shall achieve the storage temperature of 75 degrees Fahrenheit or less within 60 days after completing fermentation, and shall maintain records to show when the required storage temperature of 75 degrees Fahrenheit or less was achieved. [District Rules 2201 and 4694]

12. The average fermentation temperature of each batch of must fermented in this tank shall not exceed 95 oF, calculated as the average of all temperature measurements for the batch taken at least every 12 hours over the course of the fermentation. [District Rule 2201]

13. A Three-Year Compliance Plan that demonstrates compliance with the requirements of Section 5.1 of District Rule 4694 for each year of the applicable compliance period shall be submitted to the District by no later than December 1, 2012, and every three years thereafter on or before December 1. [District Rule 4694]

14. A Three-Year Compliance Plan Verification that demonstrates that the Three-Year Compliance Plan elements are in effect shall be submitted to the District by no later than July 1, 2013, and every three years thereafter on or before July 1. [District Rule 4694]

15. An Annual Compliance Plan Demonstration that shows compliance with the applicable requirements of this rule shall be submitted to the District by no later than February 1, 2012, and every year thereafter on or before February 1. [District Rule 4694]

16. Operators using CER to mitigate fermentation emissions shall perform all monitoring and recordkeeping, as established in their approved Three-Year Compliance Plan, and shall maintain all records necessary to demonstrate compliance. [District Rule 4694]

17. Operators using District Obtained Emission Reductions (DOER) shall submit payment of DOER and administrative fees to the District no later than March 1, of the first year in the applicable compliance period. [District Rule 4694]

18. For each batch of must fermented in this tank, the operator shall record the fermentation completion date, the total gallons of must fermented, the average fermentation temperature and the uncontrolled fermentation emissions and fermentation emission reductions (calculated per the emission factors given in District Rule 4694). The information shall be recorded by the tank Permit to Operate number and by wine type, stated as either red wine or white wine. [District Rules 2201 and 4694]

19. When used for wine storage, daily throughput records, including records of filling and emptying operations, the dates of such operations, a unique identifier for each batch, the volume percent ethanol in the batch, and the volume of wine transferred, shall be maintained. [District Rules 2201 and 4694]

20. When used for wine storage, the operator shall record, on a weekly basis, the total gallons of wine contained in the tank and the maximum temperature of the stored wine. [District Rule 4694]

21. Records of total annual fermentation and total annual storage emissions, including calculation methods and parameters used, shall be maintained. [District Rule 1070 and 2201]

22. Separate annual records of total red wine and total white wine produced by fermentation at this facility, based on values reported to the Alcohol and Tobacco Tax and Trade Bureau (TTB), U.S. Department of the Treasury, shall be maintained. [District Rule 1070 and 2201]

DRAFT

CONDITIONS CONTINUE ON NEXT PAGE

23. All records shall be retained on-site for a period of at least five years and made available for District inspection upon request. [District Rules 2201 and 4694]

DRAFT

San Joaquin Valley
Air Pollution Control District

AUTHORITY TO CONSTRUCT

DRAFT

PERMIT NO: N-7855-774-0 **ISSUANCE DATE:** DRAFT

LEGAL OWNER OR OPERATOR: SUTTER HOME WINERY
MAILING ADDRESS: P O BOX 248
ST HELENA, CA 94574-0248

LOCATION: 18667 N JACOB BRACK RD
LODI, CA 95242

EQUIPMENT DESCRIPTION:
20,219 GALLON WHITE WINE FERMENTATION TANK AND WINE STORAGE TANK (TANK 2127) WITH PRESSURE/VACUUM VALVE AND INSULATION

CONDITIONS

1. {98} No air contaminant shall be released into the atmosphere which causes a public nuisance. [District Rule 4102]
2. The VOC emissions rate for fermentation operations in this tank shall not exceed 1.62 lb/day per 1000 gallons of tank capacity. [District Rule 2201]
3. The ethanol content of wine stored in this tank shall not exceed 23.9 percent by volume. [District Rule 2201]
4. When this tank is used for wine storage, the daily tank throughput, in gallons, shall not exceed five times the maximum nominal tank capacity stated on the equipment description. [District Rule 2201]
5. Total combined annual VOC emissions from all wine fermentation and wine storage operations at this facility shall not exceed 292,950 lb. [District Rule 2201]
6. Combined annual VOC emissions from all wine storage operations shall be determined as the sum of the emissions for each individual wine movement based on the volume transferred in each wine movement and the batch-specific wine storage emission factor calculated using the equation(s) specified within this permit. [District Rule 2201]
7. The annual VOC wine storage emission factor (EF) for each wine transfer shall be selected from the following emission factors based on the ethanol content of the wine transferred: For wine with ethanol content less than 14 volume percent: EF = 0.198 lb-VOC/1000 gallons; For wine with ethanol content between 14 and 21 volume percent, EF = 0.314 lb-VOC/1000 gallons; For wine with ethanol content greater than 21 volume percent, EF = 0.363 lb-VOC/1000 gallon. [District Rule 2201]

CONDITIONS CONTINUE ON NEXT PAGE

YOU MUST NOTIFY THE DISTRICT COMPLIANCE DIVISION AT (209) 557-6400 WHEN CONSTRUCTION IS COMPLETED AND PRIOR TO OPERATING THE EQUIPMENT OR MODIFICATIONS AUTHORIZED BY THIS AUTHORITY TO CONSTRUCT. This is NOT a PERMIT TO OPERATE. Approval or denial of a PERMIT TO OPERATE will be made after an inspection to verify that the equipment has been constructed in accordance with the approved plans, specifications and conditions of this Authority to Construct, and to determine if the equipment can be operated in compliance with all Rules and Regulations of the San Joaquin Valley Unified Air Pollution Control District. Unless construction has commenced pursuant to Rule 2050, this Authority to Construct shall expire and application shall be cancelled two years from the date of issuance. The applicant is responsible for complying with all laws, ordinances and regulations of all other governmental agencies which may pertain to the above equipment.

Seyed Sadredin, Executive Director / APCO

DRAFT

DAVID WARNER, Director of Permit Services
N-7855-774-0 : Mar 23 2011 1:29PM – ROBERTSD : Joint Inspection NOT Required

8. Total annual VOC emissions from wine fermentation operations shall be determined by the following formula: Total annual VOC emissions = (Total Annual Red Wine Production-gal) x (6.2 lb-VOC/1000 gal) + (Total Annual White Wine Production-gal) x (2.5 lb-VOC/1000 gal). [District Rule 2201]

9. When used for wine storage, this tank shall be equipped with and operated with a pressure-vacuum relief valve, which shall operate within 10% of the maximum allowable working pressure of the tank, operate in accordance with the manufacturer's instructions, and be permanently labeled with the operating pressure settings. [District Rules 2201 and 4694]

10. When used for wine storage, the pressure-vacuum relief valve and storage tank shall remain in a gas-tight condition, except when the operating pressure of the tank exceeds the valve set pressure. A gas-tight condition shall be determined by measuring the gas leak in accordance with the procedures in EPA Method 21. [District Rules 2201 and 4694]

11. The temperature of the wine stored in this tank shall be maintained at or below 75 degrees Fahrenheit. For each batch of wine, the operator shall achieve the storage temperature of 75 degrees Fahrenheit or less within 60 days after completing fermentation, and shall maintain records to show when the required storage temperature of 75 degrees Fahrenheit or less was achieved. [District Rules 2201 and 4694]

12. The average fermentation temperature of each batch of must fermented in this tank shall not exceed 95 oF, calculated as the average of all temperature measurements for the batch taken at least every 12 hours over the course of the fermentation. [District Rule 2201]

13. A Three-Year Compliance Plan that demonstrates compliance with the requirements of Section 5.1 of District Rule 4694 for each year of the applicable compliance period shall be submitted to the District by no later than December 1, 2012, and every three years thereafter on or before December 1. [District Rule 4694]

14. A Three-Year Compliance Plan Verification that demonstrates that the Three-Year Compliance Plan elements are in effect shall be submitted to the District by no later than July 1, 2013, and every three years thereafter on or before July 1. [District Rule 4694]

15. An Annual Compliance Plan Demonstration that shows compliance with the applicable requirements of this rule shall be submitted to the District by no later than February 1, 2012, and every year thereafter on or before February 1. [District Rule 4694]

16. Operators using CER to mitigate fermentation emissions shall perform all monitoring and recordkeeping, as established in their approved Three-Year Compliance Plan, and shall maintain all records necessary to demonstrate compliance. [District Rule 4694]

17. Operators using District Obtained Emission Reductions (DOER) shall submit payment of DOER and administrative fees to the District no later than March 1, of the first year in the applicable compliance period. [District Rule 4694]

18. For each batch of must fermented in this tank, the operator shall record the fermentation completion date, the total gallons of must fermented, the average fermentation temperature and the uncontrolled fermentation emissions and fermentation emission reductions (calculated per the emission factors given in District Rule 4694). The information shall be recorded by the tank Permit to Operate number and by wine type, stated as either red wine or white wine. [District Rules 2201 and 4694]

19. When used for wine storage, daily throughput records, including records of filling and emptying operations, the dates of such operations, a unique identifier for each batch, the volume percent ethanol in the batch, and the volume of wine transferred, shall be maintained. [District Rules 2201 and 4694]

20. When used for wine storage, the operator shall record, on a weekly basis, the total gallons of wine contained in the tank and the maximum temperature of the stored wine. [District Rule 4694]

21. Records of total annual fermentation and total annual storage emissions, including calculation methods and parameters used, shall be maintained. [District Rule 1070 and 2201]

22. Separate annual records of total red wine and total white wine produced by fermentation at this facility, based on values reported to the Alcohol and Tobacco Tax and Trade Bureau (TTB), U.S. Department of the Treasury, shall be maintained. [District Rule 1070 and 2201]

DRAFT

CONDITIONS CONTINUE ON NEXT PAGE

23. All records shall be retained on-site for a period of at least five years and made available for District inspection upon request. [District Rules 2201 and 4694]

DRAFT

San Joaquin Valley
Air Pollution Control District

AUTHORITY TO CONSTRUCT

DRAFT

PERMIT NO: N-7855-775-0 **ISSUANCE DATE:** DRAFT

LEGAL OWNER OR OPERATOR: SUTTER HOME WINERY
MAILING ADDRESS: P O BOX 248
ST HELENA, CA 94574-0248

LOCATION: 18667 N JACOB BRACK RD
LODI, CA 95242

EQUIPMENT DESCRIPTION:
20,219 GALLON WHITE WINE FERMENTATION TANK AND WINE STORAGE TANK (TANK 2128) WITH PRESSURE/VACUUM VALVE AND INSULATION

CONDITIONS

1. {98} No air contaminant shall be released into the atmosphere which causes a public nuisance. [District Rule 4102]
2. The VOC emissions rate for fermentation operations in this tank shall not exceed 1.62 lb/day per 1000 gallons of tank capacity. [District Rule 2201]
3. The ethanol content of wine stored in this tank shall not exceed 23.9 percent by volume. [District Rule 2201]
4. When this tank is used for wine storage, the daily tank throughput, in gallons, shall not exceed five times the maximum nominal tank capacity stated on the equipment description. [District Rule 2201]
5. Total combined annual VOC emissions from all wine fermentation and wine storage operations at this facility shall not exceed 292,950 lb. [District Rule 2201]
6. Combined annual VOC emissions from all wine storage operations shall be determined as the sum of the emissions for each individual wine movement based on the volume transferred in each wine movement and the batch-specific wine storage emission factor calculated using the equation(s) specified within this permit. [District Rule 2201]
7. The annual VOC wine storage emission factor (EF) for each wine transfer shall be selected from the following emission factors based on the ethanol content of the wine transferred: For wine with ethanol content less than 14 volume percent: EF = 0.198 lb-VOC/1000 gallons; For wine with ethanol content between 14 and 21 volume percent, EF = 0.314 lb-VOC/1000 gallons; For wine with ethanol content greater than 21 volume percent, EF = 0.363 lb-VOC/1000 gallon. [District Rule 2201]

CONDITIONS CONTINUE ON NEXT PAGE

YOU MUST NOTIFY THE DISTRICT COMPLIANCE DIVISION AT (209) 557-6400 WHEN CONSTRUCTION IS COMPLETED AND PRIOR TO OPERATING THE EQUIPMENT OR MODIFICATIONS AUTHORIZED BY THIS AUTHORITY TO CONSTRUCT. This is NOT a PERMIT TO OPERATE. Approval or denial of a PERMIT TO OPERATE will be made after an inspection to verify that the equipment has been constructed in accordance with the approved plans, specifications and conditions of this Authority to Construct, and to determine if the equipment can be operated in compliance with all Rules and Regulations of the San Joaquin Valley Unified Air Pollution Control District. Unless construction has commenced pursuant to Rule 2050, this Authority to Construct shall expire and application shall be cancelled two years from the date of issuance. The applicant is responsible for complying with all laws, ordinances and regulations of all other governmental agencies which may pertain to the above equipment.

Seyed Sadredin, Executive Director / APCO

DRAFT

DAVID WARNER, Director of Permit Services
N-7855-775-0 : Mar 23 2011 1:28PM -- ROBERTSD : Joint Inspection NOT Required

8. Total annual VOC emissions from wine fermentation operations shall be determined by the following formula: Total annual VOC emissions = (Total Annual Red Wine Production-gal) x (6.2 lb-VOC/1000 gal) + (Total Annual White Wine Production-gal) x (2.5 lb-VOC/1000 gal). [District Rule 2201]
9. When used for wine storage, this tank shall be equipped with and operated with a pressure-vacuum relief valve, which shall operate within 10% of the maximum allowable working pressure of the tank, operate in accordance with the manufacturer's instructions, and be permanently labeled with the operating pressure settings. [District Rules 2201 and 4694]
10. When used for wine storage, the pressure-vacuum relief valve and storage tank shall remain in a gas-tight condition, except when the operating pressure of the tank exceeds the valve set pressure. A gas-tight condition shall be determined by measuring the gas leak in accordance with the procedures in EPA Method 21. [District Rules 2201 and 4694]
11. The temperature of the wine stored in this tank shall be maintained at or below 75 degrees Fahrenheit. For each batch of wine, the operator shall achieve the storage temperature of 75 degrees Fahrenheit or less within 60 days after completing fermentation, and shall maintain records to show when the required storage temperature of 75 degrees Fahrenheit or less was achieved. [District Rules 2201 and 4694]
12. The average fermentation temperature of each batch of must fermented in this tank shall not exceed 95 oF, calculated as the average of all temperature measurements for the batch taken at least every 12 hours over the course of the fermentation. [District Rule 2201]
13. A Three-Year Compliance Plan that demonstrates compliance with the requirements of Section 5.1 of District Rule 4694 for each year of the applicable compliance period shall be submitted to the District by no later than December 1, 2012, and every three years thereafter on or before December 1. [District Rule 4694]
14. A Three-Year Compliance Plan Verification that demonstrates that the Three-Year Compliance Plan elements are in effect shall be submitted to the District by no later than July 1, 2013, and every three years thereafter on or before July 1. [District Rule 4694]
15. An Annual Compliance Plan Demonstration that shows compliance with the applicable requirements of this rule shall be submitted to the District by no later than February 1, 2012, and every year thereafter on or before February 1. [District Rule 4694]
16. Operators using CER to mitigate fermentation emissions shall perform all monitoring and recordkeeping, as established in their approved Three-Year Compliance Plan, and shall maintain all records necessary to demonstrate compliance. [District Rule 4694]
17. Operators using District Obtained Emission Reductions (DOER) shall submit payment of DOER and administrative fees to the District no later than March 1, of the first year in the applicable compliance period. [District Rule 4694]
18. For each batch of must fermented in this tank, the operator shall record the fermentation completion date, the total gallons of must fermented, the average fermentation temperature and the uncontrolled fermentation emissions and fermentation emission reductions (calculated per the emission factors given in District Rule 4694). The information shall be recorded by the tank Permit to Operate number and by wine type, stated as either red wine or white wine. [District Rules 2201 and 4694]
19. When used for wine storage, daily throughput records, including records of filling and emptying operations, the dates of such operations, a unique identifier for each batch, the volume percent ethanol in the batch, and the volume of wine transferred, shall be maintained. [District Rules 2201 and 4694]
20. When used for wine storage, the operator shall record, on a weekly basis, the total gallons of wine contained in the tank and the maximum temperature of the stored wine. [District Rule 4694]
21. Records of total annual fermentation and total annual storage emissions, including calculation methods and parameters used, shall be maintained. [District Rule 1070 and 2201]
22. Separate annual records of total red wine and total white wine produced by fermentation at this facility, based on values reported to the Alcohol and Tobacco Tax and Trade Bureau (TTB), U.S. Department of the Treasury, shall be maintained. [District Rule 1070 and 2201]

DRAFT

CONDITIONS CONTINUE ON NEXT PAGE

23. All records shall be retained on-site for a period of at least five years and made available for District inspection upon request. [District Rules 2201 and 4694]

DRAFT

San Joaquin Valley
Air Pollution Control District

AUTHORITY TO CONSTRUCT

DRAFT

PERMIT NO: N-7855-776-0 **ISSUANCE DATE:** DRAFT

LEGAL OWNER OR OPERATOR: SUTTER HOME WINERY
MAILING ADDRESS: P O BOX 248
ST HELENA, CA 94574-0248

LOCATION: 18667 N JACOB BRACK RD
LODI, CA 95242

EQUIPMENT DESCRIPTION:
20,219 GALLON WHITE WINE FERMENTATION TANK AND WINE STORAGE TANK (TANK 2129) WITH PRESSURE/VACUUM VALVE AND INSULATION

CONDITIONS

1. {98} No air contaminant shall be released into the atmosphere which causes a public nuisance. [District Rule 4102]
2. The VOC emissions rate for fermentation operations in this tank shall not exceed 1.62 lb/day per 1000 gallons of tank capacity. [District Rule 2201]
3. The ethanol content of wine stored in this tank shall not exceed 23.9 percent by volume. [District Rule 2201]
4. When this tank is used for wine storage, the daily tank throughput, in gallons, shall not exceed five times the maximum nominal tank capacity stated on the equipment description. [District Rule 2201]
5. Total combined annual VOC emissions from all wine fermentation and wine storage operations at this facility shall not exceed 292,950 lb. [District Rule 2201]
6. Combined annual VOC emissions from all wine storage operations shall be determined as the sum of the emissions for each individual wine movement based on the volume transferred in each wine movement and the batch-specific wine storage emission factor calculated using the equation(s) specified within this permit. [District Rule 2201]
7. The annual VOC wine storage emission factor (EF) for each wine transfer shall be selected from the following emission factors based on the ethanol content of the wine transferred: For wine with ethanol content less than 14 volume percent: EF = 0.198 lb-VOC/1000 gallons; For wine with ethanol content between 14 and 21 volume percent, EF = 0.314 lb-VOC/1000 gallons; For wine with ethanol content greater than 21 volume percent, EF = 0.363 lb-VOC/1000 gallon. [District Rule 2201]

CONDITIONS CONTINUE ON NEXT PAGE

YOU MUST NOTIFY THE DISTRICT COMPLIANCE DIVISION AT (209) 557-6400 WHEN CONSTRUCTION IS COMPLETED AND PRIOR TO OPERATING THE EQUIPMENT OR MODIFICATIONS AUTHORIZED BY THIS AUTHORITY TO CONSTRUCT. This is NOT a PERMIT TO OPERATE. Approval or denial of a PERMIT TO OPERATE will be made after an inspection to verify that the equipment has been constructed in accordance with the approved plans, specifications and conditions of this Authority to Construct, and to determine if the equipment can be operated in compliance with all Rules and Regulations of the San Joaquin Valley Unified Air Pollution Control District. Unless construction has commenced pursuant to Rule 2050, this Authority to Construct shall expire and application shall be cancelled two years from the date of issuance. The applicant is responsible for complying with all laws, ordinances and regulations of all other governmental agencies which may pertain to the above equipment.

Seyed Sadredin, Executive Director / APCO

DRAFT

DAVID WARNER, Director of Permit Services
N-7855-776-0 : Mar 23 2011 1:29PM -- ROBERTSD : Joint Inspection NOT Required

8. Total annual VOC emissions from wine fermentation operations shall be determined by the following formula: Total annual VOC emissions = (Total Annual Red Wine Production-gal) x (6.2 lb-VOC/1000 gal) + (Total Annual White Wine Production-gal) x (2.5 lb-VOC/1000 gal). [District Rule 2201]
9. When used for wine storage, this tank shall be equipped with and operated with a pressure-vacuum relief valve, which shall operate within 10% of the maximum allowable working pressure of the tank, operate in accordance with the manufacturer's instructions, and be permanently labeled with the operating pressure settings. [District Rules 2201 and 4694]
10. When used for wine storage, the pressure-vacuum relief valve and storage tank shall remain in a gas-tight condition, except when the operating pressure of the tank exceeds the valve set pressure. A gas-tight condition shall be determined by measuring the gas leak in accordance with the procedures in EPA Method 21. [District Rules 2201 and 4694]
11. The temperature of the wine stored in this tank shall be maintained at or below 75 degrees Fahrenheit. For each batch of wine, the operator shall achieve the storage temperature of 75 degrees Fahrenheit or less within 60 days after completing fermentation, and shall maintain records to show when the required storage temperature of 75 degrees Fahrenheit or less was achieved. [District Rules 2201 and 4694]
12. The average fermentation temperature of each batch of must fermented in this tank shall not exceed 95 oF, calculated as the average of all temperature measurements for the batch taken at least every 12 hours over the course of the fermentation. [District Rule 2201]
13. A Three-Year Compliance Plan that demonstrates compliance with the requirements of Section 5.1 of District Rule 4694 for each year of the applicable compliance period shall be submitted to the District by no later than December 1, 2012, and every three years thereafter on or before December 1. [District Rule 4694]
14. A Three-Year Compliance Plan Verification that demonstrates that the Three-Year Compliance Plan elements are in effect shall be submitted to the District by no later than July 1, 2013, and every three years thereafter on or before July 1. [District Rule 4694]
15. An Annual Compliance Plan Demonstration that shows compliance with the applicable requirements of this rule shall be submitted to the District by no later than February 1, 2012, and every year thereafter on or before February 1. [District Rule 4694]
16. Operators using CER to mitigate fermentation emissions shall perform all monitoring and recordkeeping, as established in their approved Three-Year Compliance Plan, and shall maintain all records necessary to demonstrate compliance. [District Rule 4694]
17. Operators using District Obtained Emission Reductions (DOER) shall submit payment of DOER and administrative fees to the District no later than March 1, of the first year in the applicable compliance period. [District Rule 4694]
18. For each batch of must fermented in this tank, the operator shall record the fermentation completion date, the total gallons of must fermented, the average fermentation temperature and the uncontrolled fermentation emissions and fermentation emission reductions (calculated per the emission factors given in District Rule 4694). The information shall be recorded by the tank Permit to Operate number and by wine type, stated as either red wine or white wine. [District Rules 2201 and 4694]
19. When used for wine storage, daily throughput records, including records of filling and emptying operations, the dates of such operations, a unique identifier for each batch, the volume percent ethanol in the batch, and the volume of wine transferred, shall be maintained. [District Rules 2201 and 4694]
20. When used for wine storage, the operator shall record, on a weekly basis, the total gallons of wine contained in the tank and the maximum temperature of the stored wine. [District Rule 4694]
21. Records of total annual fermentation and total annual storage emissions, including calculation methods and parameters used, shall be maintained. [District Rule 1070 and 2201]
22. Separate annual records of total red wine and total white wine produced by fermentation at this facility, based on values reported to the Alcohol and Tobacco Tax and Trade Bureau (TTB), U.S. Department of the Treasury, shall be maintained. [District Rule 1070 and 2201]

DRAFT

CONDITIONS CONTINUE ON NEXT PAGE

23. All records shall be retained on-site for a period of at least five years and made available for District inspection upon request. [District Rules 2201 and 4694]

DRAFT

Appendix K
Billing Information

Billing Information

Permit.			Fee Description	Fee Rule	Fee
C-7855-	701	-0	202,638 GALLONS	3020-05 E	$246
C-7855-	702	-0	202,638 GALLONS	3020-05 E	$246
C-7855-	703	-0	202,638 GALLONS	3020-05 E	$246
C-7855-	704	-0	202,638 GALLONS	3020-05 E	$246
C-7855-	705	-0	202,638 GALLONS	3020-05 E	$246
C-7855-	706	-0	202,638 GALLONS	3020-05 E	$246
C-7855-	707	-0	202,638 GALLONS	3020-05 E	$246
C-7855-	708	-0	202,638 GALLONS	3020-05 E	$246
C-7855-	709	-0	202,638 GALLONS	3020-05 E	$246
C-7855-	710	-0	202,638 GALLONS	3020-05 E	$246
C-7855-	711	-0	202,638 GALLONS	3020-05 E	$246
C-7855-	712	-0	202,638 GALLONS	3020-05 E	$246
C-7855-	713	-0	202,638 GALLONS	3020-05 E	$246
C-7855-	714	-0	202,638 GALLONS	3020-05 E	$246
C-7855-	715	-0	202,638 GALLONS	3020-05 E	$246
C-7855-	716	-0	202,638 GALLONS	3020-05 E	$246
C-7855-	717	-0	202,638 GALLONS	3020-05 E	$246
C-7855-	718	-0	202,638 GALLONS	3020-05 E	$246
C-7855-	719	-0	202,638 GALLONS	3020-05 E	$246
C-7855-	720	-0	202,000 GALLONS	3020-05 E	$246
C-7855-	721	-0	202,000 GALLONS	3020-05 E	$246
C-7855-	722	-0	202,000 GALLONS	3020-05 E	$246
C-7855-	723	-0	202,000 GALLONS	3020-05 E	$246
C-7855-	724	-0	202,000 GALLONS	3020-05 E	$246
C-7855-	725	-0	202,000 GALLONS	3020-05 E	$246
C-7855-	726	-0	202,000 GALLONS	3020-05 E	$246
C-7855-	727	-0	202,000 GALLONS	3020-05 E	$246
C-7855-	728	-0	202,000 GALLONS	3020-05 E	$246
C-7855-	729	-0	202,000 GALLONS	3020-05 E	$246
C-7855-	730	-0	202,000 GALLONS	3020-05 E	$246
C-7855-	731	-0	202,000 GALLONS	3020-05 E	$246
C-7855-	732	-0	202,000 GALLONS	3020-05 E	$246
C-7855-	733	-0	202,000 GALLONS	3020-05 E	$246
C-7855-	734	-0	202,000 GALLONS	3020-05 E	$246
C-7855-	735	-0	202,000 GALLONS	3020-05 E	$246
C-7855-	736	-0	202,000 GALLONS	3020-05 E	$246
C-7855-	737	-0	202,000 GALLONS	3020-05 E	$246
C-7855-	738	-0	202,000 GALLONS	3020-05 E	$246
C-7855-	739	-0	366,000 GALLONS	3020-05 E	$246
C-7855-	740	-0	366,000 GALLONS	3020-05 E	$246
C-7855-	741	-0	366,000 GALLONS	3020-05 E	$246

C-7855-	742	-0	366,000 GALLONS	3020-05 E	$246
C-7855-	743	-0	366,000 GALLONS	3020-05 E	$246
C-7855-	744	-0	366,000 GALLONS	3020-05 E	$246
C-7855-	745	-0	366,000 GALLONS	3020-05 E	$246
C-7855-	746	-0	366,000 GALLONS	3020-05 E	$246
C-7855-	747	-0	20,219 GALLONS	3020-05 C	$135
C-7855-	748	-0	20,219 GALLONS	3020-05 C	$135
C-7855-	749	-0	20,219 GALLONS	3020-05 C	$135
C-7855-	750	-0	20,219 GALLONS	3020-05 C	$135
C-7855-	751	-0	20,219 GALLONS	3020-05 C	$135
C-7855-	752	-0	13,487 GALLONS	3020-05 B	$93
C-7855-	753	-0	13,487 GALLONS	3020-05 B	$93
C-7855-	754	-0	13,487 GALLONS	3020-05 B	$93
C-7855-	755	-0	13,487 GALLONS	3020-05 B	$93
C-7855-	756	-0	13,487 GALLONS	3020-05 B	$93
C-7855-	757	-0	8,031 GALLONS	3020-05 B	$93
C-7855-	758	-0	8,031 GALLONS	3020-05 B	$93
C-7855-	759	-0	8,031 GALLONS	3020-05 B	$93
C-7855-	760	-0	8,031 GALLONS	3020-05 B	$93
C-7855-	761	-0	8,031 GALLONS	3020-05 B	$93
C-7855-	762	-0	8,031 GALLONS	3020-05 B	$93
C-7855-	763	-0	8,031 GALLONS	3020-05 B	$93
C-7855-	764	-0	8,031 GALLONS	3020-05 B	$93
C-7855-	765	-0	8,031 GALLONS	3020-05 B	$93
C-7855-	766	-0	8,031 GALLONS	3020-05 B	$93
C-7855-	767	-0	13,487 GALLONS	3020-05 B	$93
C-7855-	768	-0	13,487 GALLONS	3020-05 B	$93
C-7855-	769	-0	13,487 GALLONS	3020-05 B	$93
C-7855-	770	-0	13,487 GALLONS	3020-05 B	$93
C-7855-	771	-0	13,487 GALLONS	3020-05 B	$93
C-7855-	772	-0	20,219 GALLONS	3020-05 C	$135
C-7855-	773	-0	20,219 GALLONS	3020-05 C	$135
C-7855-	774	-0	20,219 GALLONS	3020-05 C	$135
C-7855-	775	-0	20,219 GALLONS	3020-05 C	$135
C-7855-	776	-0	20,219 GALLONS	3020-05 C	$135