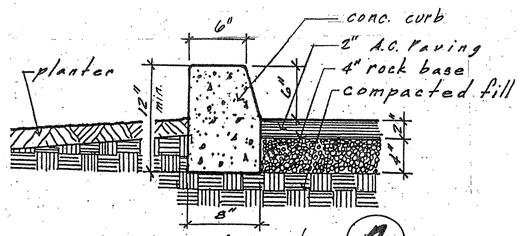

Curb 2

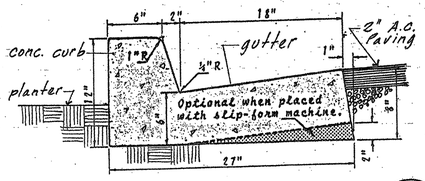

Curb - Gutter 3

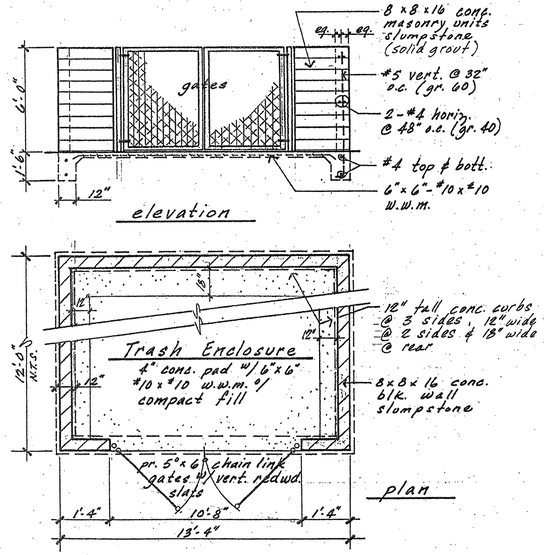

Detail 1

N.T.S.

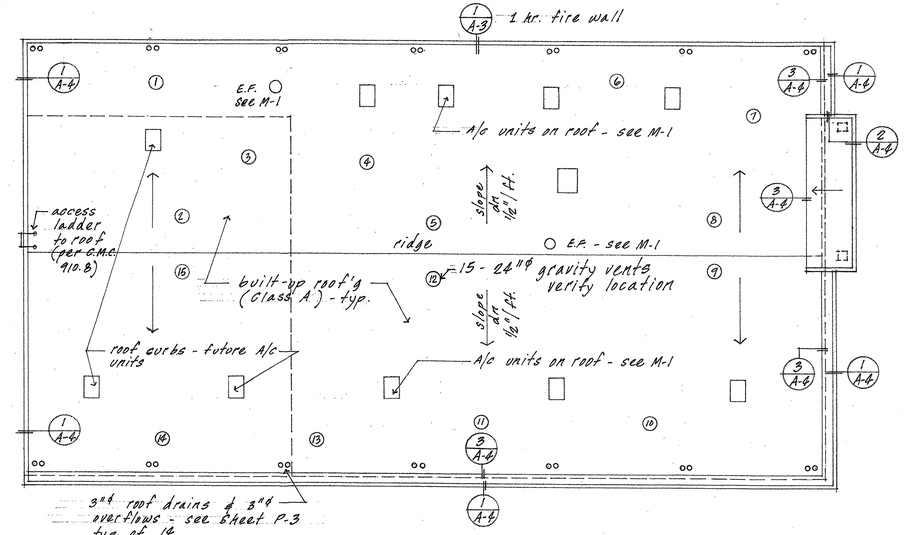

Roof Plan 1/16" = 1'-0"

GENERAL NOTES

MAIN EXIT DOORS shall have a sign indicating.. UNLOCKED DURING BUSINESS HOURS. UBC 1004.3

EXIT DOORS shall have latching hardware that is "openable from the inside without the use of a key or special knowledge or effort". UBC 1004.3

Provide approved premises ADDRESS visible from street with contrasting numbers with minimum 6" high characters and 3/4" stroke. UFC 901.4.4

Provide attic ventilation at the rate of 1/300 of 18,000 sq. ft. which is 60 sq. ft. Provide a minimum of 15 - 24" gravity roof ventilators on the roof. UBC 1505.3

All exterior signage requires a separate permit.

A minimum of 5% of all desks/counter lengths shall be handicapped accessible. Counter height 28" - 34" AFF with employee knee space 30" wide x 27" high x 19" deep. Start at reception desk.

Outlets for power, phone, or data shall be installed a minimum 15" AFF.

Switches and all other controls shall be installed 36"-48" AFF.

Code limits the number of duplex convenience outlets per circuit:
a) Maximum 4 per 15 amp circuit.
b) Maximum 6 per 20 amp circuit.

A minimum of two 2A:10B:C fire extinguishers shall be provided. Travel distance to reach one shall not exceed 75 feet and mounting height shall not exceed 60". UFC Sec. 1002

Provide attic draft stops in all attic and overhang areas and other concealed spaces which does not exceed 9,000 sq. ft. and greatest horizontal dimension does not exceed 100'.

This project will conform to the 2001 edition of the Calif. Building Code, Calif. Mechanical Code, Calif. Plumbing Code, the 2001 edition of the California Fire Code and the 1999 edition of the National Electric Code & 2001 C.E.C.

Occupant load capacity is to be posted in a conspicuous place in per U.B.C. 1007.2.6.

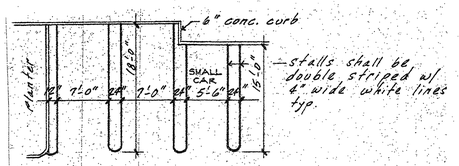

Typ. Parking Stalls

per Stan. Co. Standards

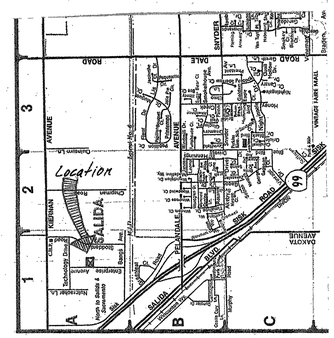

Location Map

N.T.S.

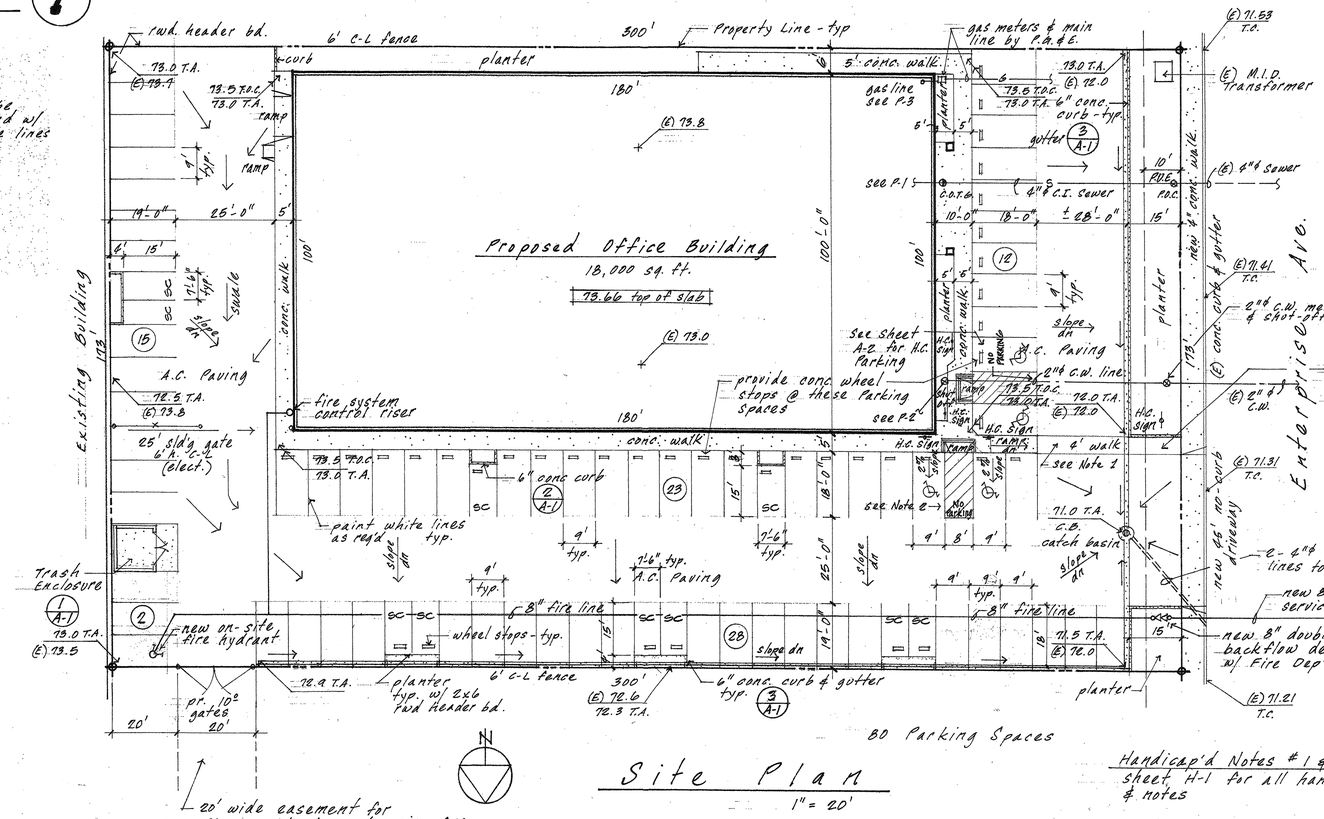

Site Plan

1" = 20'

Handicap'd Notes #1 & 2 - see sheet H-1 for all handicap'd details & notes

Deferred Submittals - see Structural Sheet S0.1, Note 8, Open Web Steel Joists, Metal Plate Wood Trusses.

SYMBOLS (Site Plan)

(E) 99.91	=	top of existing grade
T.S.	=	top of existing conc. sidewalk
T.O.C.	=	top of existing conc. curb or conc. slab
100.00 @ T.A.	=	new grade at top of asphalt finish
99.80 @ C.B.	=	new grade at top of conc. catch basin
h.p.	=	high point of new asphalt finish
	=	conc. curb - 6" high above asphalt finish
	=	slope new finish down
	=	conc. slab or walk - min. 4" thick
A.C. paving-typ.	=	2" asphalt paving o/ 4" compacted road base - min.
(E)	=	existing item

INDEX TO DRAWINGS

A1 - Site Plan, Roof Plan & Details
A2 - Floor Plan & Notes
A3 - Exterior Elevations & Details
A4 - Cross Sections & Details
A5 - Interior Elevations, Door & Window Detail, Restroom Plans
A6 - Reflected Ceiling Plan & Details
H1 - Accessibility Standards
S0.1 - Typical Structural Notes & Details
S2.1 - Foundation Plan & Details
S2.2 - Roof Framing Plan & Details
S8.1 - Structural Details
P1 - Sewer Plan
P2 - Water Plan
P3 - Gas Plan
P4 - Plumbing Details
M-1 - Air Distribution Plan
M-2 - Equipment Notes & Details
M-3-4 Title 24 Forms
E1 - Lighting Plan & Details
E2-3 Power Plan & Details
E4 - Power Roof Plan
E5 - One Line Diagram & Panel Schedules
E6 - Title 24 Forms, Notes & Details
L-1 - Irrigation & Landscaping Plans & Notes

Revised 12-12-04
10-27-04

SJVAPCD OFFICE BUILDING

MODESTO, CA

Robert Hart, Architect
Architecture and Planning
Creative Residences
3505 Columbine Dr.
Modesto, CA 95356
(209) 578-3353

Sheet No. A-1 Of Sheets

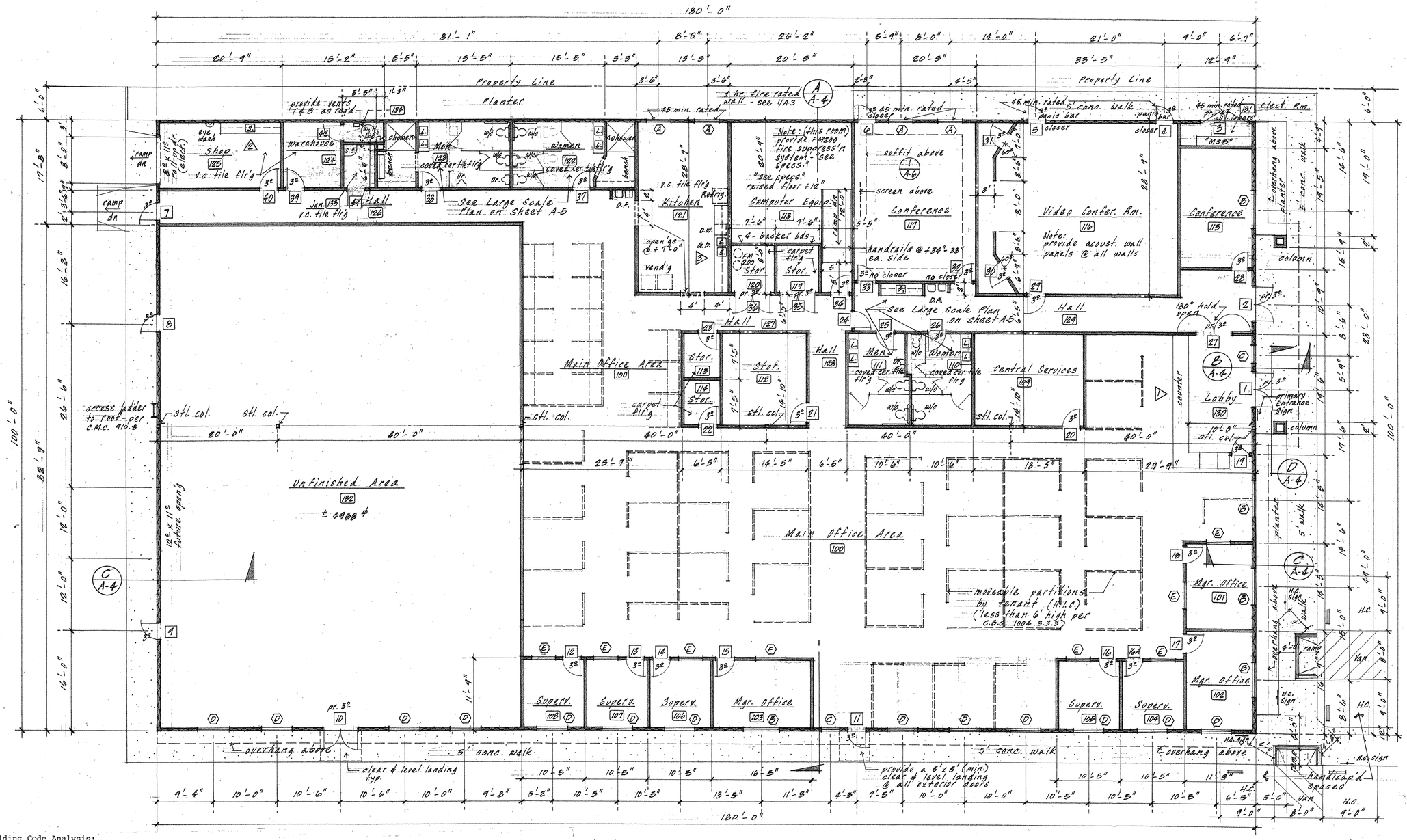

WINDOW SCHEDULE

Exterior

(A) - 4'-0" W. x 4'-0" H. nail-on steel frame and double glazed wire glass, 45 min. fire rated.

(B) - 6'-0" W. x 4'-0" H. nail-on aluminum frame and double glazed double strength glass, mill finish.

(C) - 3'-0" W. x 4'-0" H. nail-on aluminum frame and 1/4" tempered plate glass, mill finish.

(D) - 5'-0" W. x 4'-0" H. nail-on aluminum frame and double glazed double strength glass, mill finish.

Interior

(E) - 4'-0" W. x 4'0" H. nail-on aluminum frame and 1/4" tempered plate glass, mill finish.

(F) - 5'0" W. x 4'-0" H. nail-on aluminum frame and double glazed double strength glass, mill finish.

DOOR SCHEDULE

1, 2 & 10 - pr. 3'-0" x 7'-0" aluminum and glass doors w/1/4" tempered glass. See Specs.

3 - pr. 4'-0" x 6'-8" steel door and frame. 45 min. fire rated.

4, 5 & 6 - 3-0" x 6'8" steel doors and frames. 45 min. fire rated.

7, 8 & 9 - 3'0" x 6'8" Steel doors and frames.

11 - 3'0" x 7'-0" aluminum and glass door w/1/4" tempered glass. See Specs.

12 thru 26 - 3'0" x 6'8" solid core wood door and steel frame.

27, 35 & 36 - pr. 3'-0" x 6'-8" solid core wood doors and steel frame

28 thru 34 & 37 - 42 - 3'0" x 6'8" solid core wood door and steel frame

NOTE: Provide 6" x 24" view window in the door at Door Nos. 28, 32, 33 and 34. (wire glass @ door #34)

HARDWARE

Provide locksets on all doors except push and pull hardware at Door Nos. 25, 26, 37 and 38. Door No. 34 shall have a special push button type lockset. Verify with tenant.
Provide closer @ all fire rated doors

Building Code Analysis:

1. Occupancy Type
   Office Area - 13,000 sq. ft. = B
   Unfinished Area - 5000 sq. ft. = future B
2. One Story
3. Construction Type = 5N with an automatic fire sprinkler system
4. Allowable Floor Area = 8,000 sq. ft. x 3 (fire sprinklers) = 24,000 sq. ft.
   This building is only 18,000 sq. ft.
5. Occupant Load
   Office Area = 7100 sq. ft. ÷ 100 = 71 people
   Kitchen/Lunch Rm. = 420 sq. ft. ÷ 15 = 28 people
   Total = 99 people

   (omit Restrooms, Halls, Storage Rms., Shop and Warehouse)

   Separate Use Area - separate entrances and exits.

   Conference = 520 sq. ft. ÷ 15 = 35 people (half of the people exit to the exterior)
   35 ÷ 2 = 18 people

   Video Conference Rm. = 924 sq. ft. ÷ 15 = 62 people (all exit to the exterior)

   Conference = 180 sq. ft. ÷ 15 = 12 people

   Total = 30 people

SYMBOLS

- 2 x 6 @16" o.c. - wood stud walls w/stucco finish @exterior and 5/8" gyp. bd. finish @ Interior w/R-19 insulation. Type "X" @ 1 Hr. Wall
- 3-5/8" x 25 ga. stl. studs @16" o.c. w/5/8" gyp. bd. finish each side w/sound batts (textured and painted finish) — see 2/A-3
- stl. door frame w/solid core door (6'-8" high), painted w/lever lockset hardware (handicapped)(hollow core steel doors @ exterior)
- w/c — water closet (handicapped) - See Plumbing Plan
- L. S. — 12" x 14" lavatory or s.s. sink See Plumbing Plan
- Ur. — Urinal - See Plumbing Plan
- D.F. — Drinking fountain - See Plumbing Plan
- 101 — Room number
- 8 — Door number - See Sheet A-5
- A — Window number - See Sheet A-5
- (N) — New Item
- Interior Elevations (cabinets) - see A-5

N

Floor Plan
18,000 sq. ft. 1/8" = 1'-0"

See Sheet A-5 for Door & Window Details & Interior Elevations

Room # 118 only - provide a FM200 Fire Suppression System (no Fire Sprinklers) "see Specs" - provide fire rated walls & 5/8" gyp. bd. ceiling at the bottom of roof joists w/ sealed penetrations

Note: Provide Primary Entrance Signage & Tactile Exit Signs per C.B.C. 1003.2.8.6.1

See Sheet H-1 for all Handicap'd Notes & Details

Note: Fire Sprinklers - Separate permit for fire sprinkler system shall be obtained from Stanislaus Consolidated Fire Protection District". Submit 3 sets of fire sprinkler system plans to the district office at 3705 Oakdale Road, Modesto, CA 95357 to obtain the required permit.

AUTOMATIC FIRE SPRINKLER SYSTEM

The Automatic Fire Sprinkler System Contractor shall provide an approved automatic fire sprinkler system at all areas of the Market and Future Tenant Building. These systems shall be installed as per Chapter 9, 1997 UBC and NFPA-13. The sprinkler contractor shall provide shop drawings to be approved by the local Fire Dept. and Building Dept. All valves controlling sprinkler system water supply and flow shall be electrically monitored and the signal shall be automatically transmitted to a UL listed station when the number of heads exceeds 100, MFC 1003.3.1.

Revised 12-12-04
10-27-04

SJVAPCD OFFICE BUILDING
MODESTO, CA

Robert Hart, Architect
Architecture and Planning
Creative Residences
2606 Columbine Dr.
Modesto, CA 95356
(209) 578-2553

Sheet No. A-2 Of Sheets

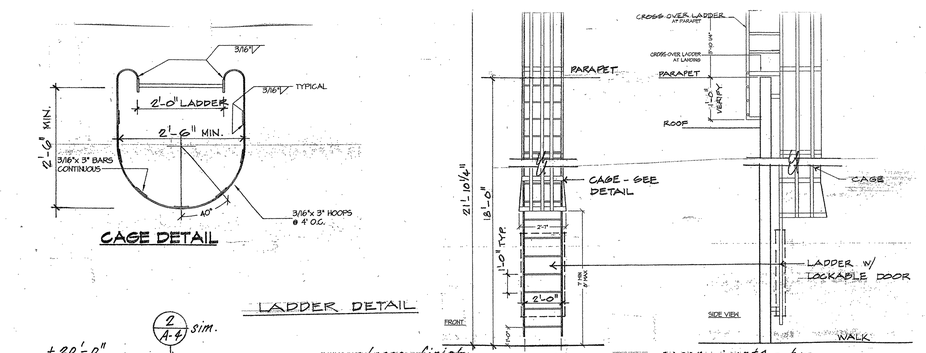

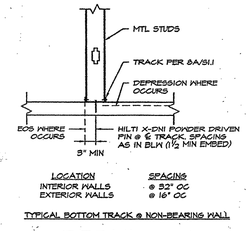

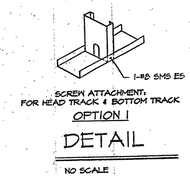

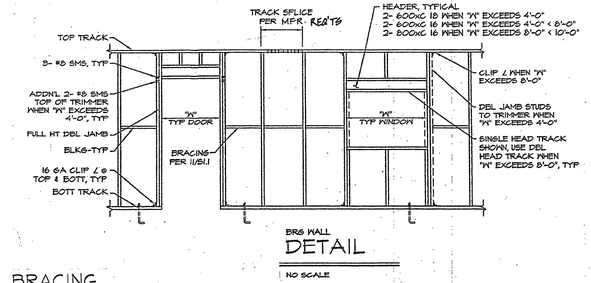

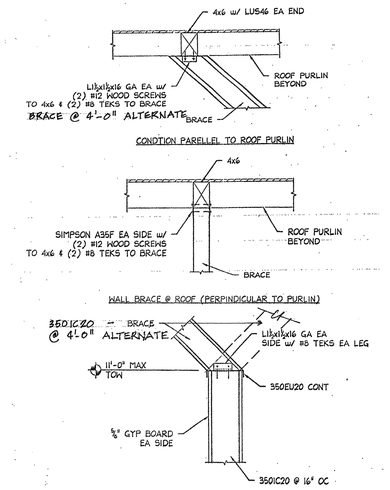

2 WALL BRACING

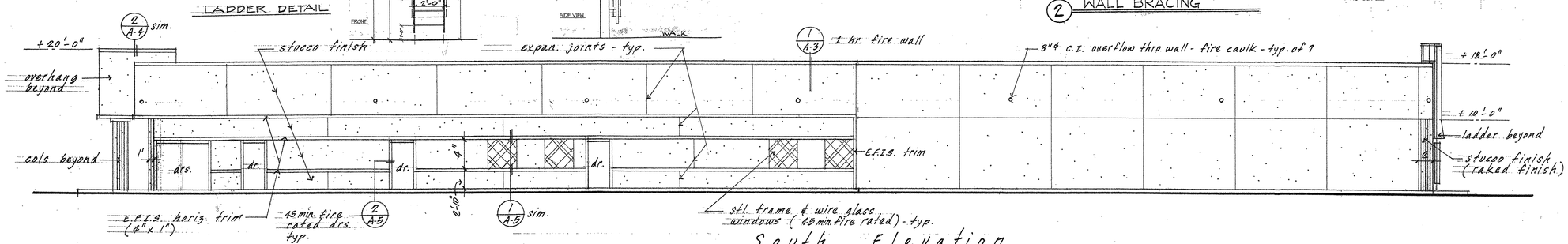

South Elevation

1 hr. fire rated wall

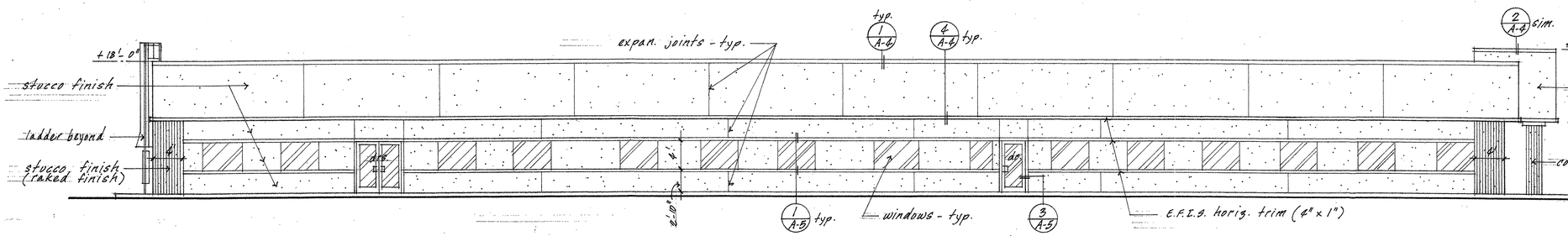

North Elevation

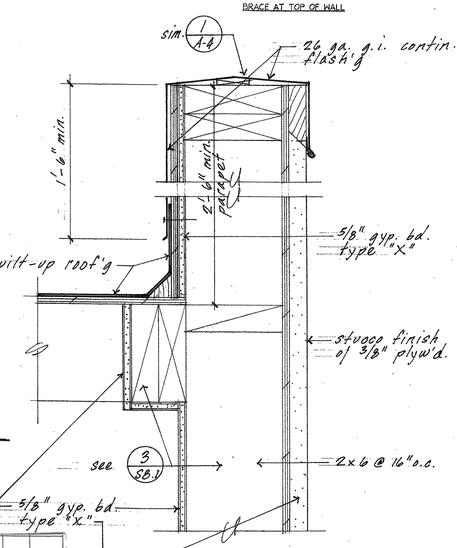

C.B.C. 2001

Interior	17-1.3[7,18]	2" by 4" (51 mm by 102 mm) wood studs 24" (610 mm) on center with 5/8" (15.9 mm) Type X gypsum wallboard[7] applied vertically or horizontally nailed with 6d cooler[19] or wallboard[19] nails at 7" (178 mm) on center with end joints on nailing members. Stagger joints each side.			45/16
Exterior	18-1.3[7,18]	2" by 4" (51 mm by 102 mm) wood studs 16" (406 mm) on center with 7/8" (22 mm) cement plaster (measured from the face of studs) on the exterior surface with interior surface treatment as required for interior wood stud partitions in this table. Plaster mix 1:4 for scratch coat and 1:5 for brown coat, by volume, cement to sand.			Varies

1 Hr. Fire Wall (1)

3" = 1'-0"

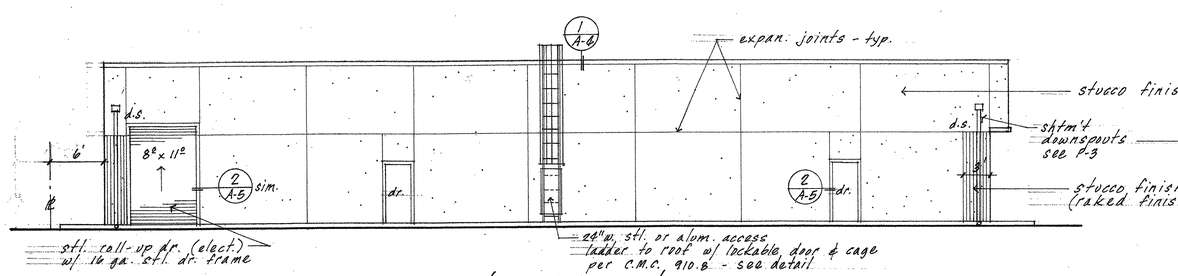

East Elevation

scale 1/8" = 1'-0"

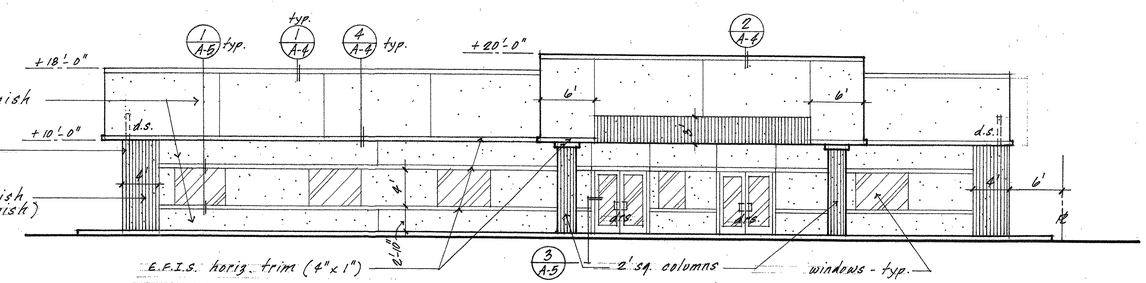

West Elevation

Revised 12-12-04
10-27-04

SJVAPCD OFFICE BUILDING

MODESTO, CA

Robert Hart, Architect
Architecture and Planning
Creative Residences
3506 Columbine Dr.
Modesto, CA 95356
(209) 578-3263

Sheet No. A-3 of sheets

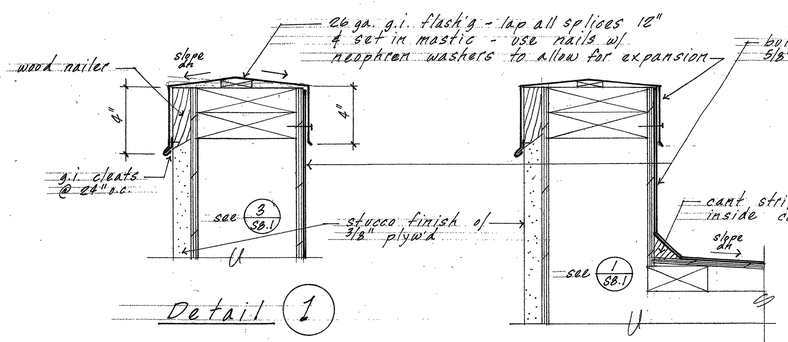

Detail 1

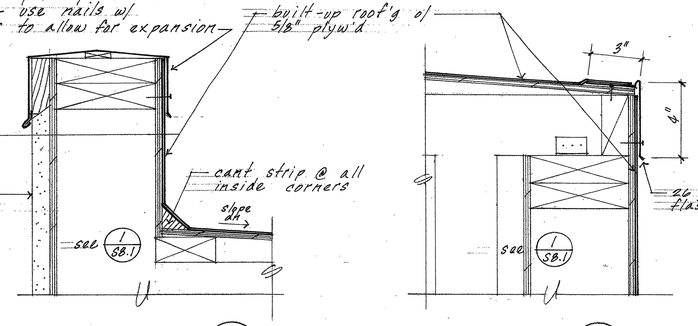

Detail 2

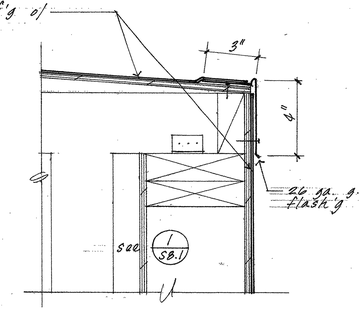

Detail 3

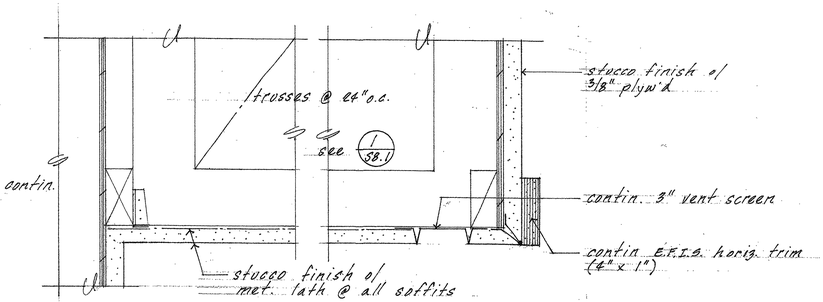

Detail 4

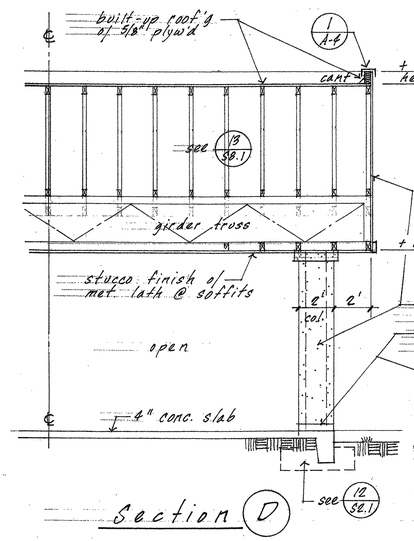

Section D

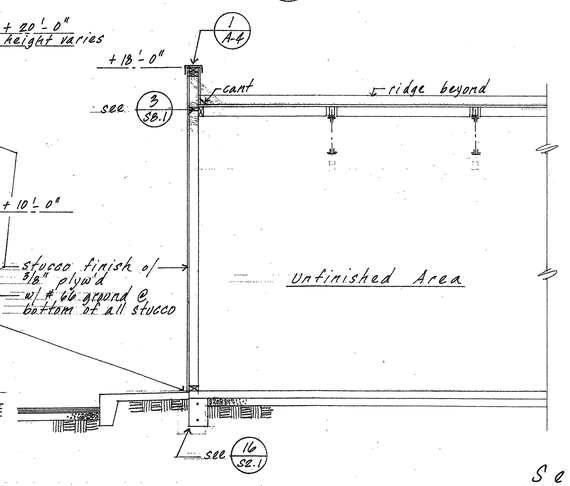

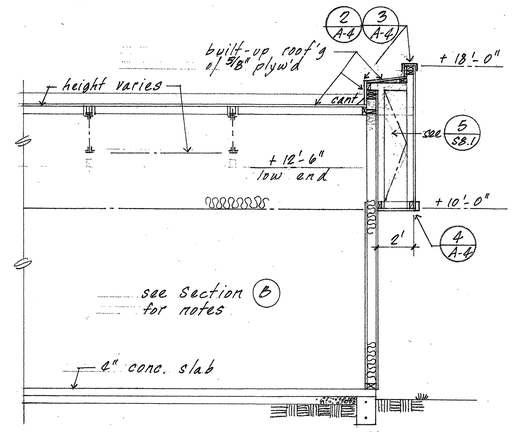

Section C

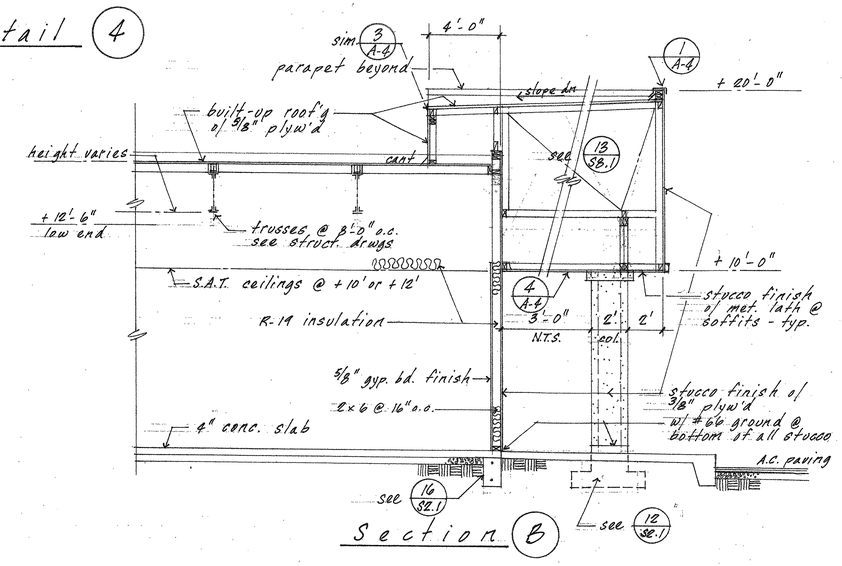

Section B

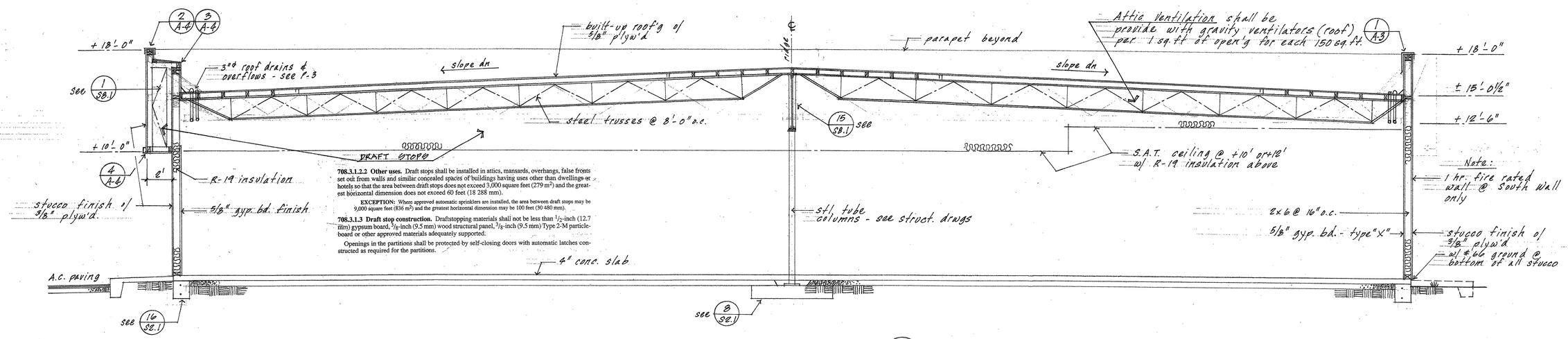

708.3.1.2.2 Other uses. Draft stops shall be installed in attics, mansards, overhangs, false fronts set out from walls and similar concealed spaces of buildings having uses other than dwellings or hotels so that the area between draft stops does not exceed 3,000 square feet (279 m²) and the greatest horizontal dimension does not exceed 60 feet (18 288 mm).

EXCEPTION: Where approved automatic sprinklers are installed, the area between draft stops may be 9,000 square feet (836 m²) and the greatest horizontal dimension may be 100 feet (30 480 mm).

708.3.1.3 Draft stop construction. Draftstopping materials shall not be less than 1/2-inch (12.7 mm) gypsum board, 3/8-inch (9.5 mm) wood structural panel, 3/8-inch (9.5 mm) Type 2-M particleboard or other approved materials adequately supported.

Openings in the partitions shall be protected by self-closing doors with automatic latches constructed as required for the partitions.

Section A

Scale 1/4" = 1'-0"

SJVAPCD OFFICE BUILDING

MODESTO, CA

Robert Hart, Architect

Architecture and Planning
Creative Residences

3605 Columbine Dr.
Modesto, CA 95356
(209) 578-3383

10-27-04

Sheet No.

A-4

Of Sheets

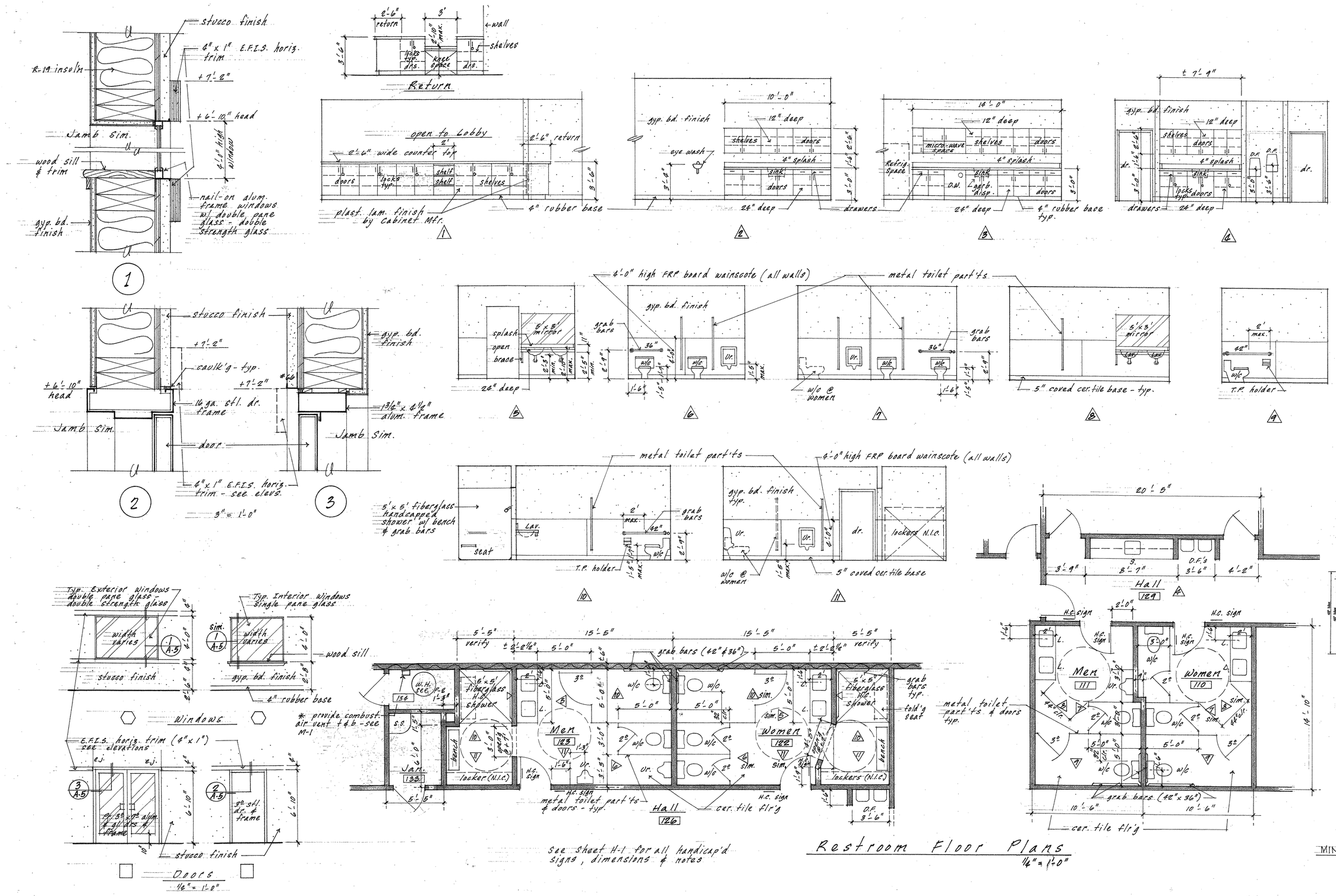

Revised 12-12-04
10-27-04

SJVAPCD OFFICE BUILDING
MODESTO, CA

Robert Hart, Architect
Architecture and Planning
Creative Residences
3505 Columbine Dr.
Modesto, CA 95356
(209) 578-3353

Sheet No.
A-5
of Sheets

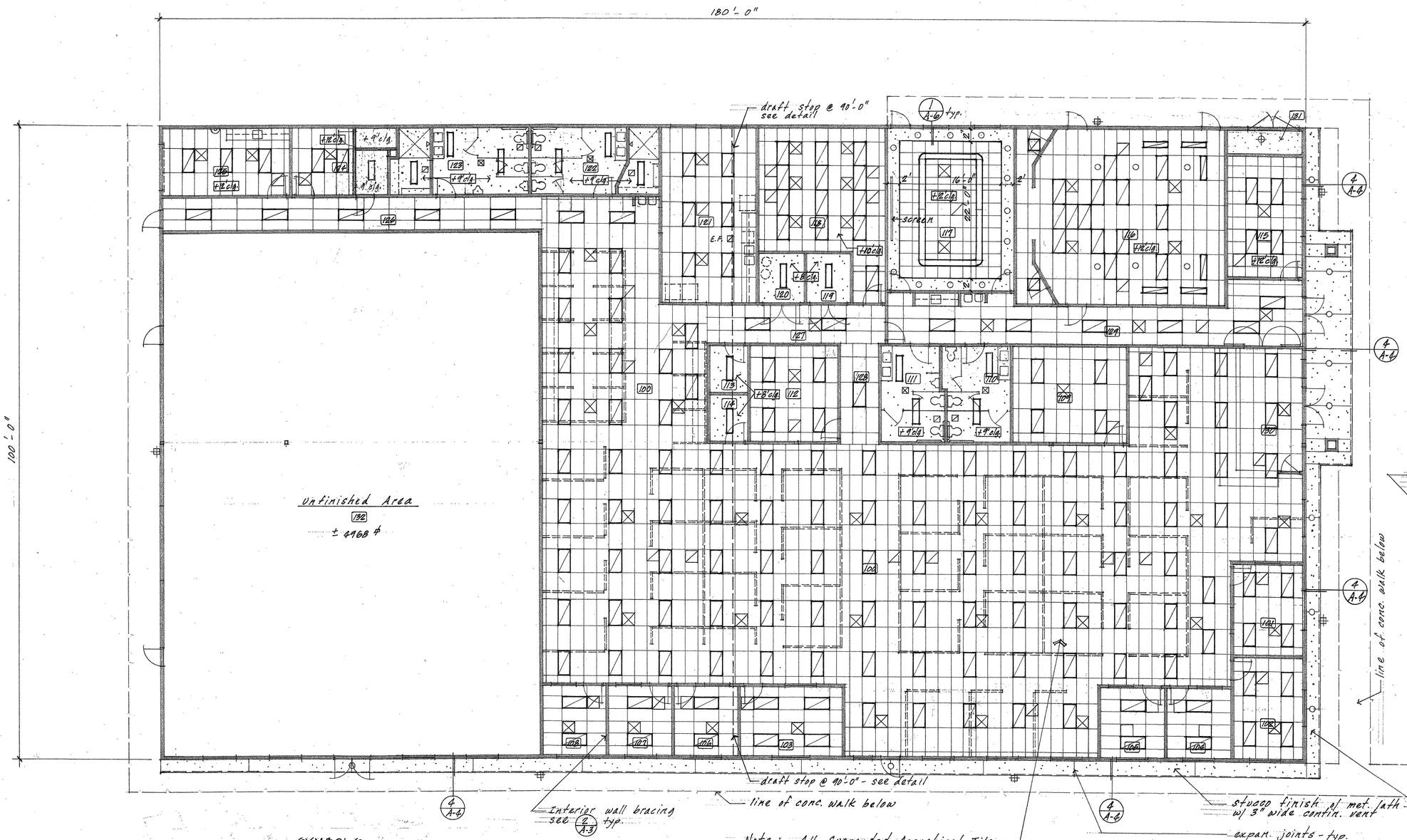

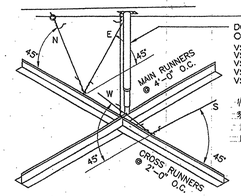

DONN COMPRESION POST OR EQUAL @ 12'-0" O.C.

VSA 12	1'-6" to 2'-6"
VSA 22	2'-6" to 4'
VSA 47	4' to 7'
VSA 710	7' to 10'
VSA 1012	10' to 12'

OR USE

1/2"ø EMT	CONDUIT UP TO 2'-0" ht.
3/4"ø EMT	CONDUIT UP TO 4'-0" ht.
1"ø EMT	CONDUIT UP TO 6'-0" ht.
1 1/2"ø EMT	CONDUIT UP TO 8'-0" ht.

LIGHTING FIXTURES & CEILING MOUNTED AIR REGISTERS OR RETURNS ARE TO BE SUPPORTED INDEPENDENT OF T-BAR GRID. SUPPORT WITH 12 GA. WIRE HANGERS WITHIN 3' OF THE FIXTURE CORNER AND TWO WIRES ON EACH LIGHT AND TWO SCREWS OR CLIPS PER STANDARD 52-2 OF THE UBC. VOL. 3.

VERTICAL SUPPORT IS TO BE PROVIDED BY 12 GA. WIRE 48" O.C. WITHIN 8' OF EACH WALL. HANGER WIRES TO BE WITHIN 1/6 OF PLUMB UNLESS COUNTER SLOPING WIRES ARE PROVIDED AS SHOWN ABOVE.

SEISMIC BRACING TO BE 12 GA. WIRE, 4 WIRES SECURED WITHIN 2' OF THE CROSS RUNNER INTERSECTION & SPLAYED 90° FROM EACH OTHER @ NOT MORE THAN 45° FROM THE CEILING PLANE SPACE @ 12'-0" O.C. & MIN. OF 48" FROM WALLS. PROVIDE SEISMIC STRUT @ 12'-0" O.C.

SUPPORT DETAIL

PER UBC 2504 & 710.2 (1997)

NO SCALE

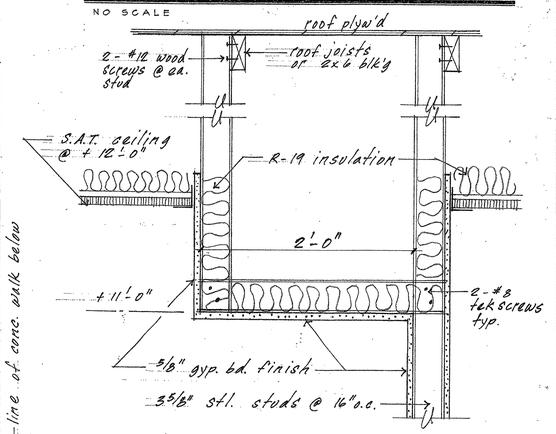

Soffit Detail 1

1/2" = 1'-0"

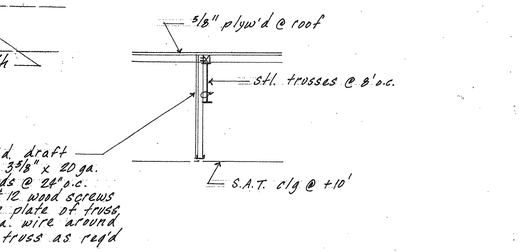

SYMBOLS

- 2' x 4' lay-in suspended grid acoustical tile ceiling system @+10'-0" unless otherwise noted
- 2' x 2' tegular acoustical tile ceiling system @+12'-0" unless otherwise noted
- 5/8" gyp. board taped, textured and painted o/metal studs @16" o.c. @+9'-0" unless otherwise noted. (use 3625157-33 @ 16" o.c. stl. studs w/ 2-#8 tek screws @ ea. end)
- 1' x 4' surface mounted fluorescant light fixture - see light schedule
- recessed incandesant light fixtures
- incandesant light fixtures - see light schedule
- 2' x 4' recessed flourescant light fixture - see light schedule
- mechanical supply air grille - see Mech. Plan
- mechanical return air grille - see Mech. Plan
- mechanical exhaust fans - see Mech. Plan

Note: All Suspended Acoustical Tile Ceilings are at + 10'-0" A.F.F. (U.O.N.) See Support Detail

"The Reflected Ceiling" Floor Plan

18,000 sq. ft. 1/8" = 1'-0"

Draft Stop

1/4" = 1'-0"

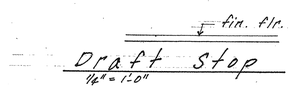

Revised 11-30-04
10-27-04

SJVAPCD OFFICE BUILDING

MODESTO, CA

Robert Hart, Architect
Architecture and Planning
Creative Residences
5608 Columbine Dr.
Modesto, CA 95356
(209) 578-3353

Sheet No. A-6 of Sheets

ACCESSIBILITY STANDARDS

INTERNATIONAL SYMBOL OF ACCESSIBILITY:

1. Symbol shall be white figure on blue background.
2. A surface identification at all handicapped parking stalls shall be 3' x 3' and shall be located so that it is visible to a traffic enforcement officer when a vehicle is properly parked.

PARKING NOTES

1. Handicapped space shall be as near as possible to the primary entrance of building.
2. Free standing signs located at interior end of a parking space shall be mounted a minimum 80" high if in path of travel.
3. Bumpers are required when no curb barrier is provided which will prevent encroachment of cars over walkways.
4. Wheelchair users must not be forced to go behind parked cars other than their own.
5. Each parking space is required to be at least 18' long.
6. Surface slopes of parking areas for the disabled should be minimal, but are required not to exceed 1/4 in/ft in any direction.

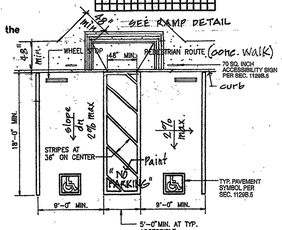

Total Parking in Lot	Required Minimum Number of Accessible Spaces
1 to 25	1 van accessible space
26 to 50	2 including 1 van accessible
51 to 75	3 including 1 van accessible
76 to 100	4 including 1 van accessible
101 to 150	5 including 1 van accessible
151 to 200	6 including 1 van accessible

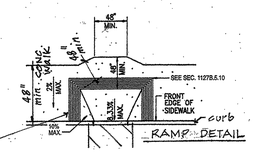

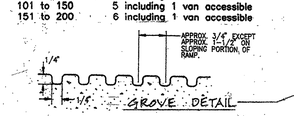

Except as provided below, access aisles adjacent to accessible spaces shall be 60 in. (1525mm) wide minimum.

One in every eight accessible spaces, but not less than one, shall be served by an access aisle 96 in. (2440mm) wide minimum and shall be designated "van accessible".

The vertical clearance at such spaces shall be a minimum of 8'-2" and may be grouped on one level of a parking structure.

Since a person with a disability, using a lift or ramp, must maneuver within the access aisle, the aisle cannot include a ramp or sloped area.

RESTROOM SIGNAGE

1. Characters and symbols are required to contrast with their background.
2. Symbols are to be centered on door 60" above floor and are to be distinctly different from the door in color and contrast.

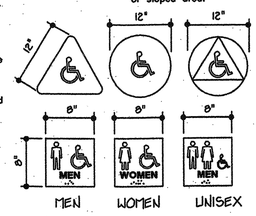

Provide raised letters and Braille lettering @ 60" high to latch side on the out side of door.
Raised lettering to be 5/8" to 2" high raised 1/32" sans serif, upper case, non-glare contrasting.
Braille to be grade 11, dots = 1/10" on center in each cell with 2/10" space between cells, raised 1/40".

TOILET DETAIL

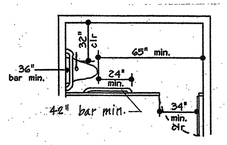

SIDE ENTRANCE

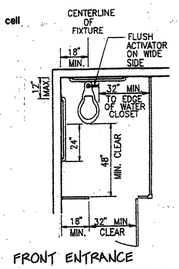

FRONT ENTRANCE

1. Equip the door into the stall with auto closing device and provide a clear opening width of 32" at the end of a stall or 34" at side of stall.
2. Provide 44" wide clear path to a stall and 48" space in front of a compartment door, measured at right angles to door.
3. In multiple accommodations, provide a space 60" in diameter and 27" high or 56" x 36" with 12" maximum intrusion by a door.
4. All accessible toilet compartment doors shall be equipped with a privacy lock with a loop or U-shaped handle immediately below the latch.

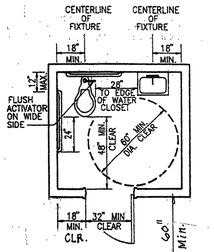

PRIVACY TOILET

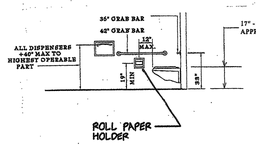

ELEVATION

SIGNAGE

1. Each parking space shall have a permanent (70 sq. in. min.) HANDICAPPED PARKING sign.
2. Free standing signs located at interior end of a parking space shall be mounted a minimum of 80" above finish grade.
3. Wall mounted signs may also be located at interior end of parking space and shall be mounted a minimum of 36" above finish grade.
4. Off-street parking facilities shall have a sign at each street entrance or at each parking stall not less than 17" x 22" in size, in 1" high letters, as follows:

"Unauthorized vehicles parked in designated handicapped spaces not displaying distinguishing placards or license plates issued for physically disabled persons may be towed away at the owner's expense. Towed vehicles may be recalimed at _____ or by telephoning _____".

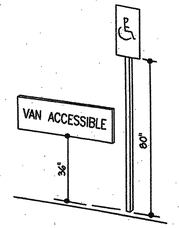

BUILDING ACCESS

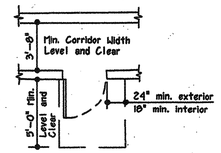

CORRIDOR DOORS

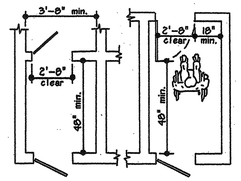

VESTIBULE DOORS

DOOR AND DOOR HARDWARE

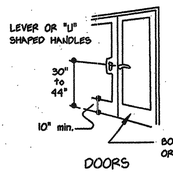

DOORS

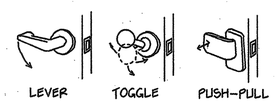

DOOR HARDWARE

DOOR OPENING EFFORTS:
Exterior Doors: 8.5 lbs
Interior Doors: 5 lbs
Firewall Doors: 15 lbs

LAVATORY NOTES

1. Provide a clear space 30" x 48" in front of lavatory. The clear space may extend into knee and toe space under lavatory.
2. Insulate or cover hot water and drain pipes under lavatories.
3. No sharp or abrasive surfaces are allowed under lavatories.
4. Faucet controls and operating mechanisms are required to be openable with one hand and cannot require grasping, pinching, or twisting of wrist. The force required to activate controls is not to exceed 5 lbs. Lever operated, push type and electronically controlled mechanisms are examples of acceptable design.
5. Self-closing valves are allowed if the faucet remains open for at least 10 seconds.
6. Top of lavatory shall be a maximum of 34" from finished floor.

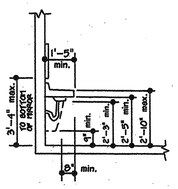

ELEVATION

URINAL DETAIL

1. Provide stall type or wall hung urinals with an elongated rim at 17" maximum height. Flush controls to be hand operated and are to meet same requirements as flush controls for toilets and are to be no more than 44" above floor.

The accessible wall hung urinal shall have an elongated rim at 14" minimum projection.

Where urinals are provided at least one shall have a clear space of 30" x 48" in front of urinal.

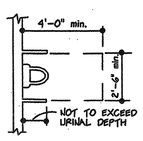

PLAN

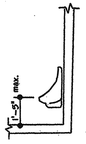

ELEVATION

THRESHOLDS

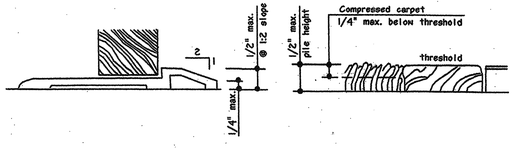

STAIRS AND HANDRAILS

1. Stair risers are uniform and 7" high maximum.
2. Stair treads are uniform and 11" deep minimum.
3. All treads shall be slip-resistant with a smooth, rounded edge.
4. Overall stair width shall be 44" minimum.
5. All handrails shall be 1-1/4" to 1-1/2", uninterrupted, does not rotate within its fittings, and all ends are returned or terminated safely.
6. Stair risers shall be sloped and/or underside of stair nosings shall have an angle of not less than 60 degrees from the horizontal.

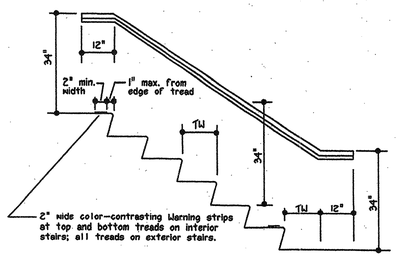

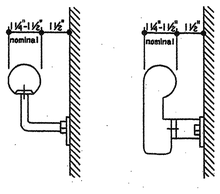

HANDRAILS

TOILET ACCESSORY DETAIL

1. Where towel, sanitary napkin and waste recepticales and similar despensing and disposal fixtures are provided, at least one of each type is to be located with all operable parts, including coin slots, within 40" from the floor.
2. Mount mirrors with bottom edge no more than 40" from floor.
3. Locate toilet tissue dispensers on wall within 12" of front edge of toilet seat.

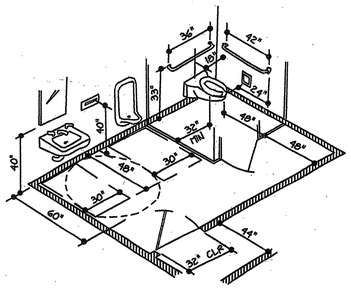

GRAB BAR DETAIL

1. Locate grab bars on each side or one side and the back of toilet, 33" above and parallel to floor. Bars at side to be 42" long with front end 24" in front of toilet. Bars in back to be 36" long. Diameter or width of gripping surface is required to be 1 1/4" to 1 1/2" of shape is to provide an equivalent gripping surface.
2. If grab bars are mounted adjacent to wall, the space between wall and bar is to be 1 1/2".
3. Grab bars shall not rotate.
4. Grab bars and any surface adjacent to them can not have any sharp or abrasive elements.
5. Grab bars and mountings shall withstand 250 lbs/side, 500 lbs total weight/middle.

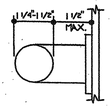

GRAB BAR

RAMP NOTES

1. Maximum allowable slope of a ramp is 1:12.
2. Landings are required at top and bottom of every ramp.
3. Pedestrian ramps serving primary entrances to buildings with an occupancy load of 300 or more will require 60" clear width: less than 300, width shall be 48".
4. Ramps with occupant load of less than 50 may be 36" wide. when serving Hotels, Apartment houses, Convents, Monasteries and Dwellings.
5. Intermediate landing will be required to be 60" long in the direction of travel.
6. If a ramp has a rise greater than 6" or horizontal projection greater than 72" then it shall have handrails on both sides.
7. Ramps with slopes of 1:16 or steeper will require slip resistant finish.

Note: Examples of ramp dimensions Are:

Slope	Max. Rise (inches)	Max. Horizontal Projection (feet)
1:12	30	30
1:15	30	37.5
1:16	30	40
1:20	30	50

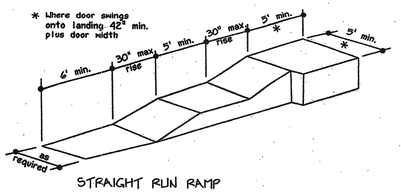

STRAIGHT RUN RAMP

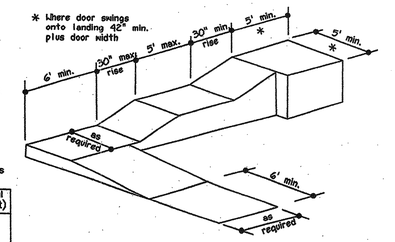

RAMP WITH TURNING PLATFORM

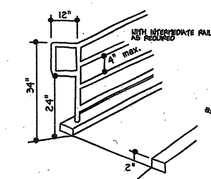

HANDRAILS

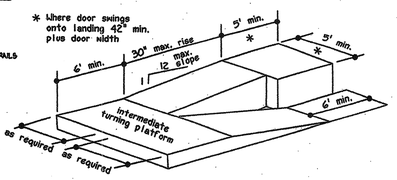

RAMP WITH INTERMEDIATE SWITCH-BACK PLATFORM

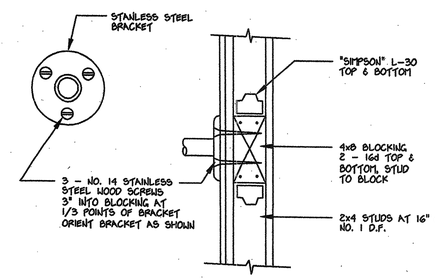

GRAB BAR AND HAND RAIL CONNECTION DETAIL

DRINKING FOUNTAINS

1. The drinking fountain shall be a minimum of 18" in depth and there shall be a clear and unobstructed knee space under the drinking fountain not less than 27" in height and 8" in depth, the depth measurement being taken from the front edge of the fountain. Additionally there shall be toe clearance of 9" in height above the floor, and 17" in depth from the front edge of the fountain. A side approach drinking fountain is not acceptable.
2. The bubbler shall be activated by a control which is easily operated by a handicapped person such as a hand-operated lever type control located within 6" of the front of fountain, a push bar control along the front of the drinking fountain, etc. The bubbler outlet orifice shall be located within 6" of the fromt of the drinking fountain and shall be within 36" of the floor. The water stream from the bubbler shall be substantially parallel to the front edge of the drinking fountain.
3. The drinking fountain shall be located completely within alcoves or so positioned as to not encroach into pedestrian ways.

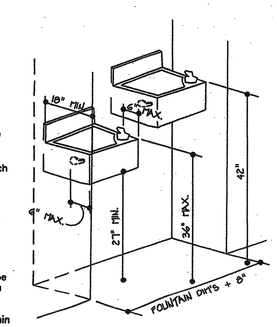

DRINKING FOUNTAIN ALCOVE

1133B.7 Walks and Sidewalks.

*1133B.7.1 **Continuous surface.** Walks and sidewalks subject to these regulations shall have a continuous common surface, not interrupted by steps or by abrupt changes in level exceeding 1/2 inch (12.7 mm) (see Section 1133B.7.3), and shall be a minimum of 48 inches (1219 mm) in width. Surfaces shall be slip-resistant as follows:*

*1133B.7.1.1 **Slopes less than 6 percent.** Surfaces with a slope of less than 6 percent gradient shall be at least as slip-resistant as that described as a medium salted finish.*

*1133B.7.1.2 **Slopes 6 percent or greater.** Surfaces with a slope of 6 percent gradient shall be slip-resistant.*

*1133B.7.1.3 **Surface cross slopes.** Surface cross slopes shall not exceed 1/4 inch (6 mm) per foot except when the enforcing agency finds that due to local conditions it creates an unreasonable hardship, the cross slope shall be increased to a maximum of 1/2 inch (12.7 mm) per foot for distances not to exceed 20 feet (6096 mm) (2.5% gradient).*

EXCEPTION: When, because of right-of-way restrictions, natural barriers or other existing conditions, the enforcing agency determines that compliance with the 48-inch (1219 mm) clear sidewalk width would create an unreasonable hardship, the clear width may be reduced to 36 inches (914 mm).

*1133B.7.2 **Gratings.** Walks, sidewalks and pedestrian ways shall be free of gratings whenever possible. For gratings located in the surface of any of these areas, grid openings in gratings shall be limited to 1/2 inch (12.7 mm) in the direction of traffic flow.*

EXCEPTIONS: 1. Where the enforcing agency determines that compliance with this section would create an unreasonable hardship, an exception may be granted when equivalent facilitation is provided.

2. This section shall not apply in those conditions where, due to legal or physical constraints, the site of the project will not allow compliance with these building standards or equivalent facilitation without creating an unreasonable hardship. See Section 101.17.11, Item 4.

*1133B.7.3 **Five percent gradient.** When the slope in the direction of travel of any walk exceeds 1 unit vertical to 20 units horizontal (5% gradient), it shall comply with the provisions of Section 1133B.5.*

*1133B.7.4 **Changes in level.** Abrupt changes in level along any accessible route shall not exceed 1/2 inch (12.7 mm). When changes in level do occur, they shall be beveled with a slope no greater than 1 unit vertical to 2 units horizontal (50%), except that level changes not exceeding 1/4 inch (6 mm) may be vertical.*

When changes in levels greater than 1/2 inch (12.7 mm) are necessary, they shall comply with the requirements for curb ramps.

NOTE: See Section 1127B.5.

*1133B.7.5 **Level areas.** Walks shall be provided with a level area not less than 60 inches by 60 inches (1524 mm by 1524 mm) at a door or gate that swings toward the walk, and not less than 48 inches wide by 64 inches (1219 mm by 1118 mm) deep at a door or gate that swings away from the walk. Such walks shall extend 24 inches (610 mm) to the side of the strike edge of a door or gate that swings toward the walk. (For example, see Figure 11B-26B.)*

*1133B.7.6 **Walks with continuous gradients.** All walks with continuous gradients shall have level areas at least 5 feet (1524 mm) in length at intervals of at least every 400 feet (121 920 mm).*

*1133B.8.3 **Detectable warnings at transit boarding platforms.** Transit boarding platforms shall have a detectable warning texture extending the full length of the loading area. This detectable warning texture shall have the following features:*

Width 24 to 36 inches (610 mm to 914 mm) placed at the edge of the drop-off or safe area.

Durable, slip-resistant material having a surface texture composed of raised, truncated domes in a staggered pattern with a diameter of nominal 0.9 inch (22.88 mm) at the base tapering to 0.45 inch (11.4 mm) at the top, a height of nominal 0.2 inch (5.08 mm), and a center-to-center spacing of nominal 2.35 inches (59.6 mm) in compliance with Figure 11B-23A. "Nominal" as used here shall be in accordance with California State Referenced Standards Code Section 12-11-102. The detectable warning shall contrast visually with adjoining surfaces, either light on dark or dark on light. The material used to provide contrast shall be an integral part of the walking surface. Warning surfaces shall differ from adjoining walking surfaces in resiliency or sound on cane contact. This surface shall be reserved for warning.

Color yellow conforming to Federal Color No. 33538, as shown in Table IV of Standard No. 595B. Where the color value contrast between the yellow warning and the main walking surface is less than 70 percent, a 1 inch-wide (25 mm) black strip shall separate the yellow warning from the main walking surface. Contrast shall be determined by:

Contrast = [(B1-B2/B1)] × 100 percent where B1 = light reflectance value (LRV) of the lighter area and B2 = light reflectance value (LRV) of the darker area.

*1133B.8.4 **Detectable directional texture at boarding platforms.** At transit boarding platforms, the pedestrian access shall be identified with a detectable directional texture. This detectable directional texture shall comply with Figure 11B-23B and shall be 0.1 inch (2.54 mm) in height that tapers off to 0.04 inch (1.02 mm), with bars raised 0.2 inch (5.08 mm) from the surface. The raised bars shall be 1.3 inches (33.02 mm) wide and 3 inches (76 mm) from center-to-center of each bar. This surface shall differ from adjoining walking surfaces in resiliency or sound on cane contact. The color of the directional texture shall comply with Section 1133B.8.3. This surface will be placed directly behind the yellow detectable warning texture specified in Section 1133B.8.3, aligning with all doors of the transit vehicles, where passengers will embark. The width of the directional texture shall be equal to the width of the transit vehicle's door opening. The depth of the texture shall not be less than 36 inches (914 mm).*

*1133B.8.5 **Detectable warnings at hazardous vehicular areas.** If a walk crosses or adjoins a vehicular way, and the walking surfaces are not separated by curbs, railings or other elements between the pedestrian areas and vehicular areas, the boundary between the areas shall be defined by a continuous detectable warning which is 36 inches (914 mm) wide, complying with Sections 1133B.8.3 through 1133B.8.5.*

rh
Robert Hart, Architect
Architecture and Planning
Creative Residences
3605 Columbine Dr.
Modesto, CA 95355
(209) 578-3355

Sheet No.
H-1
of Sheets

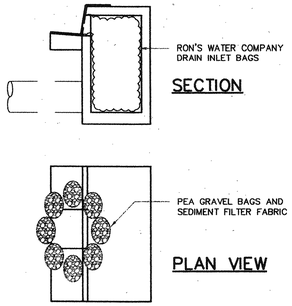

OFF-SITE CATCH BASIN

(3) TEMPORARY SEAL OPENING SEDIMENT PROTECTION

NOT TO SCALE

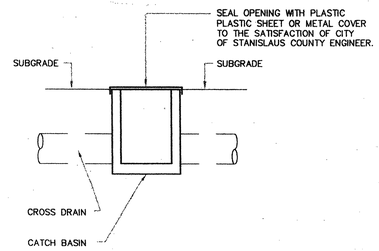

ON-SITE CATCH BASIN

(2) TEMPORARY SEAL OPENING SEDIMENT PROTECTION

NOT TO SCALE

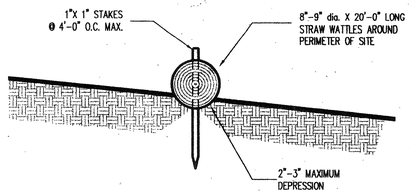

(4) EROSION CONTROL STRAW WATTLE PLACEMENT DETAIL

NOT TO SCALE

TEMPORARY STABILIZED CONSTRUCTION ENTRANCE

TEMPORARY STABILIZED CONSTRUCTION ENTRANCE
DESIGN AND CONSTRUCTION SPECIFICATIONS:

1. CONTRACTOR SHALL CONSTRUCT A STABILIZED CONSTRUCTION ENTRANCE AT THE ENTRANCE TO THE PROJECT SITE
2. THE THICKNESS FO THE PAD SHALL NOT BE LESS THAN 18 INCHES
3. THE WIDTH OF THE PAD SHALL NOT BE LESS THAN THE FULL WIDTH OF ALL POINTS OF INGRESS OR EGRESS.
4. THE LENGTH OF THE PAD SHALL BE AS REQUIRED, BUT NOT LESS THAN 100 FEET.
5. THE ENTRANCE SHALL BE MAINTAINED IN A CONDITION THAT WILL PREVENT TRACKING OR FLOWING OF SEDIMENT ONTO PUBLIC RIGHT-OF-WAY, THIS MAY REQUIRE PERIODIC TOP DRESSING WITH ADDITIONAL STONE AS CONDITIONS DEMAND, AND REPAIR AND/OR CLEAN OUT ANY MEASURES USED TO TRAP SEDIMENT ALL SEDIMENT SPILLED, DROPPED, WASHED OR TRACKED ONTO PUBLIC RIGHT-OF-WAY SHALL BE REMOVED IMMEDIATELY.
6. WHEN NECESSARY, WHEELS SHALL BE CLEANED TO REMOVE SEDIMENT PRIOR TO ENTRANCE ONTO PUBLIC RIGHT-OF-WAY, WHEN WASHING IS REQUIRED, IT SHALL BE DONE ON AN AREA STABILIZED WITH CRUSHED STONE THAT DRAINS INTO AN APPROVED SEDIMENT TRAP, OR SEDIMENT BASIN. ALL SEDIMENT SHALL BE PREVENTED FROM ENTERING ANY STORM DRAIN, DITCH, OR WATERCOURSE THROUGH USE OF SANDBAGS, GRAVEL, BOARDS, OR OTHER APPROVED METHODS.
7. CONTRACTOR TO REMOVE AND DISPOSE OF STABILIZED CONSTRUCTION ENTRANCE UPON COMPLETION OF CONSTRUCTION.

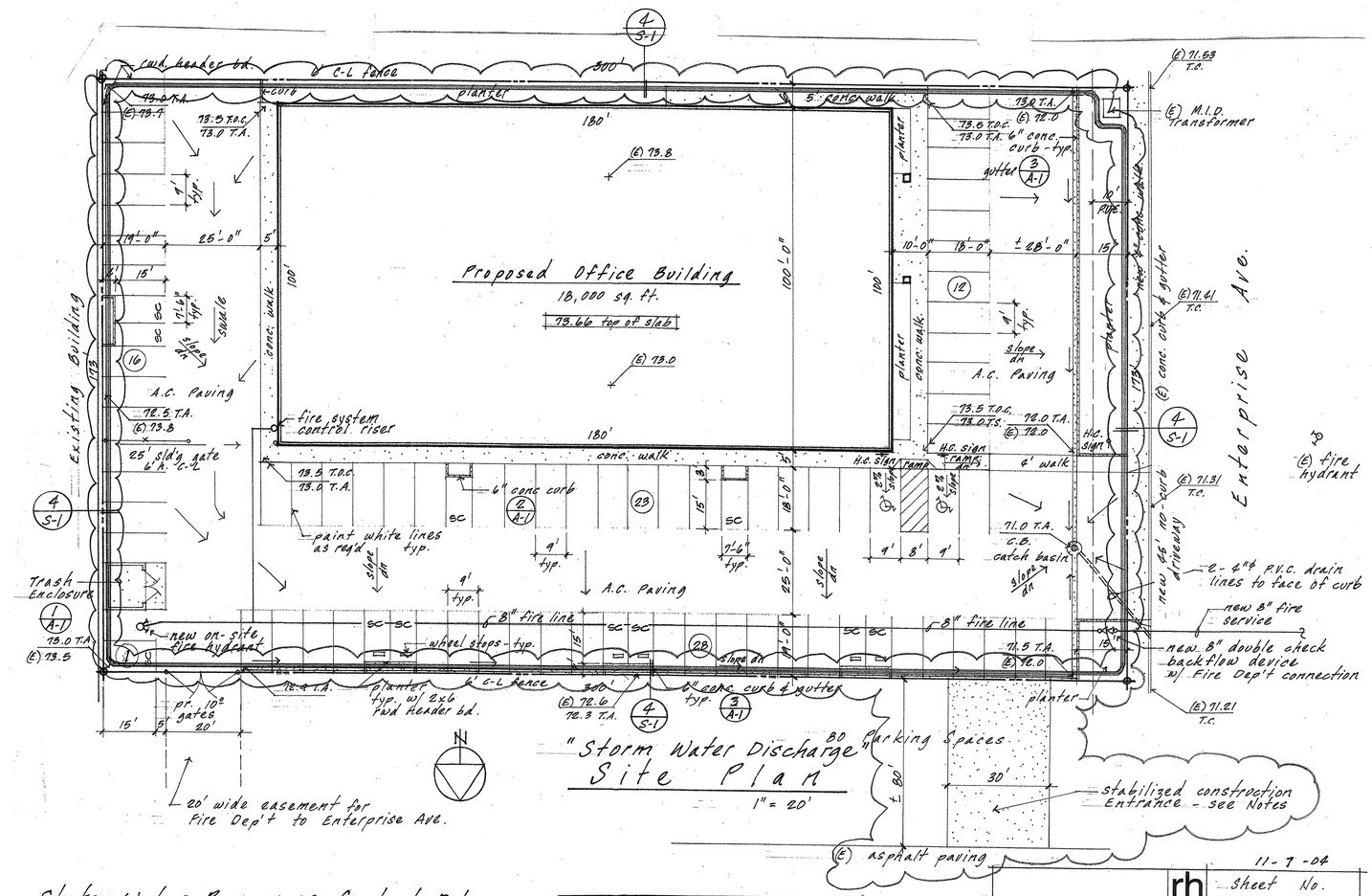

State Water Resources Control Bd.

SJVAPCD OFFICE BUILDING
MODESTO, CA

Robert Hart, Architect
Architecture and Planning
Creative Residences
3505 Columbine Dr.
Modesto, CA 95356
(209) 578-3353

11-7-04

Sheet No. S-1 of Sheets

8

TYPE	SHEATHING	ANCHOR BOLT	SHEATHING FASTENER	FSTNR SPACING EDGE	FSTNR SPACING FIELD	REMARKS
C	3/8" APA RATED SHTG 16/0 EXP 1, PLY OR OSB	1/2"φ AB @ 48" OC	8d COMMON NAILS	6" OC	12" OC	
D	3/8" APA RATED SHTG 16/0 EXP 1, PLY OR OSB	1/2"φ AB @ 24" OC	8d COMMON NAILS	4" OC	12" OC	3x MIN @ ADJ PANEL EDGES & FDN SILL ℙ's
E	3/8" APA RATED SHTG 16/0 EXP 1, PLY OR OSB	1/2"φ AB @ 16" OC	8d COMMON NAILS	3" OC	12" OC	3x MIN @ ADJ PANEL EDGES & FDN SILL ℙ's
F	3/8" APA RATED SHTG 16/0 EXP 1, PLY OR OSB	1/2"φ AB @ 16" OC	8d COMMON NAILS	2" OC	12" OC	3x MIN @ ADJ PANEL EDGES & FDN SILL ℙ's

NOTES:
1. INSTALL WALL SHTG PRIOR TO CONSTRUCTION OF POP-OUTS & ADJACENT WALLS.
2. BLOCK ALL PANEL EDGES.
3. ALL NAILS INTO PRESSURE TREATED SILL ℙ'S SHALL BE HOT DIPPED GALVANIZED.

24 SHEARWALL SCHEDULE

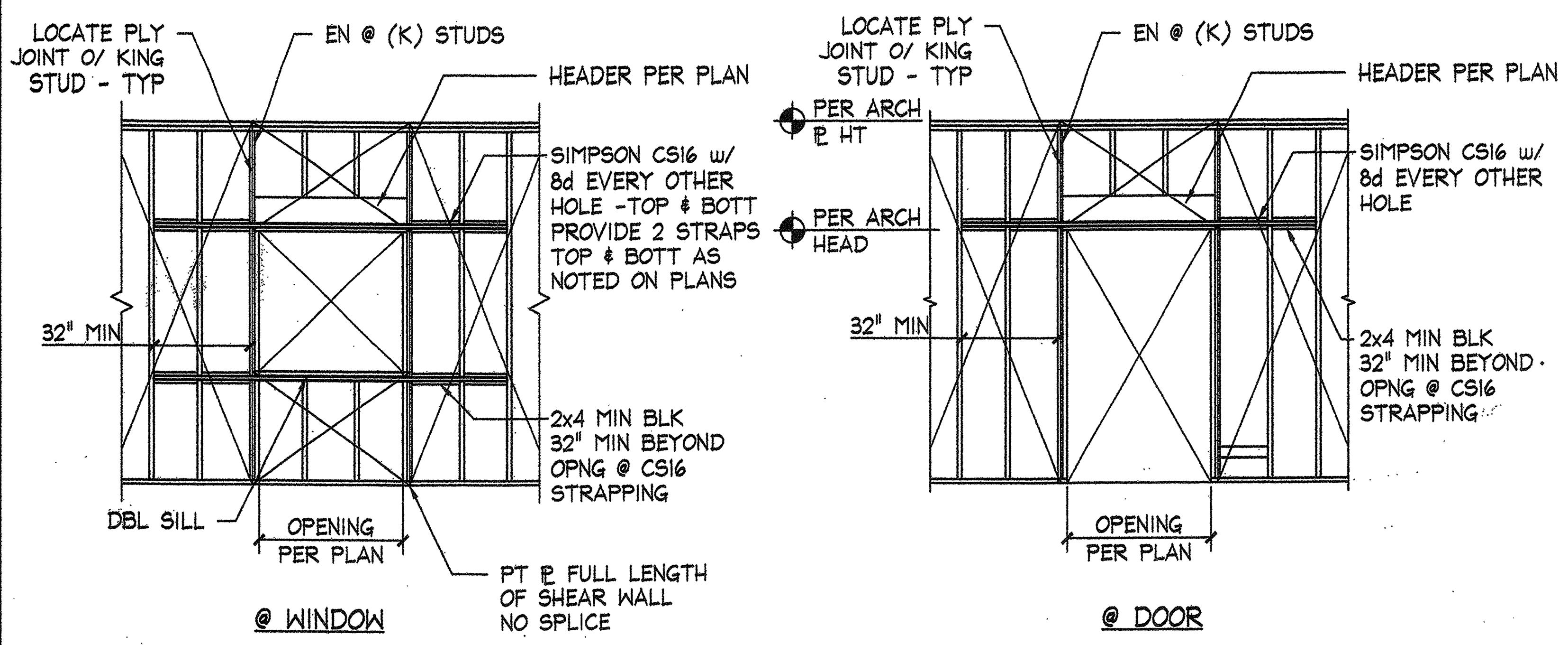

23 SPECIAL SHEAR WALL

NTS

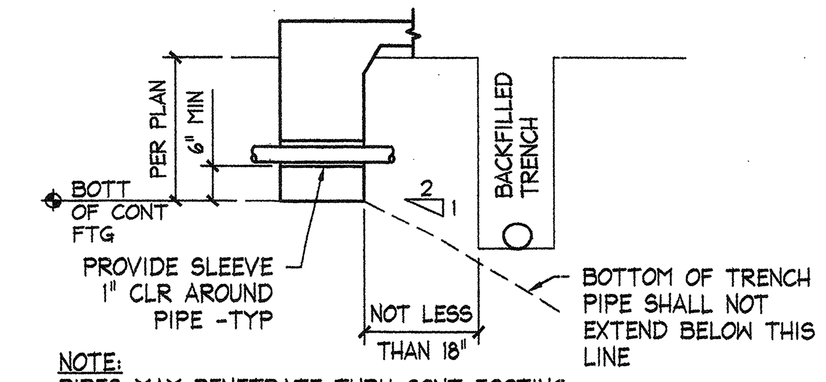

NOTE: PIPES MAY PENETRATE THRU CONT FOOTING, NOT THRU SPREAD FOOTINGS.

THRU CONT FTG
WHERE PIPE SLEEVE IS ≥ 6" ABV BOTT OF CONT FTG

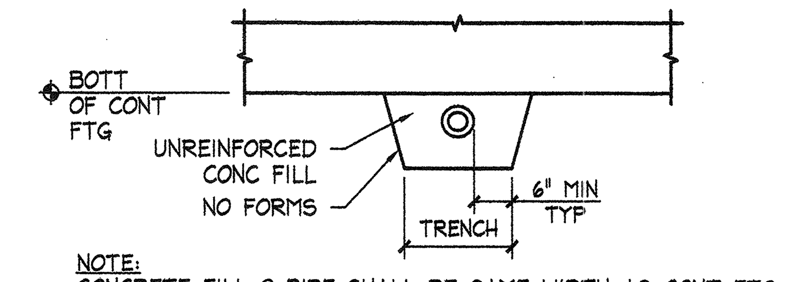

NOTE: CONCRETE FILL @ PIPE SHALL BE SAME WIDTH AS CONT FTG, FULL WIDTH OF TRENCH, & SHALL BE PLACED BEFORE CONT FTG IS POURED.

BELOW CONT FTG
WHERE PIPE SLEEVE IS ≥ 4" BELOW BOTT OF CONT FTG

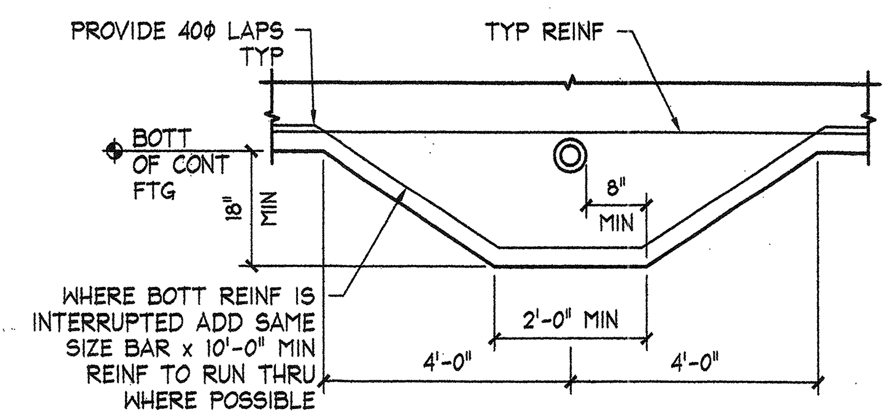

THRU CONT FTG
WHERE PIPE SLEEVE IS BETWEEN 6" ABV & 4" BELOW BOTT OF CONT FTG

11 PIPES & TRENCHES
@ CONT FTGS 1/2" = 1'-0"

BAR BEND DIAMETER "D"
D=6d, EXCEPT FOR STIRRUPS AND TIES, USE D=4d @ #3, #4, OR #5

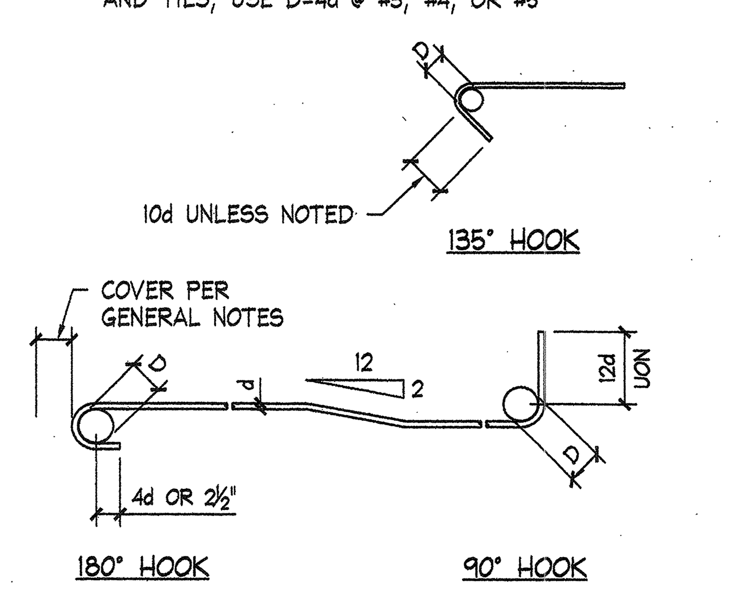

10 REINF BAR BENDS
3/4" = 1'-0"

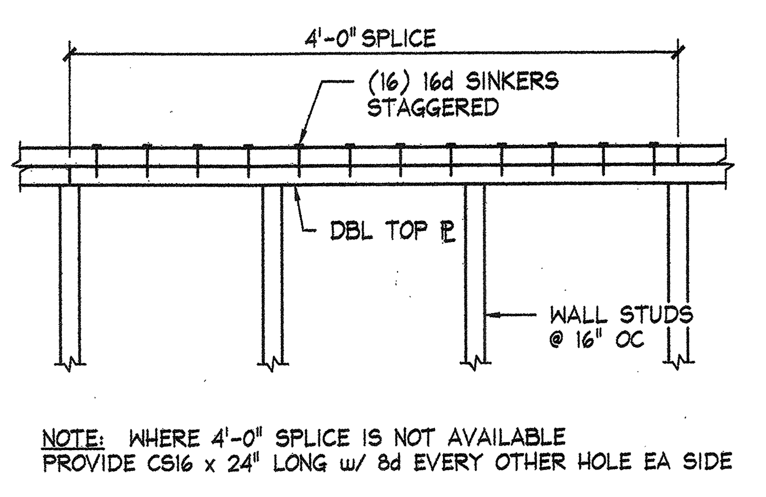

NOTE: WHERE 4'-0" SPLICE IS NOT AVAILABLE PROVIDE CS16 x 24" LONG w/ 8d EVERY OTHER HOLE EA SIDE

18 TOP PLATE SPLICE
1" = 1'-0"

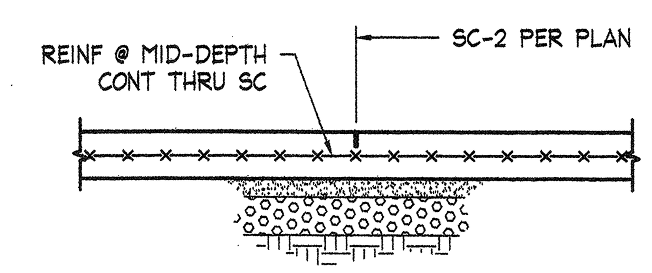

NOTE: SEE 13/S0.1 UON

14 SLAB ON GRADE
SOFT-CUT (SC-2) 3/4" = 1'-0"

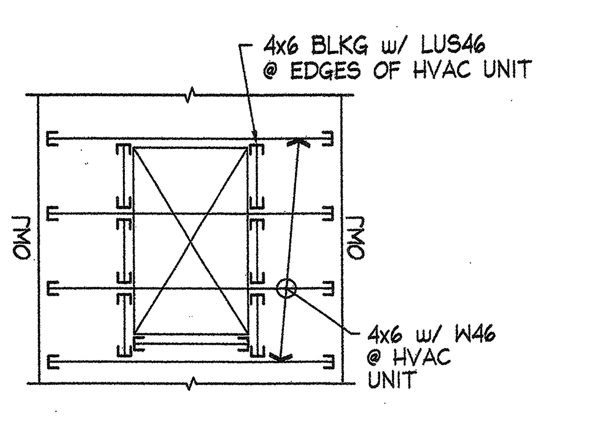

NOTE:
1. VERIFY LOC w/ MECH. LOCATE UNITS SUCH THAT LOADING TO EA OWJ IS 1500# MAX.

21 HVAC UNIT SUPPORT
1/4" = 1'-0"

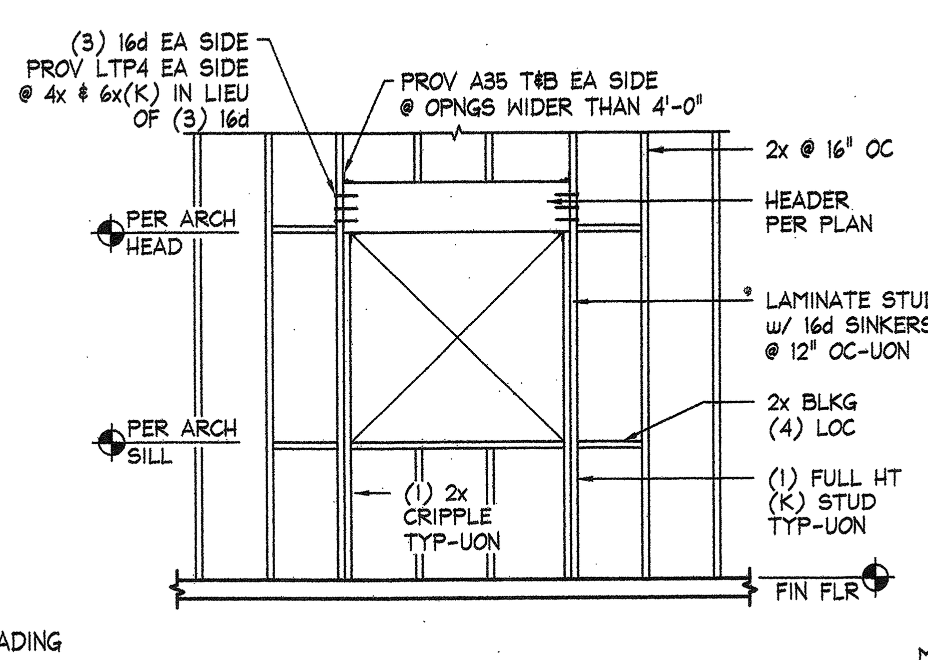

17 FRAMED OPENING
DOOR SIM 1/2" = 1'-0"

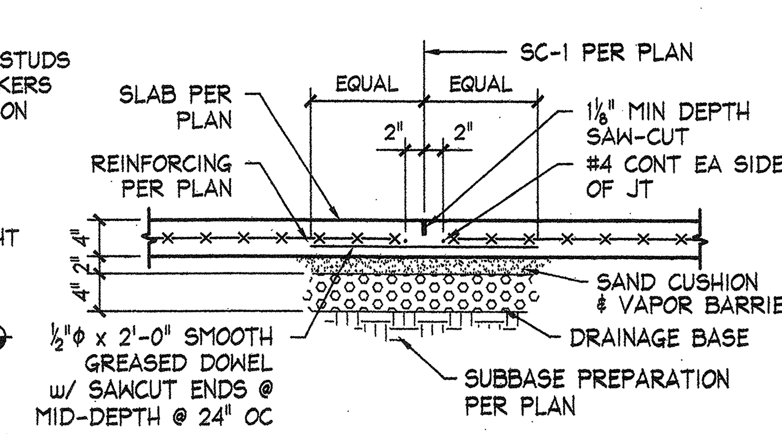

13 SLAB ON GRADE
SOFT-CUT (SC-1) 3/4" = 1'-0"

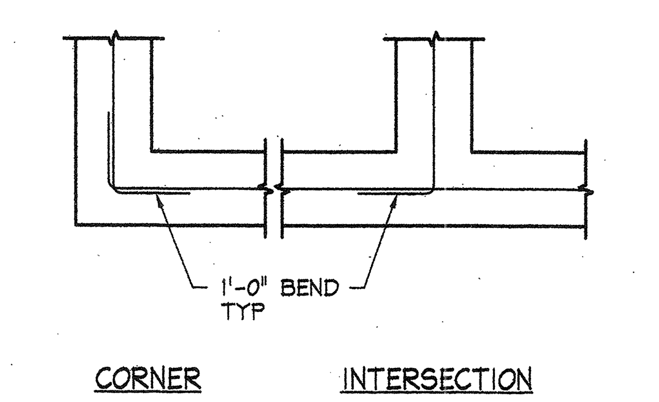

9 TYP FOOTING REINF
PLAN VIEW 1/2" = 1'-0"

1. GENERAL
A. THE STRUCTURAL DESIGN FOR THIS BUILDING IS IN ACCORDANCE WITH THE 2001 EDITION OF THE CALIFORNIA BUILDING CODE (CBC).
B. THE STRUCTURES HAVE BEEN DESIGNED FOR THE FOLLOWING LOADS:
1. ROOF LIVE LOAD - 20.0 PSF, REDUCIBLE PER CBC TABLE 16C, METHOD 1.
2. WIND: CBC 70 MPH BASIC WIND SPEED WITH EXPOSURE C AND 1.0 IMPORTANCE FACTOR.
3 SEISMIC: CBC ZONE 3 USING THE STATIC DESIGN PROCEDURE (1630.2.1), WITH Sd SOIL PROFILE TYPE, CA=.36, Cv=.54, & R=5.5 FOR PLYWOOD SHEAR WALLS.
C. FOUNDATIONS HAVE BEEN DESIGNED FOR MAXIMUM SOIL BEARING PRESSURES IN ACCORDANCE WITH CBC TABLE 18-I-A: TYPE 4 (SILTY SANDS, CLAYEY SANDS). FOOTINGS HAVE BEEN DESIGNED FOR 1,500 PSF.
D. IT IS THE RESPONSIBILITY OF THE CONTRACTOR TO PROVIDE ADEQUATE BRACING AND SUPPORT OF ALL TEMPORARY CONSTRUCTION AND PARTIALLY COMPLETED PORTIONS OF THE WORK. THE CONTRACTOR IS RESPONSIBLE FOR PROTECTION OF ADJACENT PAVED SURFACES, UTILITIES AND STRUCTURES.
E. THE WORK SHALL CONFORM TO THESE NOTES AND DRAWINGS. NO CHANGES SHALL BE ALLOWED WITHOUT WRITTEN AUTHORITY FROM THE ARCHITECT.

2. EARTHWORK
A. THESE NOTES APPLY TO STRIPPING OF AND REMOVAL OF VEGETATION AND DEBRIS; EXCAVATING; SCARIFYING; RECOMPACTION OF SOILS; GRADING OR FILLING TO SUB-BASE ELEVATION; FOUNDATION EXCAVATION AND BACK FILLING; AND PROVIDING AND COMPACTING DRAINAGE BASE UNDER SLABS ON GRADE WITHIN THE BUILDING LIMITS.
B. FILL SHALL BE APPROVED ON SITE NATIVE SANDY SOILS FREE OF ORGANIC MATERIAL OR SELECT GRANULAR IMPORT FILL.
C. PRIOR TO COMMENCING ANY EARTHWORK, STRIP THE AREA WITHIN THE BUILDING LIMITS TO REMOVE SURFACE OBSTRUCTIONS, VEGETATION, AND ORGANIC CONTAMINATED SOILS. VOIDS LEFT BY THE REMOVAL OF TREES AND THEIR ROOT SYSTEMS, IRRIGATION LINES, AND ANY OTHER BURIED OBJECTS SHOULD BE OVER-EXCAVATED AND RECOMPACTED.
D. AFTER STRIPPING OPERATIONS, SCARIFY EXPOSED SOILS TO A MINIMUM DEPTH OF 12" AND RECOMPACT TO A MINIMUM OF 90 PERCENT OF THE MAXIMUM DRY DENSITY AS DETERMINED BY THE ASTM D-1557 TEST PROCEDURE AT A MOISTURE CONTENT NEAR OPTIMUM.
E. GRADE AS REQUIRED TO SUB-GRADE. PLACE REQUIRED FILL IN 8" MAXIMUM OF LOOSE THICKNESS, DRY OR MOISTURE CONDITION AND COMPACT TO 90% RELATIVE DENSITY IN ACCORDANCE WITH 2.D. ABOVE.
F. AFTER GRADING, EXCAVATE FOR FOUNDATIONS. FILL FOOTING OVER-EXCAVATION WITH CONCRETE OR ENGINEERED FILL. ALL EXTERIOR FOOTINGS SHALL BEAR A MINIMUM OF 1'-0" BELOW GRADE AND NOT GREATER THAN THE SPECIFIED ELEVATION.
G. AFTER FOUNDATIONS ARE CONSTRUCTED, BACKFILL TO SUB-GRADE PER 2.E. ABOVE.
H. SLAB ON GRADE SHALL HAVE A 4 INCH THICK COMPACTED DRAINAGE BASE. DENSIFY DRAINAGE BASE WITH TWO RIGHT ANGLE PASSED WITH A VIBRATORY PLATE. DRAINAGE BASE SHALL BE GRADED TO REQUIRED ELEVATION, WITHIN A TOLERANCE OF +1/4" TO -1/2". AFTER DRAINAGE BASE IS COMPACTED, PLACE VAPOR BARRIER AND 2 INCHES OF SAND CUSHION.
I. ALL EXCAVATIONS AND APPROVED EARTHWORK SHALL BE PROTECTED FROM WEATHER AND WATER ACCUMULATION AT ALL TIMES.

3. CONCRETE
A. CONCRETE MIX DESIGNS:
1. SPREAD FOOTINGS AND CONTINUOUS FOOTINGS: 2,500 PSI 28 DAY COMPRESSIVE STRENGTH MADE WITH 1.5" ASTM C33 AGGREGATES (145 PCF MINIMUM DENSITY) AND CONTAIN MINIMUM OF 5.0 SACKS OF CEMENT PER CUBIC YARD AND PLACED AT A 5" MAXIMUM SLUMP.
2. INTERIOR SLABS ON GRADE AND EXTERIOR SLABS ON GRADE, CURBS, & GUTTERS: 2,500 PSI 28 DAY COMPRESSIVE STRENGTH MADE WITH 3/4" ASTM C33 AGGREGATES (145 PCF MINIMUM DENSITY) AND CONTAIN MINIMUM OF 5.0 SACKS OF CEMENT PER CUBIC YARD AND PLACED AT A 5" MAXIMUM SLUMP.
B. CEMENT SHALL BE ASTM C150, TYPE I. FLYASH NOT ALLOWED. 0
C. AGGREGATE SHALL CONFORM TO ASTM C33.
D. CONTRACTOR SHALL RETAIN A TESTING LABORATORY TO DESIGN AND TEST CONCRETE MIX DESIGNS. SUBMIT SEPARATE MIX DESIGNS IF CONCRETE IS TO BE PUMPED.
E. ALL CONCRETE SHALL BE READY-MIXED CONCRETE AND SHALL BE BATCHED, MIXED AND DELIVERED TO SITE PER ASTM C94. WATER SHALL BE ADDED ONLY TO OBTAIN MINIMUM SLUMP. PLACE CONCRETE WITHIN 90 MINUTES OF THE ADDITION OF MIXING WATER.
F. REINFORCEMENT SHALL BE ASTM A615, GRADE 60.
G. REINFORCEMENT SHALL BE FABRICATED WITH BENDS AND HOOKS CONFORMING TO ACI 315 AND AS SHOWN ON DRAWINGS. LAP ALL REINFORCING MINIMUM OF 40 BAR DIAMETERS (BUT NOT LESS THAN 12") UNLESS OTHERWISE NOTED.
H. REINFORCEMENT SHALL BE HELD SECURELY IN PLACE AND SUPPORTED ON GALVANIZED CHAIRS CONFORMING TO CRSI. WIRE TIE ALL INTERSECTIONS. CONCRETE DOBIES MAY BE USED TO SUPPORT REBAR CAST AGAINST EARTH.
I. MINIMUM CONCRETE COVER OVER REINFORCEMENT SHALL BE: 3" FOR CONCRETE CAST AGAINST EARTH, 2" FOR FORMED SURFACES EXPOSED TO EARTH OR WEATHER, AND 1" FOR FORMED SURFACES NOT EXPOSED TO WEATHER UNLESS OTHERWISE SHOWN.
J. ALL CONCRETE SHALL BE VIBRATED.
K. PROVIDE SLAB ON GRADE JOINTS PER DETAILS.
L. CHAMFER OR TOOL ALL EXPOSED EDGES 3/4".
M. PROVIDE HOT AND COLD WEATHER PROTECTION PER ACI 305 AND 306 RESPECTIVELY.
N. ALL CONCRETE SHALL BE WET CURED FOR 7 DAYS MINIMUM BY WET CURING OR WITH CURING COMPOUND. CURING COMPOUNDS TO BE COMPATIBLE WITH FLOOR FINISHES.

4. STRUCTURAL STEEL
A. ALL STEEL CONSTRUCTION SHALL BE DETAILED, FABRICATED, AND ERECTED IN ACCORDANCE WITH THE "SPECIFICATIONS FOR THE DESIGN, FABRICATION, AND ERECTION OF STRUCTURAL STEEL FOR BUILDINGS" AND THE "CODE OF STANDARD PRACTICE" OF AISC.
B. PLATES - ASTM A36; TUBES - ASTM A500, GRADE B; PIPES - ASTM A53, GRADE B; MACHINE BOLTS - ASTM A307; ANCHOR BOLTS - ASTM A307.
C. WELDING SHALL CONFORM TO AWS D1.1 AND BE DONE BY QUALIFIED WELDERS.
D. PRIME PAINTING OF STEEL NOT REQUIRED EXCEPT STEEL EXPOSED TO VIEW SHALL BE PRIME PAINTED.

5. OPEN WEB STEEL JOISTS.
A. OPEN WEB STEEL JOISTS AND JOIST GIRDERS ARE TO BE DESIGNED AND MANUFACTURED IN ACCORDANCE WITH SJI'S "RECOMMENDED CODE OF STANDARD PRACTICE OF STEEL JOISTS AND JOIST GIRDERS".
B. SEE DRAWINGS FOR LOADING CRITERIA.
C. DESIGN OF OPEN WEB JOISTS AND JOIST GIRDERS SHALL BE UNDER THE DIRECT SUPERVISION OF A CALIFORNIA REGISTERED CIVIL ENGINEER. SEALED AND WET SIGNED DESIGN CALCULATIONS AND DRAWINGS SHALL BE SUBMITTED PER PARAGRAPH 8 BELOW.
D. MANUFACTURER AND ERECTOR ARE RESPONSIBLE FOR BRIDGING, TEMPORARY BRACING, AND COORDINATING OF JOIST, JOIST GIRDERS, AND BRIDGING CONNECTIONS.

6. WOOD FRAMING
A. ALL FRAMING MEMBERS SHALL BE IDENTIFIED BY GRADE STAMP OF WEST COAST LUMBER INSPECTION BUREAU.
B. FRAMING MEMBERS TO BE DF NO. 2 WITH 19% MAXIMUM MOISTURE CONTENT, EXCEPT AS FOLLOWS:
1. 6X MEMBERS - D.F. NO. 1 WITH 19% MAXIMUM MOISTURE CONTENT.
C. PRESERVATIVE TREATED WOOD:
1. PRESERVATIVE TREATED WOOD SHALL BE USED ONLY WHERE SHOWN ON DRAWINGS AND SHALL NOT BE USED IN PLACE OF OTHER FRAMING UNLESS WRITTEN AUTHORIZATION FROM THE STRUCTURAL ENGINEER IS OBTAINED.
2. PRESERVATIVE TREATMENT SHALL BE EITHER ZINC BORATE OR DOT SODIUM BORATE.
3. NAILS USED TO FASTEN FRAMING AND CONNECTORS TO PRESERVATIVE TREATED WOOD SHALL BE HOT DIPPED GALVANIZED IN ACCORDANCE WITH ASTM A653, CLASS G90. NO SUBSTITUTIONS ALLOWED WITHOUT WRITTEN AUTHORIZATION FROM THE STRUCTURAL ENGINEER.
D. JOIST HANGERS AND FRAMING CONNECTORS - STANDARD ITEMS AS MANUFACTURED BY SIMPSON STRONG-TIE CO. (OR EQUAL), INSTALLED FOR FULL RATED LOAD VALUES.
E. MACHINE BOLTS - ASTM A307. PROVIDE WASHERS UNDER BOLT HEADS WHICH BEAR AGAINST WOOD.
F. ALL FRAMING MEMBERS ARE TO BE CUT FOR FULL BEARING AND PROPER LENGTH.
G. NAILING - PER CBC TABLE 23-II-B-1. ALL NAILS TO BE COMMON, EXCEPT 16d CAN BE BOX NAILS. NAILS @ PT SILL PLATES TO BE HOT DIPPED GALVANIZED. NAILING FOR JOIST HANGERS AND FRAMING CONNECTORS PER MANUFACTURER'S REQUIREMENTS FOR FULL RATED VALUES OR AS NOTED.
H. LAG BOLTS:
1. LAG BOLTS SHALL CONFORM TO ANSI/ASME STANDARD B18.2.1.
2. LEAD HOLES FOR LAG BOLT INSTALLATION:
A. CLEARANCE HOLE FOR THE SHANK SHALL HAVE THE SAME DIAMETER AS THE SHANK DIAMETER, AND THE SAME DEPTH OF PENETRATION AS THE LENGTH OF THE UNTHREADED SHANK.
B. LEAD HOLE FOR THE THREADED PORTION SHALL HAVE A DIAMETER EQUAL TO 60% TO 75% OF THE SHANK DIAMETER AND A LENGTH EQUAL TO AT LEAST THE LENGTH OF THE THREADED PORTION.
3. THE THREADED PORTION OF THE LAG BOLT SHALL BE INSERTED IN ITS LEAD HOLE BY TURNING WITH A WRENCH, NOT BY DRIVING WITH HAMMER.
4. SOAP OF OTHER LUBRICANT SHALL BE USED ON THE LAG BOLTS OF IN THE LEAD HOLES TO FACILITATE INSERTION AND PREVENT DAMAGE TO THE LAG SCREW.
I. PSL BEAMS SHALL BE AS MANUFACTURED BY TRUSS JOIST/MACMILLAN IN ACCORDANCE WITH ICBO REPORT NO. ER-4979.
J. PLYWOOD:
1. ROOFS NOTED "PANELIZED" - SHALL BE 5/8" APA RATED SHEATHING, 40/20 PANEL INDEX, EXPOSURE 1. NAIL EDGES WITH 10d COMMONS @ 6" O.C. AND FIELD @ 12" o.c. UNLESS OTHERWISE NOTED. INSTALL SHEETS WITH FACE GRAIN PARALLEL TO SUPPORTS.
2. ROOFS NOT NOTED "PANELIZED" - SHALL BE 5/8" APA RATED SHEATHING, 32/16 PANEL INDEX, EXPOSURE 1. NAIL EDGES WITH 10d COMMONS @ 6" O.C. AND FIELD @ 12" o.c.. INSTALL SHEETS WITH FACE GRAIN PERPENDICULAR TO SUPPORTS.
3. SHEAR WALL SHEATHING SHALL BE 3/8" APA RATED SHEATHING OR OSB, 16/0 PANEL INDEX, EXPOSURE 1, NAILED IN ACCORDANCE WITH SHEAR WALL SCHEDULE.
4. FASCIA AND SOFFIT SHEATHING - SHALL BE 1/2" APA RATED SHEATHING, 24/0 PANEL INDEX, EXPOSURE 1. NAIL EDGES WITH 8d COMMONS @ 6" O.C. AND FIELD @ 12" O.C.
K. METAL PLATE WOOD TRUSSES:
1. A COMPLETE SHOP DRAWING SUBMITTAL SHALL BE MADE TO ARCHITECT, ENGINEER OF RECORD, & BUILDING DEPARTMENT FOR REVIEW PRIOR TO FABRICATION. CALCULATIONS SHALL BE SEALED BY A CIVIL ENGINEER LICENSED IN THE STATE OF CALIFORNIA.
2. ARCHITECT OR ENGINEER OF RECORD SHALL PROVIDE LETTER STATING TRUSS SUBMITTAL HAS BEEN REVIEWED AND FOUND TO BE IN GENERAL CONFORMANCE WITH THE BLDG DESIGN.
3. TRUSS CALCULATIONS & LAYOUT SHALL BECOME PART OF THE CONSTRUCTION DOCUMENTS & SHALL BE KEPT AT THE JOB SITE.
4. MATERIALS, DESIGN, FABRICATION, & ERECTION SHALL CONFORM TO DESIGN SPECIFICATIONS FOR LIGHT METAL PLATE CONNECTED WOOD TRUSSES (TPI) LATEST EDITION & THE 2001 EDITION OF THE CBC & ANY OTHER APPLICABLE LOCAL CODES.
5. TRUSSES SHALL BE FABRICATED IN A SHOP LICENSED PER CBC SECTION 2321.3.
6. EACH TRUSS SHALL BE LEGIBLY MARKED WITH THE FOLLOWING INFORMATION WITHIN 2 FT. OF THE CENTER OF THE SPAN ON THE FACE OF THE BOTTOM CHORD:
a. IDENTITY OF THE COMPANY MANUFACTURING THE TRUSS
b. THE DESIGN LOAD
c. THE SPACING OF THE TRUSSES
7. WOOD USED TO FABRICATE TRUSSES SHALL HAVE A 19% MAX MOISTURE CONTENT
8. ALL ROOF TRUSSES SHALL BE SPACED @ 24" OC AND SHALL INCLUDE EXTENSIONS AS SHOWN.

7. INSPECTIONS
A. STRUCTURAL OBSERVATIONS IN ACCORDANCE WITH CBC SECTION 1702 SHALL BE PROVIDED BY STRUCTURAL ENGINEER OF RECORD. CONTRACTOR SHALL NOTIFY THE STRUCTURAL ENGINEER:
1. 48 HOURS IN ADVANCE OF PLACING CONCRETE FOR FOUNDATIONS.
2. AT COMPLETION OF STEEL FRAMING.
3. AT THE COMPLETION OF WOOD FRAMING PRIOR TO INSTALLING ROOFING OR WALL FINISHES.
B. EARTHWORK - PRIOR TO THE COUNTY'S FOUNDATION INSPECTION, PROVIDE THE BUILDING DEPARTMENT WITH COPIES OF COMPACTION/SOIL ANALYSIS REPORTS.
C. CONCRETE - CONTINUOUS AND SPREAD FOOTINGS AND SLAB ON GRADE - SPECIAL INSPECTION NOT REQUIRED. EXCEPTION 2 OF CBC 1705.5.1 APPLIES.
D. WELDING SHALL HAVE SPECIAL INSPECTION IN ACCORDANCE WITH CBC 1701.5.5.1. WELDING IN AN APPROVED FABRICATOR'S SHOP IN ACCORDANCE WITH CBC 1701.7 MAY NOT REQUIRE SPECIAL INSPECTION. PERIODIC INSPECTIONS SHALL BE IN ACCORDANCE WITH CBC 1701.6.2.

8. DEFERRED SUBMITTALS - THE FOLLOWING ARE DEFERRED SUBMITTALS. OBTAIN ENGINEER OF RECORD'S REVIEW AND APPROVAL PRIOR TO SUBMITTAL FOR BUILDING OFFICIAL APPROVAL IN ACCORDANCE WITH CBC SECTION 106.3.4.2 PRIOR TO DELIVERY TO JOB SITE.
A. OPEN WEB STEEL JOISTS.
B. METAL PLATE WOOD TRUSSES

5 GENERAL NOTES

jh lawder, inc.
structural engineers
717 16th Street, Ste. 4, Modesto, CA 95354
(209) 521-1143 Fax: (209) 521-1166

REGISTERED PROFESSIONAL ENGINEER
MICHELLE M. FUENTES
No. 4031
Exp. 6-30-08
STRUCTURAL
STATE OF CALIFORNIA

acme Construction Company, Inc.
1565 Cummins Drive • P.O. Box 4710 • Modesto, CA 95352
(209) 523-2674 • FAX: (209) 523-0213

GENERAL NOTES & TYPICAL DETAILS

SJVAPCD OFFICE BUILDING
MODESTO, CA

REVISIONS	BY
1 12/01/04 PC	pl

DATE: 10/28/04
FILE: 04-043
DR. BY: pl
SHEET: S0.1
OF SHEETS

12/2/2004 8:55:36 AM, jh lawder, inc., structural engineers

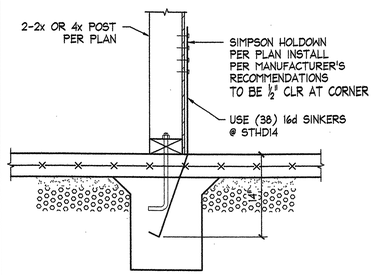

NOTE: SEE 20/S2.1 UON

24 TYP HOLDOWN
STHD14 1" = 1'-0"

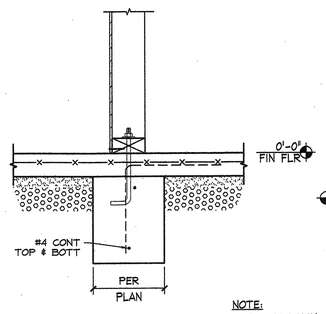

NOTE: SEE 16/S2.1 UON

20 INTERIOR FOOTING
1" = 1'-0"

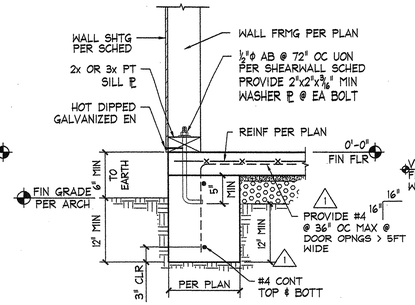

16 PERIMETER FOOTING
1" = 1'-0"

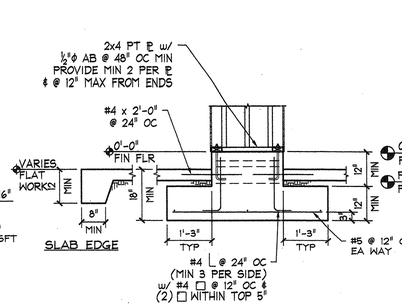

12 PIER FOOTING
1/2" = 1'-0"

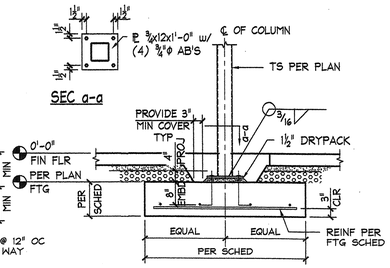

8 FOOTING DETAIL
@ TS COL 1/2" = 1'-0"

MARK	SIZE	REINF
A	4'-6" SQ x 12" DP	(4) #5 x 4'-0" EA WAY
B	5'-6" SQ x 12" DP	(5) #5 x 5'-0" EA WAY
C	6'-6" SQ x 12" DP	(6) #5 x 6'-0" EA WAY

4 FOOTING SCHEDULE

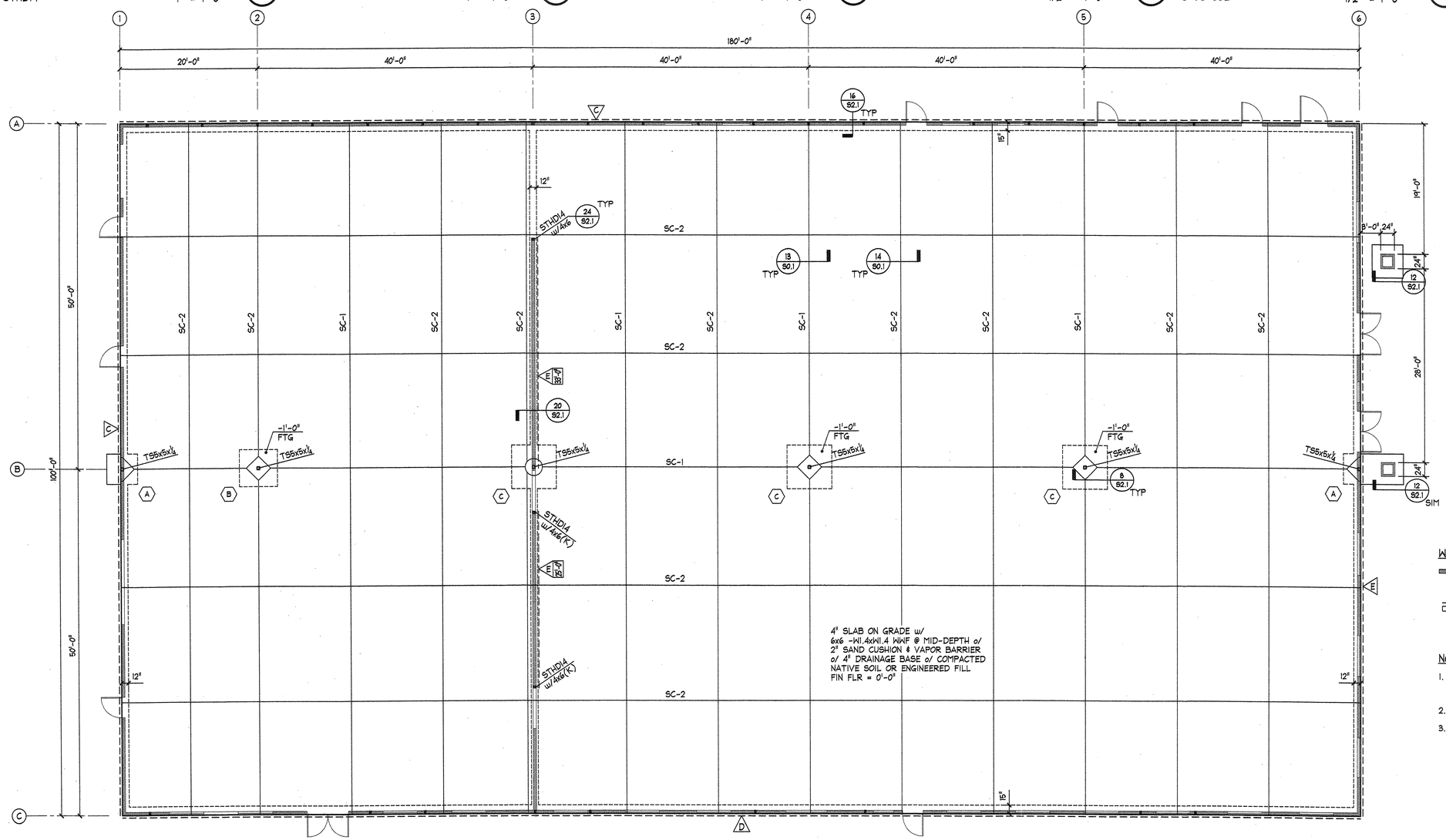

WALL LEGEND:

2x6 DF#2 @ 16" OC.

SHEARWALL MARK. SEE 24/S0.1 FOR SHEARWALL SCHEDULE. TERMINATE SHEATHING @ OPENING & PROVIDE EDGE NAILING @ KING STUD.

NOTES:

1. -1'-0" FTG DENOTES TOP OF FOOTING ELEVATION BELOW FLOOR SLAB. DATUM 0'-0" IS 1st FLOOR SLAB ON GRADE. FTG @ -1'-0" UON.
2. STEEL COLUMNS ARE ONE PIECE, FULL HEIGHT.
3. (C) SEE FTG SCHEDULE 4/S2.1

21 FOUNDATION PLAN
1/8 = 1'-0"

jh lawder, inc. structural engineers
717 16th Street, Ste. 4, Modesto, CA 95354
(209) 521-1143 Fax: (209) 521-1166

REGISTERED PROFESSIONAL ENGINEER MARCUS M. PEDERSEN No. 4931 Exp. 6-30-05 STRUCTURAL STATE OF CALIFORNIA

Acme Construction Company, Inc.
1565 Cummins Drive • P.O. Box 4710 • Modesto, CA 95352
(209) 523-2874 • FAX: (209) 523-0213

FOUNDATION PLAN

SJVAPCD OFFICE BUILDING
MODESTO, CA

REVISIONS	BY
1 12/01/04 PC	pl

DATE: 10/28/04
FILE: 04-043
DR. BY: pl
SHEET: S2.1
OF SHEETS

12/2/2004 8:58:23 AM, jh lawder, inc., structural engineers

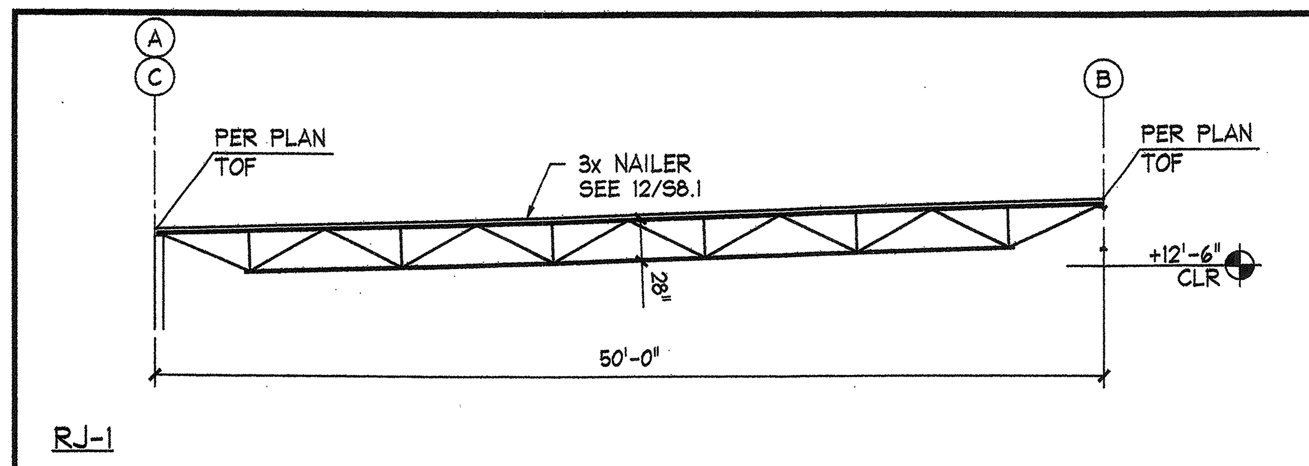

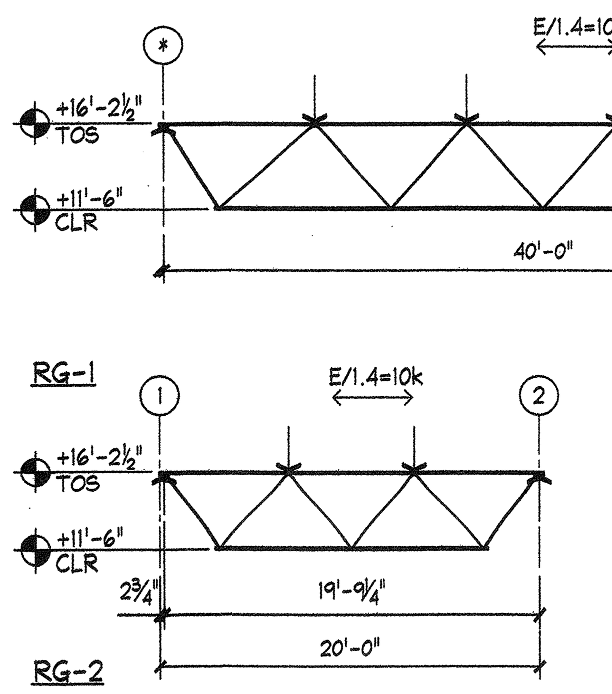

NOTES:

1. DESIGN LOADS: DL=16psf, LL=20psf, REDUCIBLE, WIND: 2001 CBC 70 MPH, EXP C (DL INCLUDES 3psf FOR WT OF OWJ)
2. DESIGN FOR 1500# POINT LOAD APPLIED AT ANY TOP CHORD PANEL PT ALONG TRUSS FOR FUTURE MECHANICAL UNITS.
3. "E/1.4=10k" DENOTES THOP CHORD AXIAL LATERAL DESIGN LOADS. DESIGN FOR E/1.4=5.0k UON.
4. DEFLECTION CRITERIA: LL - SPAN/240, DL + LL - SPAN/180
5. DESIGN LOAD COMBINATION - IN ACCORDANCE w/ CBC SECTION 1612.3

(24) TRUSS DESIGN CRITERIA

STEEL OWJ — 1/8" = 1'-0"

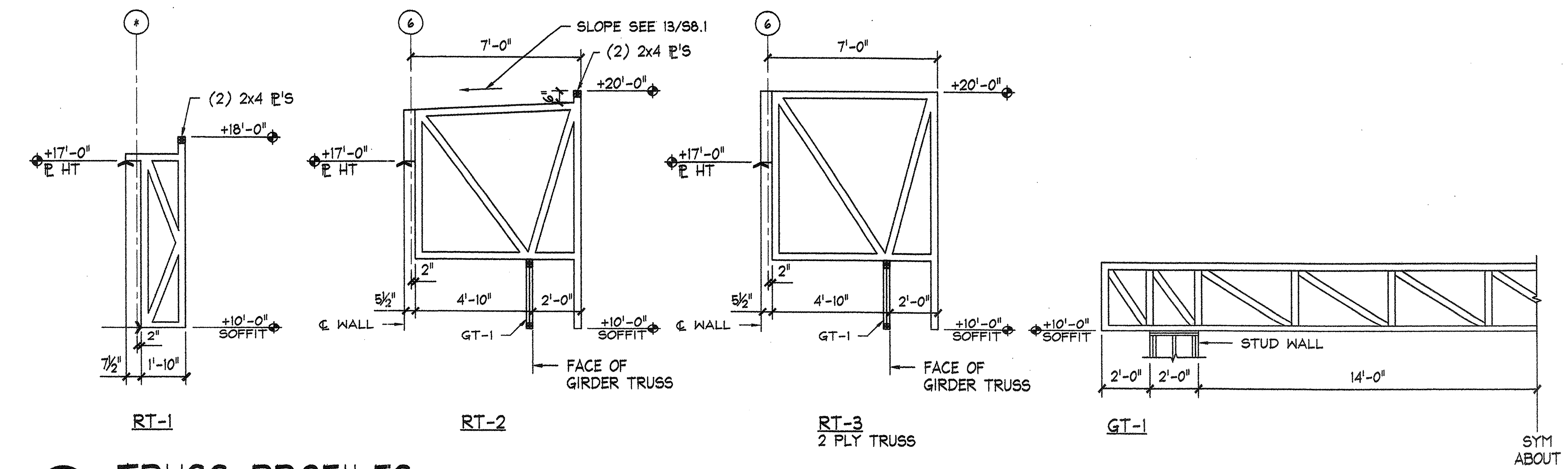

(12) TRUSS PROFILES

METAL PLATED WOOD TRUSSES — 1/8" = 1'-0"

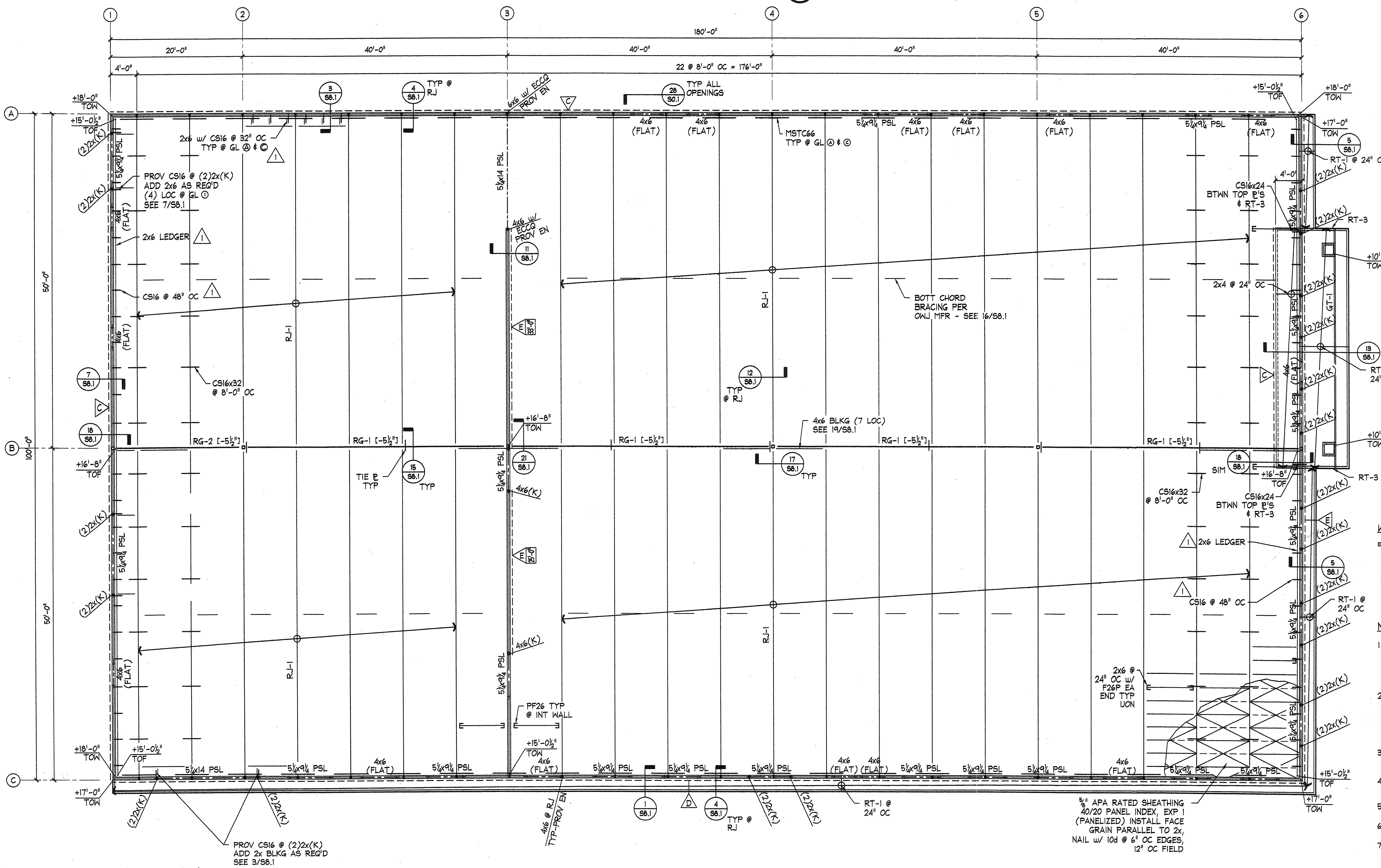

WALL LEGEND:

- 2x6 DF#2 @ 16" OC.
- SHEARWALL MARK. SEE 24/S0.1 FOR SHEARWALL SCHEDULE. TERMINATE SHEATHING @ OPENING & PROVIDE EDGE NAILING @ KING STUD.

NOTES:

1. EXTERIOR WALLS NOT NOTED AS SHEARWALLS SHALL HAVE ⅜" SHEATHING, NAIL w/ 8d COMMON @ 6" OC EDGES, 12" OC FIELD (BLKG NOT REQ'D)
2. ELEVATIONS NOTED √TOF ARE TO THE UNDERSIDE OF PLYWOOD FROM FINISH FLOOR SLAB. TOP OF FRAMING ELEVATIONS SHALL BE SET TO CONFORM TO INDICATED UNDERSIDE OF PLYWOOD ELEVATION.
3. ELEVATIONS NOTED √TOW ARE TO TOP OF WALL IN REFERENCE TO FINISH FLOOR SLAB.
4. [-5½"] DENOTES TOP OF STEEL OWJ FROM TOF ELEVATIONS.
5. FOR TYP FRMG @ WALL OPNGS, SEE 17/S0.1
6. FOR TYP SPLICES IN WALL TO ℄'S, SEE 18/S0.1
7. FOR FRMG @ ROOF TOP MECH UNITS, SEE 21/S0.1

(21) ROOF FRAMING PLAN

1/8" = 1'-0"

jh lawder, inc.
structural engineers
717 16th Street, Ste. 4, Modesto, CA 95354
(209) 521-1143 Fax (209) 521-1166

REGISTERED PROFESSIONAL ENGINEER — MICHELLE M. FLEMING — No. 4693 — Exp. 6-30-06 — STRUCTURAL — STATE OF CALIFORNIA

Bemo Construction Company, Inc.
1565 Cummins Drive • P.O. Box 4710 • Modesto, CA 95352
(209) 523-2674 • FAX: (209) 523-0213

ROOF FRAMING PLAN

SJVAPCD OFFICE BUILDING

MODESTO, CA

REVISIONS	BY
1 12/01/04 PC	pl

DATE: 10/28/04
FILE: 04-043
DR. BY: pl
SHEET: S2.2

12/2/2004 9:00:11 AM, jh lawder, inc., structural engineers

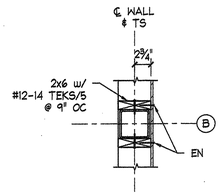

20 DETAIL
1" = 1'-0"

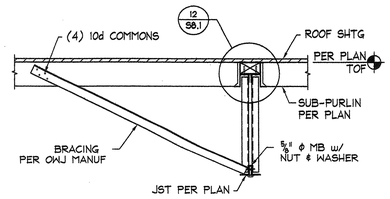

16 JOIST BRACE DETAIL
3/4" = 1'-0"

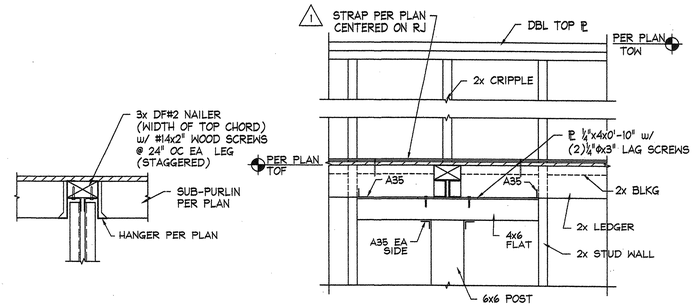

12 NAILER ATTACHMENT
@ ROOF JOIST
3/4" = 1'-0"

8 DETAIL
1" = 1'-0"

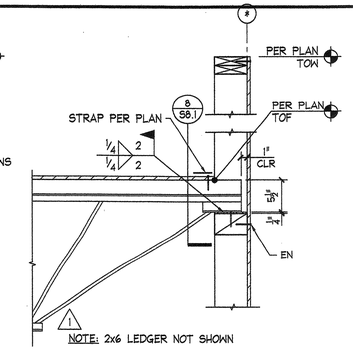

4 JOIST @ WALL
1" = 1'-0"

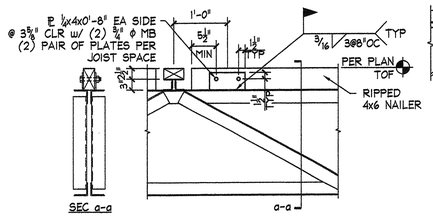

19 NAILER ATTACHMENT
@ TRUSS GIRDER
3/4" = 1'-0"

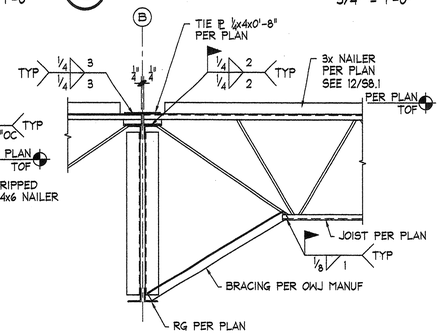

15 JOIST TO GIRDER
3/4" = 1'-0"

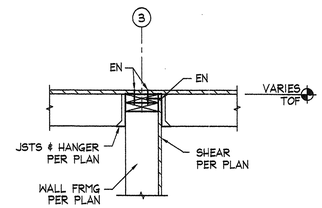

11 DETAIL
1" = 1'-0"

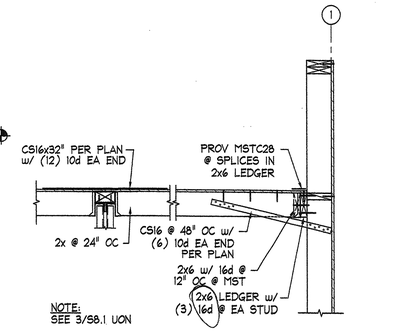

7 WALL SECTION
3/4" = 1'-0"

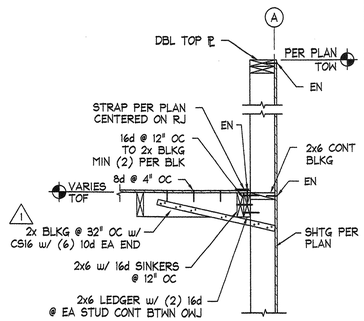

3 WALL SECTION
3/4" = 1'-0"

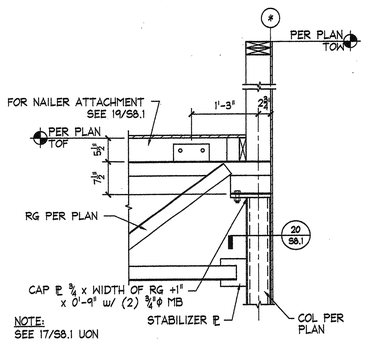

18 GIRDER TO COLUMN
3/4" = 1'-0"

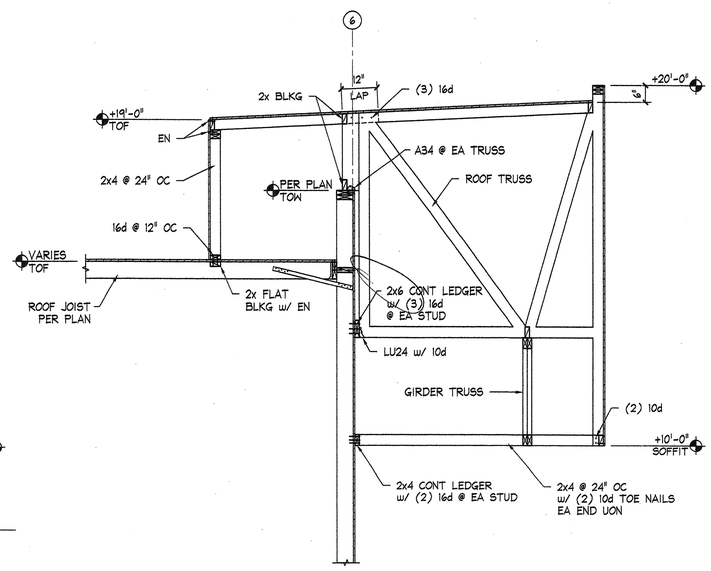

13 FRAMING DETAIL
1/2" = 1'-0"

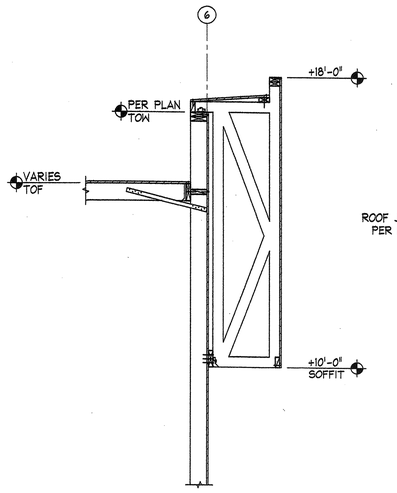

NOTE:
SEE 1/S8.1 & 7/S8.1 UON

5 FRAMING DETAIL
1/2" = 1'-0"

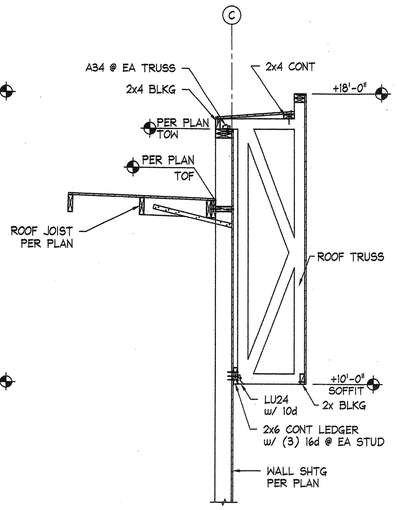

NOTE:
SEE 3/S8.1 UON

1 FRAMING DETAIL
1/2" = 1'-0"

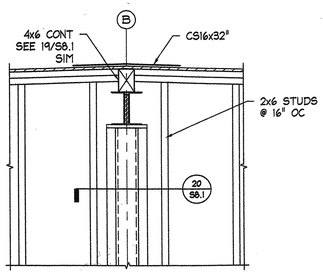

21 GIRDER TO COLUMN
3/4" = 1'-0"

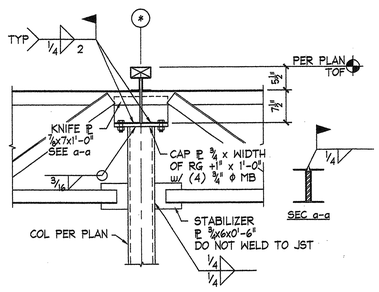

17 GIRDER TO COLUMN
3/4" = 1'-0"

jh lawder, inc.
structural engineers
717 16th Street, Ste. 4, Modesto, CA 95354
(209) 521-1143 Fax: (209) 521-1166

REGISTERED PROFESSIONAL ENGINEER
MICHELLE M. REYES
No. 4931
Exp.: 6-30-08
STRUCTURAL
STATE OF CALIFORNIA

Some Construction Company, Inc.
1565 Cummins Drive • P.O. Box 4710 • Modesto, CA 95352
(209) 523-2674 • FAX: (209) 523-0213

STRUCTURAL DETAILS

SJVAPCD OFFICE BUILDING
MODESTO, CA

REVISIONS	BY
1 12/01/04 PC	pl

DATE: 10/28/04
FILE: 04-043
DR. BY: pl
SHEET: S8.1
OF SHEETS

12/2/2004 9:11:22 AM, jh lawder, inc., structural engineers

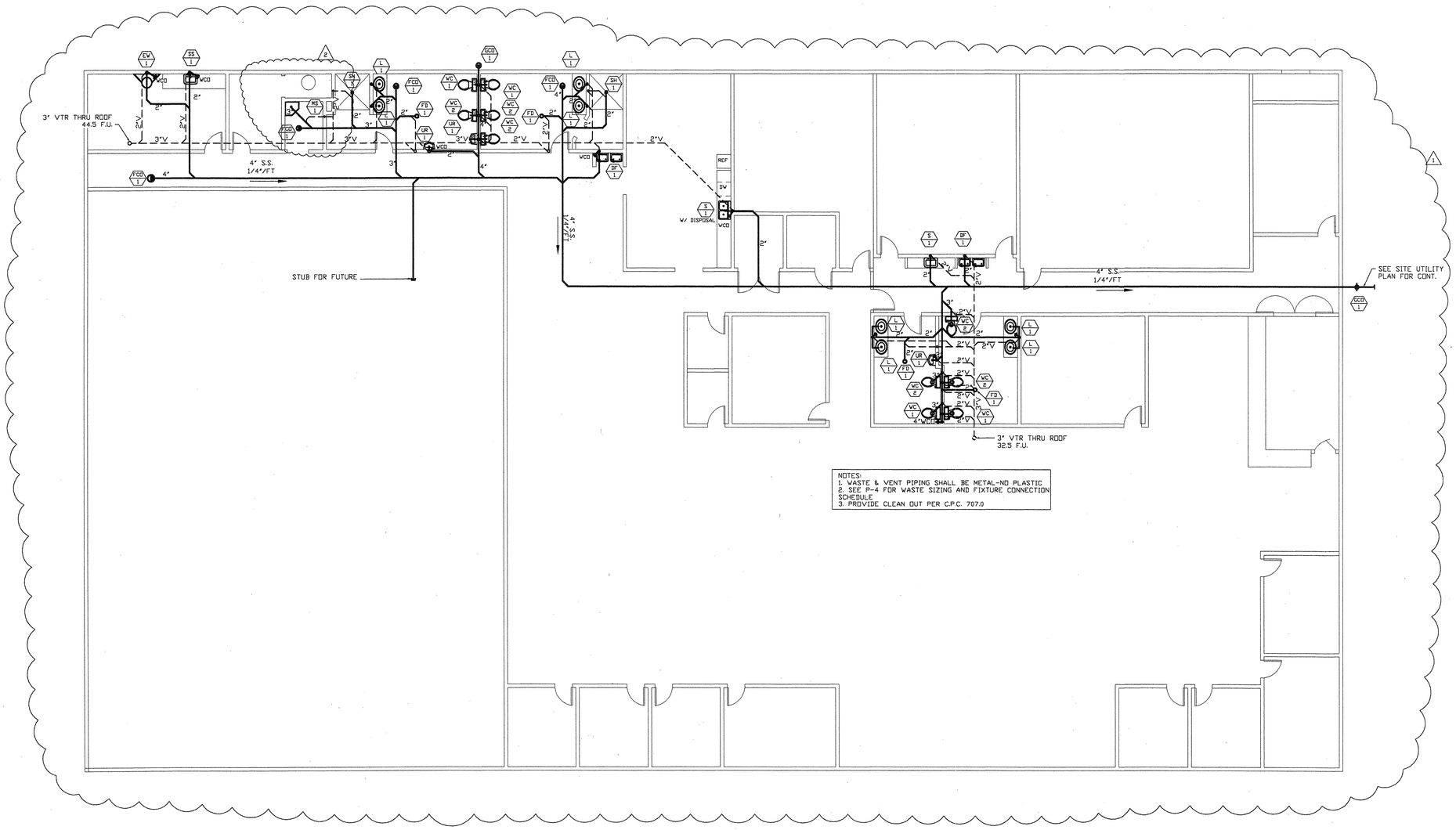

NOTES:
1. WASTE & VENT PIPING SHALL BE METAL-NO PLASTIC
2. SEE P-4 FOR WASTE SIZING AND FIXTURE CONNECTION SCHEDULE
3. PROVIDE CLEAN OUT PER C.P.C. 707.0

RECEIVED
DEC 13 2004
ACME CONSTRUCTION CO., INC.

REVISIONS	DATE
1 PER PLAN CHECK	11/29/04
2 PER PLAN CHECK	12/13/04
3	

DEHART
Plumbing, Heating & Air, Inc.
SINCE 1946
204 KERR AVE. * MODESTO, CA 95354
PH (209) 523-4578 * FAX (209) 523-4987
LICENSE #124566

ALL DESIGNS AND OTHER INFORMATION ON THESE DRAWINGS ARE FOR THE USE ON THE SPECIFIED PROJECT FOR DEHART PLUMBING, HEATING & AIR AND SHALL NOT BE USED OTHERWISE WITHOUT EXPRESS WRITTEN PERMISSION OF DEHART PLUMBING, HEATING & AIR.

PAGE TITLE
WASTE PIPING PLAN

PROJECT TITLE
SAN JOAQUIN VALLEY AIR POLLUTION CONTROL DISTRICT
MODESTO, CA

DATE: 10/19/04
DRAWN BY: M.TAYLOR
DESIGNED BY: E. FLECK
SCALE: SHOWN
SHEET NO. P1

SCALE: 1/8"=1'-0"
WASTE PIPING PLAN

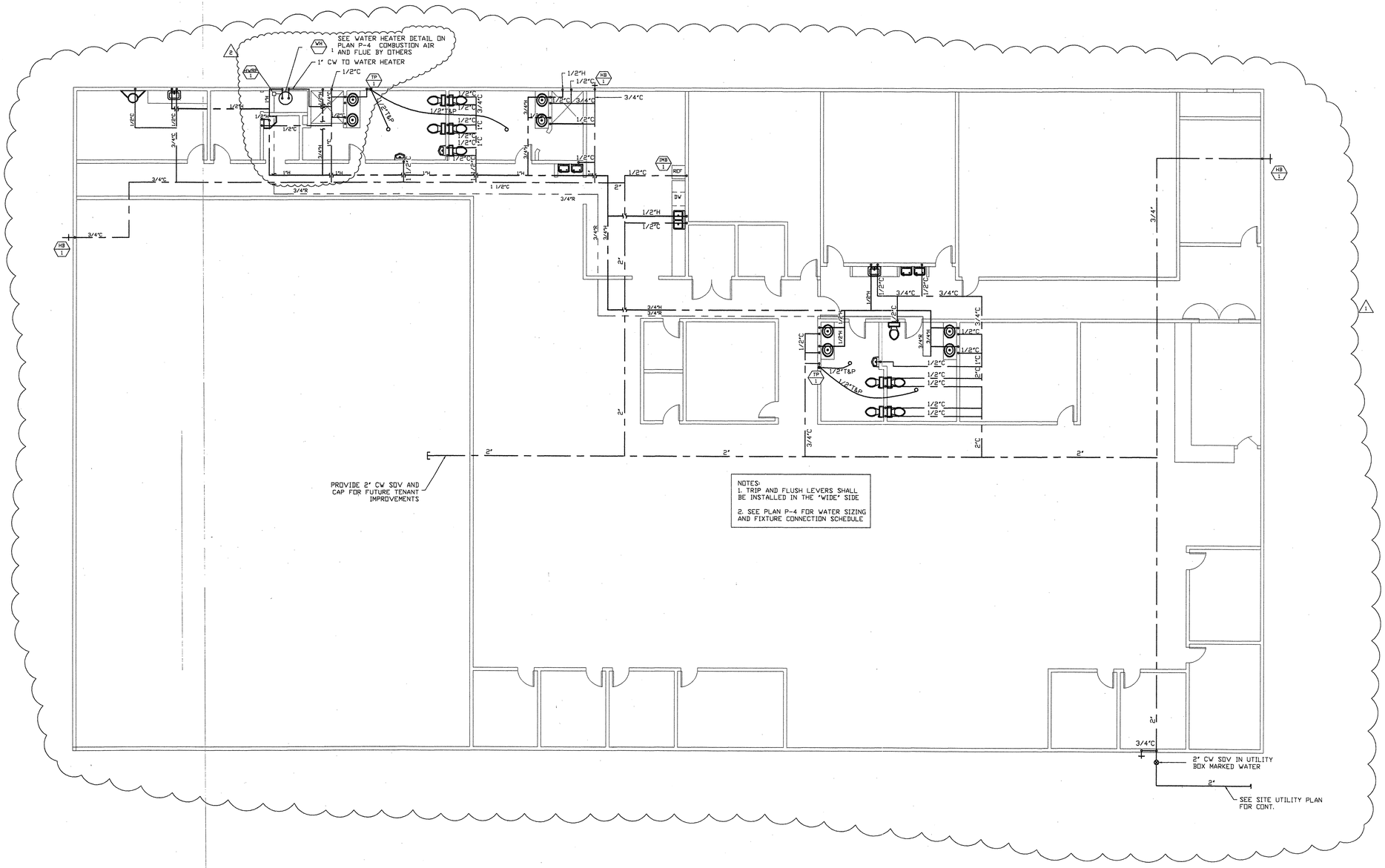

REVISIONS	DATE
1 PER PLAN CHECK	11/29/04
2 PER PLAN CHECK	12/13/04
3	

DEHART
Plumbing, Heating & Air, Inc.
SINCE 1946
209 KERR AVE. • MODESTO, CA 95354
PH (209) 523-4576 • FAX (209) 523-4561
LICENSE #724566

ALL DESIGNS AND OTHER INFORMATION ON THESE DRAWINGS ARE FOR THE USE ON THE SPECIFIED PROJECT FOR DEHART PLUMBING, HEATING & AIR AND SHALL NOT BE USED OTHERWISE WITHOUT EXPRESS WRITTEN PERMISSION OF DEHART PLUMBING, HEATING & AIR.

PAGE TITLE
WATER PIPING PLAN

PROJECT TITLE
SAN JOAQUIN VALLEY AIR POLLUTION CONTROL DISTRICT
MODESTO, CA

DATE: 10/19/04
DRAWN BY: M.TAYLOR
DESIGNED BY: E. FLECK
SCALE: SHOWN
SHEET NO. P2

SCALE: 1/8"=1'-0"
WATER PIPING PLAN

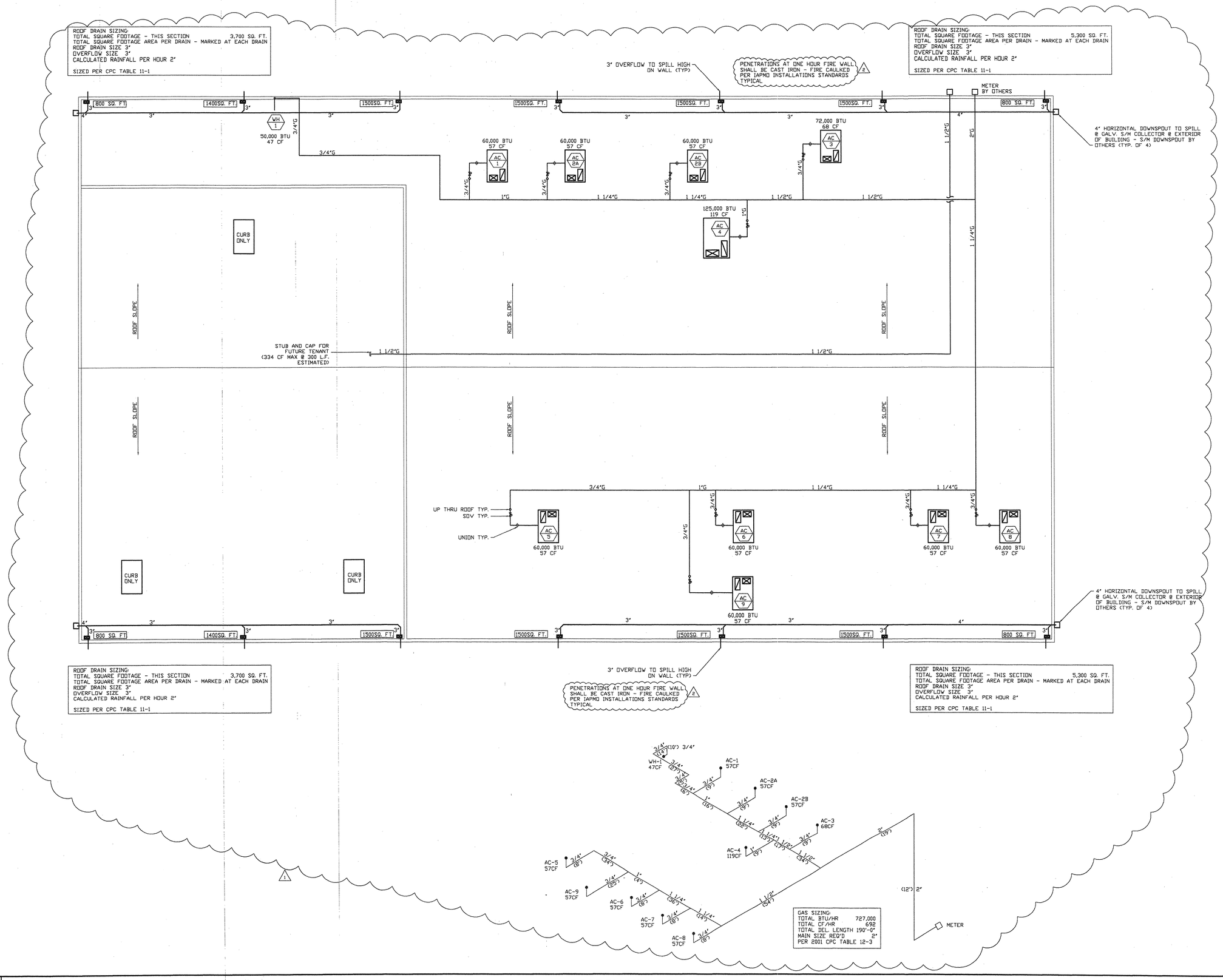

REVISIONS	DATE
1 PER PLAN CHECK	11/29/04
2 PER PLAN CHECK	12/13/04
3	

DEHART
Plumbing, Heating & Air, Inc.
SINCE 1946
204 KERR AVE. * MODESTO, CA 95354
PH (209) 523-4576 * FAX (209) 523-4587
LICENSE #724566
12-13-04

ALL DESIGNS AND OTHER INFORMATION ON THESE DRAWINGS ARE FOR THE USE ON THE SPECIFIED PROJECT FOR DEHART PLUMBING, HEATING & AIR AND SHALL NOT BE USED OTHERWISE WITHOUT EXPRESS WRITTEN PERMISSION OF DEHART PLUMBING, HEATING & AIR.

PAGE TITLE
ROOF PLUMBING PLAN

PROJECT TITLE
SAN JOAQUIN VALLEY AIR POLLUTION CONTROL DISTRICT
MODESTO, CA

DATE: 10/19/04
DRAWN BY: M.TAYLOR
DESIGNED BY: E. FLECK
SCALE: SHOWN
SHEET NO. P3

12 | SCALE: 1/8"=1'-0"

ROOF PLUMBING PLAN

NOT USED

NOT USED

NOT USED

NOT USED

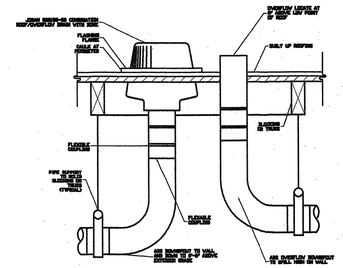

ROOF DRAIN DETAIL
N.T.S.

ROOR DRAIN DETAIL N.T.S.

		CD	SS	V	VTR	R	H	G	WCO	DW	DF	FAU
CD	CONDENSATE DRAIN											
SS	SANITARY SEWER											
V	WASTE VENT											
VTR	WASTE VENT THROUGH ROOF											
R	RETURN HOT WATER											
H	HOT WATER											
G	GAS											
WCO	WALL CLEAN OUT											
DW	DISH WASHING MACHINE											
DF	DRINKING FOUNTAIN											
FAU	FORCED AIR UNIT (GAS)											

HOT WATER RETURN
HOT WATER
COLD WATER
VENT
WASTE

PLUMBING LEGEND

	SYM.	WASTE CON	WASTE OUT	TRAP	VENT	C/W CON	C/W OUT	H/W CON	H/W OUT
WATER CLOSET(TANK)	WC	3"	3"	--	2",4"	1/2"	1/2"	--	--
WATER CLOSET(FLUSH)	WC	3"	3"	--	2",4"	1.25"	1"	--	--
URINAL	UR	2"	2"	2"	2"	1"	3/4"	--	--
LAVATORY	LAV	2"	2"	2"	2"	3/4"	1/2"	3/4"	1/2"
SINK(KITCHEN)	S	2"	2"	2"	2"	3/4"	1/2"	3/4"	1/2"
SERVICE SINK	SS	3"	3"	3"	3"	3/4"	1/2"	3/4"	1/2"
SHOWER	SH	2"	2"	2"	2"	3/4"	1/2"	3/4"	1/2"
BATHTUB	BT	1.5"	1.5"	1.5"	1.5"	3/4"	1/2"	3/4"	1/2"
DRINKING FOUNTAIN	DF	1.5"	1.5"	1.5"	1.5"	3/4"	1/2"	--	--
FLOOR DRAIN 2" & 3"	FD	2",3"	2",3"	2",3"	2",3"	--	--	--	--
FLOOR SINK	FS	2"	2"	2"	2"	--	--	--	--
CLOTHES WASHER	CW	2"	2"	2"	2"	3/4"	1/2"	3/4"	1/2"
HOSE BIBB	HB	--	--	--	--	3/4"	3/4"	--	--

FIXTURE CONNECTION SCHEDULE

1) ALL WASTE PIPING SHALL BE CAST IRON - SLOPED AT 1/4" PER FOOT OR AS NOTED ON PLAN.
2) ALL WATER PIPING SHALL BE TYPE "L" COPPER TUBE WITH WROUGHT COPPER FITTINGS.
3) FLOOR DRAINS SHALL HAVE AUTOMATIC TRAP PRIMERS.
4) NON-REMOVABLE VACUUM BREAKERS SHALL BE INSTALLED ON ALL HOSE BIBBS AND MOP SINKS, PER 2000 C.P.C.
5) PROVIDE SEISMIC RESTRAINTS AND EXPANSION TANK AT WATER HEATERS, PER 2000 C.P.C.
6) PROVIDE TEMPERATURE AND PRESSURE RELIEF AT WATER HEATER AND INSTALL PIPING AT 1/4" PER FOOT SLOPE TO FLOOR SINK AS SHOWN.
7) ALL PLUMBING AND PLUMBING FIXTURES SHALL COMPLY WITH TITLE 24 HANDICAPPED STANDARDS AND REGULATIONS.
8) EXPOSED P-TRAPS SHALL BE WRAPPED TO PROTECT THE HANDICAPPED.
9) TRIP AND FLUSH LEVERS SHALL BE INSTALLED ON THE "WIDE" SIDE TO ACCOMMODATE THE HANDICAPPED.
10) FLUSHOMETERS SHALL NOT EXCEED 1.6 GALLONS PER FLUSH.

BUILDING PLUMBING NOTES

DOMESTIC WATER DEMAND AND PIPE SIZING

WATER PIPES SHALL BE SIZED BY APPENDIX "A" OF THE UNIFORM PLUMBING CODE WHEN ANY OF THE FOLLOWING CONDITIONS APPLY:
1. PRESSURE LOSSES IN THE SYSTEM DUE TO BACKFLOW PREVENTION VALVE, WATER SOFTENER, ETC. (EXCPET WATER METERS).
2. SINGLE STORY STRUCTURE WITH BACKFLOW PREVENTION VALVE.
3. STRUCTURES OVER TWO STORIES.
4. TOTAL DEVELOPED LENGTH OVER 1,000 FEET.

PLAN CHECK # _____ DATE: 11/11/04 PREPARED BY: E. FLECK

PROJECT: SJVAPCD LOCATION: MODESTO, CA

WATER METER SIZE 2"
TOTAL FIXTURE UNITS: 64.5 EQUAL TOTAL GPM 56
TOTAL DISTANCE FROM WATER METER TO MOST REMOTE PLBG FIXTURE: 420'

TOTAL RISE FOR HEAD LOSS FT. 4' X 0.43	1.72	PSI
PSI REQUIRED FOR WATER CLOSET/URINAL (*F.V. = 15.0 PSI, F.T. = 8.0 PSI)	15.0	PSI
PSI FLOW LOSS THROUGH WATER METER (CHART A-1)	3.0	PSI
PSI FLOW LOSS THROUGH BACKFLOW PREVENTER (RP=12.0 PSI, D.C.=12.0 PSI)	12.0	PSI
TOTAL SYSTEM LOSS	31.72	PSI
MINIMUM PSI AVAILABLE @ JOBSITE	50	
TOTAL SYSTEM LOSS IN PSI	31.72	
REMAINING PSI AVAILABLE (IF NEGATIVE USE BOOSTER PUMP)	18.28	
BOOSTER PUMP PSI	N/A	
TOTAL REMAINING PSI AVAILABLE	18.28	

PSI AVAILABLE 18.28 / 420 TOTAL FEET = .0435 X 100 4.35 PSI/100 FT.
USE LINE 2" ON CHART A-4

2" PIPE WILL DELIVER	84	GPM FOR	167	*F.V. FIXTURE UNITS	300		
1 1/2" PIPE WILL DELIVER	38	GPM FOR	20	*F.V. FIXTURE UNITS	65		
1 1/4" PIPE WILL DELIVER	23	GPM FOR	0	*F.V. FIXTURE UNITS	33		*F.T. FIXTURE UNITS
1" PIPE WILL DELIVER	13	GPM FOR	0	*F.V. FIXTURE UNITS	16		*F.T. FIXTURE UNITS
3/4" PIPE WILL DELIVER	7	GPM FOR	0	*F.V. FIXTURE UNITS	7		*F.T. FIXTURE UNITS
1/2" PIPE WILL DELIVER	2.5	GPM FOR	0	*F.V. FIXTURE UNITS	2.5		*F.T. FIXTURE UNITS
PIPE WILL DELIVER	___	GPM FOR	___	*F.V. FIXTURE UNITS	___		*F.T. FIXTURE UNITS
PIPE WILL DELIVER	___	GPM FOR	___	*F.V. FIXTURE UNITS	___		*F.T. FIXTURE UNITS
PIPE WILL DELIVER	___	GPM FOR	___	*F.V. FIXTURE UNITS	___		*F.T. FIXTURE UNITS
PIPE WILL DELIVER	___	GPM FOR	___	*F.V. FIXTURE UNITS	___		*F.T. FIXTURE UNITS
PIPE WILL DELIVER	___	GPM FOR	___	*F.V. FIXTURE UNITS	___		*F.T. FIXTURE UNITS

F.V. = FLUSHOMETER
F.T. = FLUSH TANK

WATER DEMAND

FIXTURE DESCRIPTION	QTY	F.U. EACH	TOTAL F.U.	HOT F.U.
WC-1 & 2 TANK	10	2.5	25.0	0
L-1	8	1.0	8.0	6.0
S-1 & 2	3	2.0	6.0	4.5
UR-1	3	4.0	12.0	0
MS-1	1	3.0	3.0	2.25
SH-1	2	2.0	4.0	3.0
EW-1	1	1.0	1.0	0
HB-1	1	2.5	2.5	0
HB-1(EA ADDITITIONAL)	2	1.0	2.0	0
DF-1	2	0.5	1.0	0
TOTAL(S)			64.5	15.75

2" MINIMUM REQUIRED PER 2001 CPC
(CHART A-4- APPENDIX "A")

MAXIMUM WATER SIZING

FIXTURE DESCRIPTION	QTY	F.U. EACH	TOTAL F.U.
WC-1 & WC-2	10.0	4.0	40.0
L-1	8.0	2.0	16.0
S-1 & 2	3	2.0	6.0
UR-1	3	2.0	6.0
MS-1(3")	1	3.0	3.0
SH-1	2	2.0	4.0
EW-1	1	1.0	1.0
DF-1	2	0.5	1.0
FD-1(EMERGENCY)	4	0	0
TOTAL(S)			77.0

4" MIN. REQUIRED PER 2001 CPC TABLE 7-5

MAXIMUM WASTE SIZING

FIXTURE	DESCRIPTION
WC-1	KOHLER # K-3427 ADA APPROVED "TANK TYPE" WATER CLOSET WITH CHURCH #255SSC OPEN FRONT SEAT
WC-2	KOHLER # K-3423 STANDARD HEIGHT "TANK TYPE" WATER CLOSET WITH CHURCH # 255SSC OPEN FRONT SEAT
L-1 & 2	KOHLER # K-2900-4 FARMINGTON 19x19 LAVATORY WITH T&S B-2711 SINGLE HANDLE FAUCET
S-1	DAYTON # D11721-20 ga STAINLESS STEEL SINGLE COMPARTMENT SINK WITH MOEN # 67425 SINGLE HANDLE FAUCET
S-2	DAYTON # DSE23322 20 ga STAINLESS STEEL 2-COMPARTMENT SINK WITH MOEN # 67425 SINGLE HANDLE FAUCET AND BADGER 5 DISPOSAL
UR-1	KOHLER # K-4960-ET "BARON" WALL HUNG URINAL WITH SLOAN # 186 "REGAL" FLUSH VALUE.
MS-1	KOHLER # K-6710 "WHITBY" CAST IRON CORNER SERVICE SINK WITH T&S @ B-0665-BSTR SERVICE SINK FAUCET, RIM GUARD, 5'-0" HOSE AND WALL BARCKET
SH-1	FLORESTONE # 35-62H CALIFORNIA ADA COMPLIANT FIBERGLASS SHOWER WITH MOEN # 8346 SHOWER VALVE, HAND SHOWER & SLIDE BAR
DF-1	HAWS # HWUAC8L BI-LEVEL ADA APPROVED ELECTRONIC DRINKING FOUNTAIN
EW-1	HAWS # 7260 BT WALL MOUNT EYE WASH W/ GREEN PLASTIC BOWL
WH-1	BRADFORD WHITE # M-4-503T6FBN-5- 50 GALLON NATURAL GAS HOT WATER HEATER-
FD-1	ZURN # 266-FP2290-N.H. CAST IRON FLOOR DRAIN WITH ADJUSTABLE NICKLE BRONZE TOP
TP-1	P.P.P. #500 AUTOMATIC TRAP PRIMER WITH DISTRIBUTION CUP FOR MULTIPLE DRAINS
FCO-1	ZURN -266 C02500-N.H. CAST IRON FLOOR CLEAN OUT WITH ADJUSTABLE NICKLE BRONZE TOP
RD-1	JR. SMITH #SQ-1-1-481 CAST IRON COMBINATION ROOF OVERFLOW DRAIN W/ CAST IRON DOMER STRAINER
GCO-1	CHRISTY #G-5 10 3/6" x 12" CONCRETE UTLITY BOX WITH LID MARKED SEWER
IMB-1	SPECIALTY PRODUCTS #OB-104 PLASTIC ICE MARKER OUTLET
HB-1	WOODFORD #24P-3/4" HOSE BIB WITH VACUUM BREAKER

PLUMBING FIXT. SCHEDULE

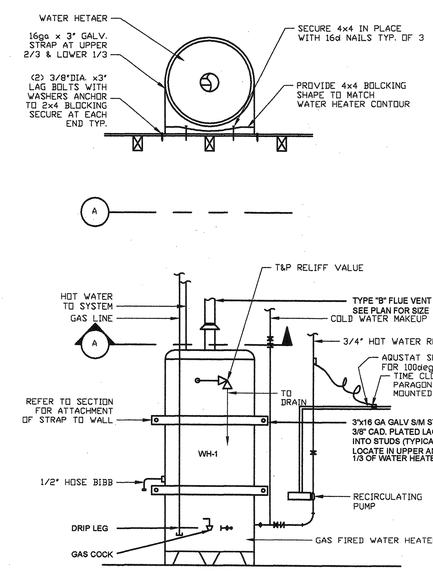

WATER HEATER DETAIL

REVISIONS	DATE
1 PER PLAN CHECK	11/29/04
2 PER PLAN CHECK	12/13/04
3	

DEHART
Plumbing, Heating & Air, Inc.
SINCE 1946
204 KERR AVE. * MODESTO, CA 95354
PH (209) 523-4579 * FAX (209) 523-4587
LICENSE #124566

ALL DESIGNS AND OTHER INFORMATION ON THESE DRAWINGS ARE FOR THE USE ON THE SPECIFIED PROJECT FOR DEHART PLUMBING, HEATING & AIR AND SHALL NOT BE USED OTHERWISE WITHOUT EXPRESS WRITTEN PERMISSION OF DEHART PLUMBING, HEATING & AIR

PAGE TITLE

PROJECT TITLE
SAN JOAQUIN VALLEY AIR POLLUTION CONTROL DISTRICT
MODESTO, CA

DATE: 10/19/04
DRAWN BY: M.TAYLOR
DESIGNED BY: E. FLECK
SCALE: SHOWN
SHEET NO. P4

⊠	SUPPLY AIR DIFFUSER
⊠	RETURN AIR GRILLE
⊠	EXHAUST AIR GRILLE
⅂	MANUAL DAMPER
SD	SMOKE DETECTOR
CFM	CUBIC FEET PER MINUTE
S.A.	SUPPLY AIR
R.A.	RETURN AIR
O.A.	OUTSIDE AIR

NOTE:
THERE SHALL BE NO EXHAUST OR PLUMBING VENTS WITHIN A 10' RADIUS OF ANY FRESH AIR INTAKE.

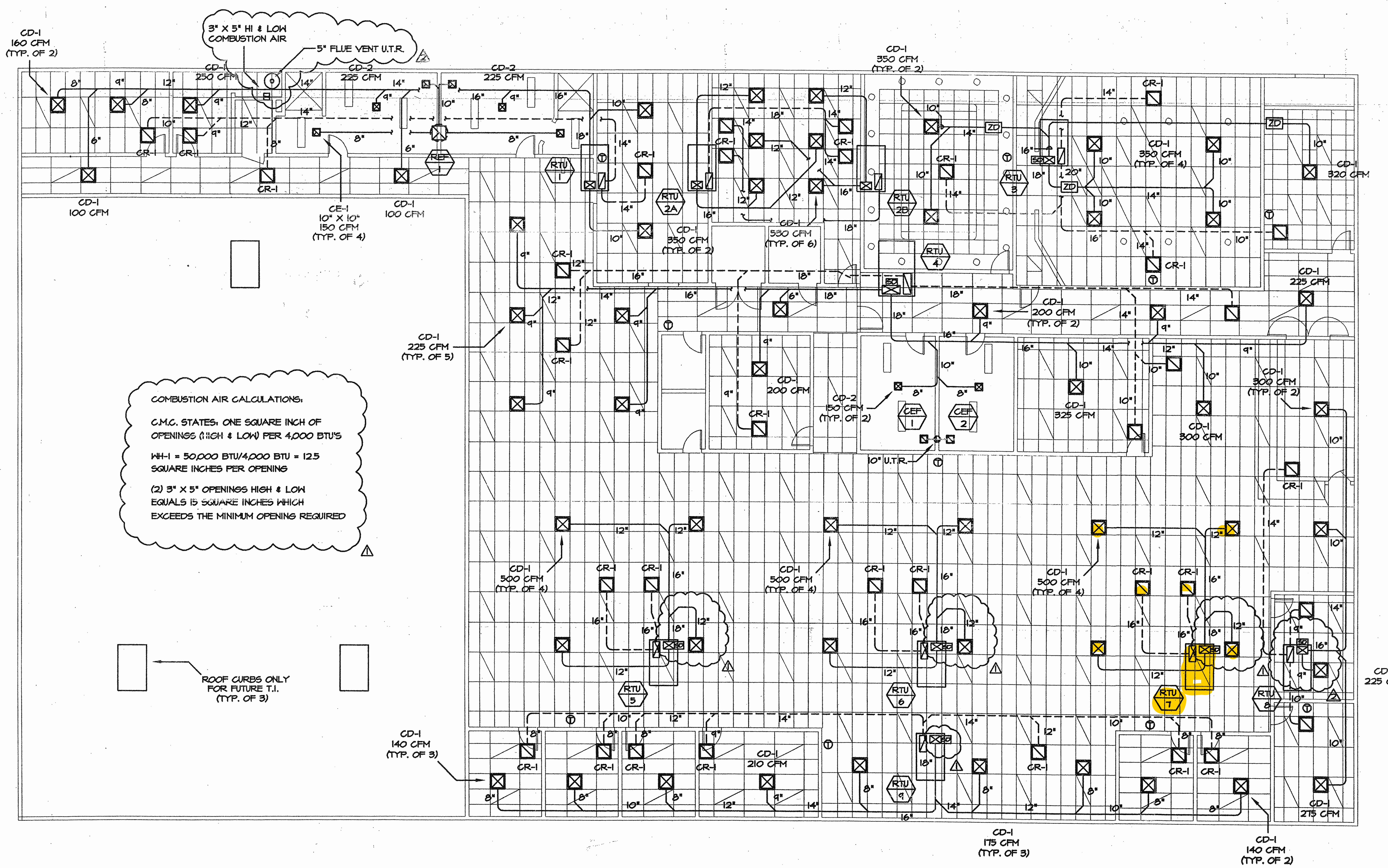

AIR DISTRIBUTION PLAN

SCALE: 1/8" = 1'-0"

RECEIVED
DEC 1 3 2004
ACME CONSTRUCTION CO., INC.

REVISIONS	DATE
1 PLAN CHECK	11/22/04
2 PLAN CHECK	12/13/04
3	

DEHART Plumbing, Heating & Air, Inc.
204 KERR AVE. • MODESTO, CA 95354
PH (209) 523-4578 • FAX (209) 522-4587
LICENSE #724560

ALL DESIGNS AND OTHER INFORMATION ON THESE DRAWINGS ARE FOR THE USE ON THE SPECIFIED PROJECT FOR DEHART PLUMBING, HEATING & AIR AND SHALL NOT BE USED OTHERWISE WITHOUT EXPRESS WRITTEN PERMISSION OF DEHART PLUMBING, HEATING & AIR.

PAGE TITLE: AIR DISTRIBUTION PLAN

PROJECT TITLE: SAN JOAQUIN VALLEY AIR POLLUTION CONTROL DISTRICT, MODESTO, CA

DATE: 9/28/04
DRAWN BY: J. HARDIN
DESIGNED BY: J. HARDIN
SCALE: 1/8" = 1'-0"
SHEET NO. M-1

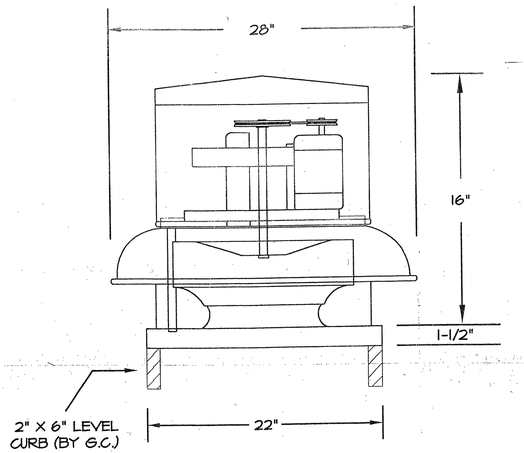

ROOF EXHAUST FAN DETAIL | 4

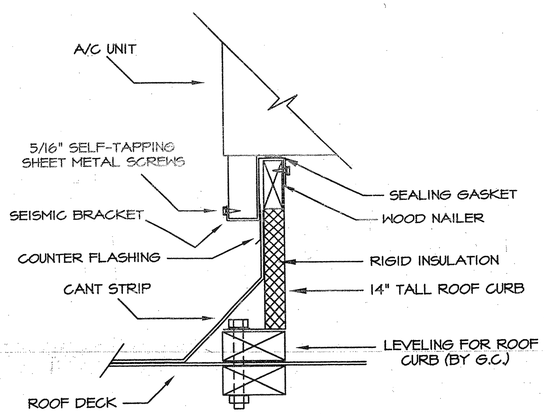

ROOF CURB DETAIL | 3

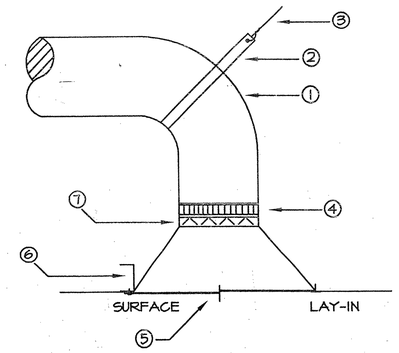

NOTES:

1. FLEX DUCT. RADIUS 150% OF DUCT DIAMETER
2. 24 GAUGE STRAP
3. 12 GAUGE WIRE TO STRUCTURE
4. PANDUIT STRAP
5. TYPICAL DIFFUSER
6. METAL CEILING JOIST
7. OPPOSED BLADE DAMPER

DIFFUSER DETAIL | 2

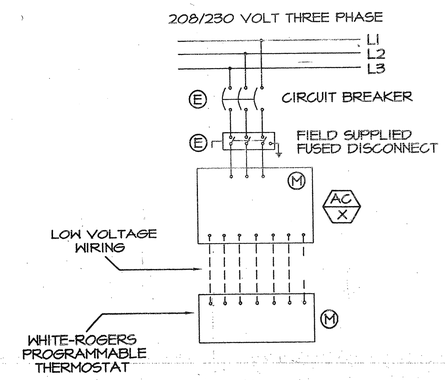

M BY DIVISION 15
E BY DIVISION 16

HIGH & LOW VOLTAGE DETAIL | 1

MARK	MAKE	MODEL	SIZE	OPTIONS
CD-1	SHOEMAKER	700MA	24" X 24"	
CR-1	SHOEMAKER	830	24" X 24"	
CD-2	SHOEMAKER	700MA	AS NOTED	W/OBD
CE-1	SHOEMAKER	700MA	AS NOTED	

DIFFUSER SCHEDULE | 5

MARK	MAKE	MODEL	CFM	E.S.P.	SONES	VOLTAGE	AMPS	WEIGHT
REF-1	DAYTON	4YC88	644	0.5"	10.8	115	2.3	61 LBS.
CEF-1	BROAN	L200	196	0.25"	2.3	115	1.8	21 LBS.
CEF-2	BROAN	L200	196	0.25"	2.3	115	1.8	21 LBS.

MARK	MAKE	MODEL	CFM	COOLING BTU	HEATING BTU	ELECT.	M.C.A.	MOCP	WEIGHT	O.A. CFM
RTU-1	BRYANT	580FPV060060N	2000	60,000	60,000	208-230/3	27.3	35.0	440 LBS.	829
RTU-2A	BRYANT	580FPV048060N	1600	48,000	60,000	208-230/3	24.2	30.0	470 LBS.	66
RTU-2B	BRYANT	580FPV048060N	1600	48,000	60,000	208-230/3	24.2	30.0	470 LBS.	66
RTU-3	BRYANT	580FPV072074	2400	60,000	72,000	208-230/3	32.4	40.0	565 LBS.	862
RTU-4	BRYANT	580FPV090125	3000	60,000	125,000	208-230/3	40.1	45.0	870 LBS.	765
RTU-5	BRYANT	580FPV060060N	2000	60,000	60,000	208-230/3	27.3	35.0	440 LBS.	206
RTU-6	BRYANT	580FPV060060N	2000	60,000	60,000	208-230/3	27.3	35.0	440 LBS.	206
RTU-7	BRYANT	580FPV060060N	2000	60,000	60,000	208-230/3	27.3	35.0	440 LBS.	206
RTU-8	BRYANT	580FPV036060N	1200	36,000	60,000	208-230/3	17.7	25.0	460 LBS.	140
RTU-9	BRYANT	580FPV048060N	1600	48,000	60,000	208-230/3	24.2	30.0	470 LBS.	198

NOTES:

1. PROVIDE SMOKE DETECTORS IN SUPPLY DUCT PER 2001 C.M.C.
2. ALL MECHANICAL EQUIPMENT SHOULD BE LISTED AND LABELED BY AN APPROVED TESTING AGENCY.
3. UNITS RTU-2A & RTU-2B TO BE CONTROLLED WITH A LEAD/LAG RELAY. LOW VOLTAGE TO HAVE A 2-STAGE THERMOSTAT.

EQUIPMENT SCHEDULE | 6

1. LINE ALL EXTERIOR PLENUMS WITH 1" DUCT INSULATION AT EXTERIOR OF CHASE.
2. ALL DIFFUSERS SHALL BE LEFT IN FULL OPEN POSITION. ANY SYSTEM BALANCING SHALL BE ACCOMPLISHED BY DUCT DAMPERS.
3. ALL WORK SHALL BE IN ACCORDANCE WITH 2001 C.M.C.
4. ALL PENETRATIONS THROUGH ROOF SYSTEM SHALL BE COORDINATED WITH THE GENERAL & ROOFING CONTRACTORS.
5. THE MECHANICAL CONTRACTOR SHALL VERIFY CURB REQUIREMENTS AND SUPPLY THE REQUIRED CURB AND/OR OTHER ITEMS REQUIRED TO FIT THE HVAC UNIT TO THE DESIGNATED AREAS.
6. ALL THERMOSTATS SHALL BE OF THE SETBACK VARIETY AND SHALL HAVE SET POINTS INDICATING 68 DEGREES ON HEATING AND 78 DEGREES ON COOLING.
7. ALL DUCTWORK USED ON THIS PROJECT SHALL BE INSULATED WITH A R-4.6 RATED DUCT AND A ETHELYENE OUTER WRAP.
8. COORDINATE THE INSTALLATION OF THE GAS SERVICE TO THE HVAC UNIT WITH THE PLUMBING CONTRACTOR.
9. SUPPLY AND INSTALL UNIT WITH PROPER ANCHORAGE.
10. SIZE DIFFUSERS AT GYPSUM BOARD CEILINGS PER MANUFACTURERS CATALOG NUMBER FOR DUCT SIZE.
11. COORDINATE DUCTWORK RUNS TO AVOID CROSSOVER PROBLEMS AT RESTRICTED CLEARANCE AREAS.
12. SUPPLY THE OWNER WITH A COMPLETE PACKAGE INCLUDING MANUALS, OPERATING INSTRUCTIONS, AND WARRANTY CARDS.
13. BALANCE AIR FLOWS, SET OUTDOOR AIR HOODS TO MAXIMUM OPEN POSITION.
14. PROGRAM THERMOSTATS TO OWNERS REQUIREMENTS.
15. MOUNT THERMOSTATS BETWEEN 36" - 48" A.F.F.

MECHANICAL NOTES | 7

REVISIONS	DATE
1 PLAN CHECK	11/22/04
2 PLAN CHECK	12/13/04
3	

DEHART Plumbing, Heating & Air, Inc.
SINCE 1946
204 KERR AVE. • MODESTO, CA 95354
PH (209) 523-4576 • FAX (209) 523-4587
LICENSE #724966

ALL DESIGNS AND OTHER INFORMATION ON THESE DRAWINGS ARE FOR THE USE ON THE SPECIFIED PROJECT FOR DEHART PLUMBING, HEATING & AIR AND SHALL NOT BE USED OTHERWISE WITHOUT EXPRESS WRITTEN PERMISSION OF DEHART PLUMBING, HEATING & AIR.

PAGE TITLE: DETAILS & SCHEDULES

PROJECT TITLE: SAN JOAQUIN VALLEY AIR POLLUTION CONTROL DISTRICT, MODESTO, CA

DATE: 9/28/04

DRAWN BY: J. HARDIN

DESIGNED BY: J. HARDIN

SCALE: AS NOTED

SHEET NO. M-2

PERFORMANCE CERTIFICATE OF COMPLIANCE — Part 1 of 3 — PERF-1

PROJECT NAME: San Joaquin Valley Air Pollution Control — DATE: 10/11/2004
PROJECT ADDRESS: Modesto — Building Permit #
DOCUMENTATION AUTHOR: Douglas Bearman Associates — TELEPHONE: (209) 524-1623

GENERAL INFORMATION

DATE OF PLANS	BUILDING CONDITIONED FLOOR AREA	CLIMATE ZONE
	13,032 Sq.Ft.	12

BUILDING TYPE: [X] NONRESIDENTIAL [ ] HIGH RISE RESIDENTIAL [ ] HOTEL/MOTEL GUEST ROOM
PHASE OF CONSTRUCTION: [X] NEW CONSTRUCTION [ ] ADDITION [ ] ALTERATION [ ] EXISTING + ADDITION

STATEMENT OF COMPLIANCE

This Certificate of Compliance lists the building features and performance specifications needed to comply with Title 24, Parts 1 and 6, of the State Building Code. This certificate applies only to a Building using the performance compliance approach.

DOCUMENTATION AUTHOR: Matthew Billy — SIGNATURE — DATE

The Principal Designers hereby certify that the proposed building design represented in the construction documents and modelled for this permit application are consistent with all other forms and worksheets, specifications, and other calculations submitted with this permit application. The proposed building as designed meets the energy efficiency requirements of the State Building Code, Title 24, Part 6.

ENV. LTG. MECH.

[ ] [ ] [ ] 1. I hereby affirm that I am eligible under the provisions of Division 3 of the Business and Professions Code to sign this document as the person responsible for its preparation; and that I am licensed as a civil engineer, mechanical engineer, electrical engineer or architect.

[ ] [ ] [ ] 2. I affirm that I am eligible under the provisions of Division 3 of the Business and Professions Code Section 5537.2 or 6737.3 to sign this document as the person responsible for its preparation, and that I am a licensed contractor preparing documents for work that I have contracted to perform.

[ ] [ ] [ ] 3. I affirm that I am eligible under Division 3 of the Business and Professions Code to sign this document because it pertains to a structure or type of work described as exempt pusuant to Business and Professions Code Sections 5537, 5538, and 6737.1. (These sections of the Business and Professions Code ae printed in full in the Nonresidential Manual.)

ENVELOPE COMPLIANCE

Indicate location on plans of Note Block for Mandatory Measures
Required Forms: ENV-1
PRINCIPAL ENVELOPE DESIGNER - NAME: Robert Hart, Architect — SIGNATURE — LIC. NO. — DATE

LIGHTING COMPLIANCE

Indicate location on plans of Note Block for Mandatory Measures: Lighting Compliance Not In The Scope Of
Required Forms: This Submittal
PRINCIPAL LIGHTING DESIGNER - NAME — SIGNATURE — LIC. NO. — DATE

MECHANICAL COMPLIANCE

Indicate location on plans of Note Block for Mandatory Measures
Required Forms: MECH-1, MECH-2, MECH-3
PRINCIPAL MECHANICAL DESIGNER - NAME: Dehart Plumbing, Heating & Air, Inc. — SIGNATURE — LIC. NO. — DATE

Run Initiation Time: 10/11/04 15:38:02 Run Code: 1097534282
EnergyPro 3.1 By EnergySoft User Number: 4751 Job Number: Page 2 of 22

PERFORMANCE CERTIFICATE OF COMPLIANCE — Part 2 of 3 — PERF-1

San Joaquin Valley Air Pollution Control — DATE 10/11/2004

ANNUAL SOURCE ENERGY USE SUMMARY (kBtu/sqft-yr)

	Standard Design	Proposed Design	Compliance Margin
Space Heating	[illegible]	[illegible]	0.45
Space Cooling	24.40	18.97	5.43
Indoor Fans	16.92	22.74	-5.82
Heat Rejection	0.00	0.00	0.00
Pumps & Misc.	0.00	0.00	0.00
Domestic Hot Water	3.00	3.00	0.00
Lighting	34.46	34.46	0.00
Receptacle	18.12	18.12	0.00
Process	0.85	0.85	0.00
TOTALS:	106.07	106.02	0.05

Percent better than Standard: 0.1% (0.1% excluding process)

BUILDING COMPLIES

GENERAL INFORMATION

Building Orientation	(West) 270 deg	Conditioned Floor Area	13,032 sqft.
Number of Stories	1	Unconditioned Floor Area	0 sqft.
Number of Systems	10	Conditioned Footprint Area	13,032 sqft.
Number of Zones	18		

	Orientation	Gross Area	Glazing Area	Glazing Ratio
Front Elevation	(West)	1,200 sqft.	180 sqft.	15.0%
Left Elevation	(North)	1,244 sqft.	265 sqft.	21.3%
Rear Elevation	(East)	990 sqft.	0 sqft.	0.0%
Right Elevation	(South)	1,935 sqft.	64 sqft.	3.3%
Total		5,369 sqft.	509 sqft.	9.5%
Roof		13,032 sqft.	0 sqft.	0.0%

	Standard	Proposed
Lighting Power Density	1.170 W/sqft.	1.170 W/sqft.
Prescriptive Env. Heat Loss	1,403 Btu/h	1,285 Btu/h
Prescriptive Env. Heat Gain	153,528 Btu/h-F	148,313 Btu/h-F

LEED™ Energy & Atmosphere Credit
Savings vs. Title 24[1]: 0.06%
Energy Performance Credit[2]: 0 Points
1. excludes process and receptacle 2. see LEED table [illegible]

Remarks:

Run Initiation Time: 10/11/04 15:38:02 Run Code: 1097534282
EnergyPro 3.1 By EnergySoft User Number: 4751 Job Number: Page 3 of 22

PERFORMANCE CERTIFICATE OF COMPLIANCE — Part 3 of 3 — PERF-1

PROJECT NAME: San Joaquin Valley Air Pollution Control — DATE 10/11/2004

ZONE INFORMATION

System Name	Zone Name	Occupancy Type	Floor Area (sqft.)	Inst. LPD (W/sf)[1]	Port. LPD (W/sf)[1]	Ctrl. Credits (W/sf)[2]	Tailored LPD (W/sf)[3]	Proc. Loads (W/sf)
RTU-1	Kitchen	Kitchen & Food Prep	445	*1.700				
	Restrooms	Corridor/Restroom/Support	450	*0.600				
	Hall	Corridor/Restroom/Support	385	*0.600				
	Warehouse	Industrial Storage	180	*0.600				
	Shop	Precision Industrial	225	*1.500				
RTU-2A/2B	Computer Room	Electrical & Mechanical	440	*0.700				1.500
RTU-3	Conference	Convention/Conference	1,725	*1.500				
RTU-4	Office	Office	1,285	*1.300				
	Hall	Corridor/Restroom/Support	767	*0.600				
	Storage	Corridor/Restroom/Support	455	*0.600				
	Restrooms	Corridor/Restroom/Support	335	*0.600				
RTU-5	Office (100)	Office	1,370	*1.300				
RTU-6	Office (100)	Office	1,370	*1.300				
RTU-7	Office (100)	Office	1,370	*1.300				
RTU-8	Lobby	Lobby (Office & Waiting)	560	*1.100				
	Office	Office	370	*1.300				
RTU-9	Office	Office	1,200	*1.300				
	Hall	Corridor/Restroom/Support	120	*0.600				

Notes: 1. See LTG-1 (items marked with asterisk, see LTG-2 by others) 2. See LTG-3 3. See LTG-4 — Items above require special documentation

EXCEPTIONAL CONDITIONS COMPLIANCE CHECKLIST

The local enforcement agency should pay special attention to the items specified in this checklist. These items require special written justification and documentation, and special verification to be used with the performance approach. The local enforcement agency determines the adequacy of the justification, and may reject a building or design that otherwise complies based on the adequacy of the special justification and documentation submitted.

	Plan	Field
The HVAC System "Bryant - 580FPV036060N" includes an Economizer. This system has a cooling output < 75,000 btuh or a supply cfm < 2500.		
The HVAC System "Bryant - 580FPV060060N" includes an Economizer. This system has a cooling output < 75,000 btuh or a supply cfm < 2500.		
The HVAC System "Bryant - 580FPV072074" includes an Economizer. This system has a cooling output < 75,000 btuh or a supply cfm < 2500.		

The exceptional features listed in this performance approach application have specifically been reviewed. Adequate written justification and documentation for their use have been provided by the applicant.

Authorized Signature or Stamp ____

Run Initiation Time: 10/11/04 15:38:02 Run Code: 1097534282
EnergyPro 3.1 By EnergySoft User Number: 4751 Job Number: Page 4 of 22

ENVELOPE COMPLIANCE SUMMARY — Performance — ENV-1

PROJECT NAME: San Joaquin Valley Air Pollution Control — DATE 10/11/2004

OPAQUE SURFACES

#	Surface Type	Framing Type	Area	U-Fac.	Act. Azm.	Tilt	Solar Gains Y/N	Form 3 Reference	Location / Comments
1	Roof	Wood	445	0.052	270	0	X	R-19 Suspended Ceiling	Kitchen
2	Wall	Wood	113	0.065	180	90	X	R-19 Wall	Kitchen
3	Roof	Wood	450	0.052	270	0	X	R-19 Suspended Ceiling	Restrooms
4	Wall	Wood	410	0.065	180	90	X	R-19 Wall	Restrooms
5	Roof	Wood	385	0.052	270	0	X	R-19 Suspended Ceiling	Hall
6	Wall	Wood	40	0.065	90	90	X	R-19 Wall	Hall
7	Door	None	20	0.387	90	90	X	Solid Wood Door	Hall
8	Roof	Wood	180	0.052	270	0	X	R-19 Suspended Ceiling	Warehouse
9	Wall	Wood	165	0.065	180	90	X	R-19 Wall	Warehouse
10	Roof	Wood	225	0.052	270	0	X	R-19 Suspended Ceiling	Shop
11	Wall	Wood	110	0.065	90	90	X	R-19 Wall	Shop
12	Wall	Wood	208	0.065	180	90	X	R-19 Wall	Shop
13	Roof	Wood	440	0.052	270	0	X	R-19 Suspended Ceiling	Computer Room
14	Wall	Wood	200	0.065	180	90	X	R-19 Wall	Computer Room
15	Roof	Wood	1,725	0.052	270	0	X	R-19 Suspended Ceiling	Conference
16	Wall	Wood	264	0.065	270	90	X	R-19 Wall	Conference
17	Wall	Wood	880	0.065	180	90	X	R-19 Wall	Conference
18	Door	None	20	0.581	180	90	X	Hollow Metal Door	Conference
19	Door	None	20	0.581	180	90	X	Hollow Metal Door	Conference
20	Door	None	20	0.581	180	90	X	Hollow Metal Door	Conference

FENESTRATION SURFACES

Site Assembled Glazing [ ] Check box if Building is >= 100,000 sqft of CFA and >= 10,000 sqft vertical glazing then NFRC Certification is required. Follow NFRC 100-SB Procedures and submit NFRC Label Certificate Form.

#	Type	Area	U-Fac.	Act. Azm.	SHGC	Glazing Type	Location / Comments
1	Window	16	0.600	180	0.65	Dual Pane Vinyl	Kitchen
2	Window	16	0.600	180	0.65	Dual Pane Vinyl	Kitchen
3	Window	24	0.600	270	0.65	Dual Pane Vinyl	Conference
4	Window	16	0.600	180	0.65	Dual Pane Vinyl	Conference
5	Window	16	0.600	180	0.65	Dual Pane Vinyl	Conference
6	Window	42	0.550	270	0.65	Dual Pane Vinyl	Hall
7	Window	42	0.550	270	0.65	Dual Pane Vinyl	Lobby
8	Window	24	0.600	270	0.65	Dual Pane Vinyl	Office
9	Window	24	0.600	270	0.65	Dual Pane Vinyl	Office
10	Window	24	0.600	270	0.65	Dual Pane Vinyl	Office
11	Window	20	0.600	0	0.65	Dual Pane Vinyl	Office
12	Window	20	0.600	0	0.65	Dual Pane Vinyl	Office
13	Window	20	0.600	0	0.65	Dual Pane Vinyl	Office
14	Window	20	0.600	0	0.65	Dual Pane Vinyl	Office
15	Window	20	0.600	0	0.65	Dual Pane Vinyl	Office

EXTERIOR SHADING

#	Exterior Shade Type	SHGC	Window Hgt. Wd.	Overhang Len. Hgt. LExt. RExt.	Left Fin Dist. Len. Hgt.	Right Fin Dist. Len. Hgt.
1	None	0.76				
2	None	0.76				
3	None	0.76				
4	None	0.76				
5	None	0.76				
6	None	0.76				
7	None	0.76				
8	None	0.76				
9	None	0.76				
10	None	0.76				
11	None	0.76				
12	None	0.76				
13	None	0.76				
14	None	0.76				
15	None	0.76				

Run Initiation Time: 10/11/04 15:38:02 Run Code: 1097534282
EnergyPro 3.1 By EnergySoft User Number: 4751 Job Number: Page 5 of 22

ENVELOPE COMPLIANCE SUMMARY — Performance — ENV-1

PROJECT NAME: San Joaquin Valley Air Pollution Control — DATE 10/11/2004

OPAQUE SURFACES

#	Surface Type	Framing Type	Area	U-Fac.	Act. Azm.	Tilt	Solar Gains Y/N	Form 3 Reference	Location / Comments
21	Door	None	20	0.581	180	90	X	Hollow Metal Door	Conference
22	Roof	Wood	1,285	0.052	270	0	X	R-19 Suspended Ceiling	Office
23	Wall	Wood	330	0.065	90	90	X	R-19 Wall	Office
24	Roof	Wood	767	0.052	270	0	X	R-19 Suspended Ceiling	Hall
25	Wall	Wood	90	0.065	270	90	X	R-19 Wall	Hall
26	Roof	Wood	455	0.052	270	0	X	R-19 Suspended Ceiling	Storage
27	Roof	Wood	335	0.052	270	0	X	R-19 Suspended Ceiling	Restrooms
28	Roof	Wood	1,370	0.052	270	0	X	R-19 Suspended Ceiling	Office (100)
29	Wall	Wood	370	0.065	90	90	X	R-19 Wall	Office (100)
30	Roof	Wood	1,370	0.052	270	0	X	R-19 Suspended Ceiling	Office (100)
31	Roof	Wood	1,370	0.052	270	0	X	R-19 Suspended Ceiling	Office (100)
32	Roof	Wood	560	0.052	270	0	X	R-19 Suspended Ceiling	Lobby
33	Wall	Wood	366	0.065	270	90	X	R-19 Wall	Lobby
34	Roof	Wood	370	0.052	270	0	X	R-19 Suspended Ceiling	Office
35	Wall	Wood	300	0.065	270	90	X	R-19 Wall	Office
36	Wall	Wood	124	0.065	0	90	X	R-19 Wall	Office
37	Roof	Wood	1,200	0.052	270	0	X	R-19 Suspended Ceiling	Office
38	Wall	Wood	798	0.065	0	90	X	R-19 Wall	Office
39	Wall	Wood	120	0.065	90	90	X	R-19 Wall	Office
40	Roof	Wood	120	0.052	270	0	X	R-19 Suspended Ceiling	Hall

FENESTRATION SURFACES

Site Assembled Glazing [ ] Check box if Building is >= 100,000 sqft of CFA and >= 10,000 sqft vertical glazing then NFRC Certification is required. Follow NFRC 100-SB Procedures and submit NFRC Label Certificate Form.

#	Type	Area	U-Fac.	Act. Azm.	SHGC	Glazing Type	Location / Comments
16	Window	20	0.600	0	0.65	Dual Pane Vinyl	Office
17	Window	24	0.600	0	0.65	Dual Pane Vinyl	Office
18	Window	20	0.600	0	0.65	Dual Pane Vinyl	Office
19	Window	20	0.600	0	0.65	Dual Pane Vinyl	Office
20	Window	20	0.600	0	0.65	Dual Pane Vinyl	Office
21	Window	20	0.600	0	0.65	Dual Pane Vinyl	Office
22	Window	20	0.600	0	0.65	Dual Pane Vinyl	Hall
23	Window	21	0.550	0	0.65	Dual Pane Vinyl	Hall

EXTERIOR SHADING

#	Exterior Shade Type	SHGC	Window Hgt. Wd.	Overhang Len. Hgt. LExt. RExt.	Left Fin Dist. Len. Hgt.	Right Fin Dist. Len. Hgt.
16	None	0.76				
17	None	0.76				
18	None	0.76				
19	None	0.76				
20	None	0.76				
21	None	0.76				
22	None	0.76				
23	None	0.76				

Run Initiation Time: 10/11/04 15:38:02 Run Code: 1097534282
EnergyPro 3.1 By EnergySoft User Number: 4751 Job Number: Page 6 of 22

ENVELOPE COMPLIANCE SUMMARY — Performance — ENV-1

PROJECT NAME: San Joaquin Valley Air Pollution Control — DATE 10/11/2004

OPAQUE SURFACES

#	Surface Type	Framing Type	Area	U-Fac.	Act. Azm.	Tilt	Solar Gains Y/N	Form 3 Reference	Location / Comments
41	Wall	Wood	59	0.065	0	90	X	R-19 Wall	Hall

FENESTRATION SURFACES

Site Assembled Glazing [ ] Check box if Building is >= 100,000 sqft of CFA and >= 10,000 sqft vertical glazing then NFRC Certification is required. Follow NFRC 100-SB Procedures and submit NFRC Label Certificate Form.

#	Type	Area	U-Fac.	Act. Azm.	SHGC	Glazing Type	Location / Comments

EXTERIOR SHADING

#	Exterior Shade Type	SHGC	Window Hgt. Wd.	Overhang Len. Hgt. LExt. RExt.	Left Fin Dist. Len. Hgt.	Right Fin Dist. Len. Hgt.

Run Initiation Time: 10/11/04 15:38:02 Run Code: 1097534282
EnergyPro 3.1 By EnergySoft User Number: 4751 Job Number: Page 7 of 22

CERTIFICATE OF COMPLIANCE — Performance — MECH-1

PROJECT NAME: San Joaquin Valley Air Pollution Control — DATE 10/11/2004

SYSTEM FEATURES

SYSTEM NAME	RTU-1	RTU-2A/2B	RTU-3	NOTE TO FIELD
TIME CONTROL	Programmable Switch	Programmable Switch	Programmable Switch	
SETBACK CONTROL	Heating Required	Heating Required	Heating Required	
ISOLATION ZONES	n/a	n/a	n/a	
HEAT PUMP THERMOSTAT?	n/a	n/a	n/a	
ELECTRIC HEAT?	n/a	n/a	n/a	
FAN CONTROL	Constant Volume	Constant Volume	Constant Volume	
VAV MINIMUM POSITION CONTROL?	No	No	No	
SIMULTANEOUS HEAT/COOL?	No	No	No	
HEATING SUPPLY RESET	Constant Temp	Constant Temp	Constant Temp	
COOLING SUPPLY RESET	Constant Temp	Constant Temp	Constant Temp	
HEAT REJECTION CONTROL	n/a	n/a	n/a	
VENTILATION	Air Balance	Air Balance	Air Balance	
OUTDOOR DAMPER CONTROL	Auto	Auto	Auto	
ECONOMIZER TYPE	Diff. Temp (Integrated)	Diff. Temp (Integrated)	Diff. Temp (Integrated)	
DESIGN O.A. CFM (MECH-3, COLUMN I)	829 cfm	66 cfm	862 cfm	
HEATING EQUIPMENT TYPE	Gas Furnace	Gas Furnace	Gas Furnace	
HEATING EQUIPMENT EFFICIENCY	80% AFUE	80% AFUE	80% AFUE	
COOLING EQUIPMENT TYPE	Packaged DX	Packaged DX	Packaged DX	
COOLING EQUIPMENT EFFICIENCY	10.0 SEER / 8.7 EER	10.0 SEER / 8.7 EER	9.9 EER	
MAKE AND MODEL NUMBER	Bryant - 580FPV060060N	Bryant - 580FPV036060N	Bryant - 580FPV072074	
PIPE INSULATION REQUIRED?	Yes	Yes	Yes	
PIPE/DUCT INSULATION PROTECTED?	Yes	Yes	Yes	
HEATING DUCT LOCATION / R-VALUE	Ducts in Attic / 4.2	Ducts in Attic / 4.2	Ducts in Attic / 4.2	
COOLING DUCT LOCATION / R-VALUE	Ducts in Attic / 4.2	Ducts in Attic / 4.2	Ducts in Attic / 4.2	
VERIFIED SEALED DUCTS IN CEILING/ROOF SPACE	No	No	No	

CODE TABLES: Enter code from table below into columns above.

		TIME CONTROL	SETBACK CTRL.	ISOLATION ZONES	FAN CONTROL
HEAT PUMP THERMOSTAT? ELECTRIC HEAT? VAV MINIMUM POSITION CONTROL? SIMULTANEOUS HEAT / COOL?	Y: Yes N: No	S: Prog. Switch O: Occupancy Sensor M: Manual Timer	H: Heating C: Cooling B: Both	Enter Number of Isolation Zones.	I: Inlet Vanes P: Variable Pitch V: VFD O: Other C: Curve
		VENTILATION	**OUTDOOR DAMPER**	**ECONOMIZER**	**O.A. CFM**
HEAT AND COOL SUPPLY RESET? HIGH EFFICIENCY? PIPE INSULATION REQUIRED? PIPE/DUCT INSULATION PROTECTED? SEALED DUCTS IN CEILING/ROOF SPACE?	Y: Yes N: No	B: Air Balance C: Outside Air Cert. M: Out. Air Measure D: Demand Control N: Natural	A: Auto G: Gravity	A: Air W: Water N: Not Required EC: Economizer Control See Section 144(e)3	Enter Outdoor Air CFM. Note: This shall be no less than Col. H on MECH-3.

NOTES TO FIELD - For Building Department Use Only

Run Initiation Time: 10/11/04 15:38:02 Run Code: 1097534282
EnergyPro 3.1 By EnergySoft User Number: 4751 Job Number: Page 8 of 22

CERTIFICATE OF COMPLIANCE — Performance — MECH-1

PROJECT NAME: San Joaquin Valley Air Pollution Control — DATE 10/11/2004

SYSTEM FEATURES

SYSTEM NAME	RTU-4	RTU-5	RTU-6	NOTE TO FIELD
TIME CONTROL	Programmable Switch	Programmable Switch	Programmable Switch	
SETBACK CONTROL	Heating Required	Heating Required	Heating Required	
ISOLATION ZONES	n/a	n/a	n/a	
HEAT PUMP THERMOSTAT?	n/a	n/a	n/a	
ELECTRIC HEAT?	n/a	n/a	n/a	
FAN CONTROL	Constant Volume	Constant Volume	Constant Volume	
VAV MINIMUM POSITION CONTROL?	No	No	No	
SIMULTANEOUS HEAT/COOL?	No	No	No	
HEATING SUPPLY RESET	Constant Temp	Constant Temp	Constant Temp	
COOLING SUPPLY RESET	Constant Temp	Constant Temp	Constant Temp	
HEAT REJECTION CONTROL	n/a	n/a	n/a	
VENTILATION	Air Balance	Air Balance	Air Balance	
OUTDOOR DAMPER CONTROL	Auto	Auto	Auto	
ECONOMIZER TYPE	Diff. Temp (Integrated)	Diff. Temp (Integrated)	Diff. Temp (Integrated)	
DESIGN O.A. CFM (MECH-3, COLUMN I)	765 cfm	206 cfm	206 cfm	
HEATING EQUIPMENT TYPE	Gas Furnace	Gas Furnace	Gas Furnace	
HEATING EQUIPMENT EFFICIENCY	80% AFUE	80% AFUE	80% AFUE	
COOLING EQUIPMENT TYPE	Packaged DX	Packaged DX	Packaged DX	
COOLING EQUIPMENT EFFICIENCY	9.9 EER	10.0 SEER / 8.7 EER	10.0 SEER / 8.7 EER	
MAKE AND MODEL NUMBER	Bryant - 580FPV090125	Bryant - 580FPV060060N	Bryant - 580FPV060060N	
PIPE INSULATION REQUIRED?	Yes	Yes	Yes	
PIPE/DUCT INSULATION PROTECTED?	Yes	Yes	Yes	
HEATING DUCT LOCATION / R-VALUE	Ducts in Attic / 4.2	Ducts in Attic / 4.2	Ducts in Attic / 4.2	
COOLING DUCT LOCATION / R-VALUE	Ducts in Attic / 4.2	Ducts in Attic / 4.2	Ducts in Attic / 4.2	
VERIFIED SEALED DUCTS IN CEILING/ROOF SPACE	No	No	No	

CODE TABLES: Enter code from table below into columns above.

		TIME CONTROL	SETBACK CTRL.	ISOLATION ZONES	FAN CONTROL
HEAT PUMP THERMOSTAT? ELECTRIC HEAT? VAV MINIMUM POSITION CONTROL? SIMULTANEOUS HEAT / COOL?	Y: Yes N: No	S: Prog. Switch O: Occupancy Sensor M: Manual Timer	H: Heating C: Cooling B: Both	Enter Number of Isolation Zones.	I: Inlet Vanes P: Variable Pitch V: VFD O: Other C: Curve
		VENTILATION	**OUTDOOR DAMPER**	**ECONOMIZER**	**O.A. CFM**
HEAT AND COOL SUPPLY RESET? HIGH EFFICIENCY? PIPE INSULATION REQUIRED? PIPE/DUCT INSULATION PROTECTED? SEALED DUCTS IN CEILING/ROOF SPACE?	Y: Yes N: No	B: Air Balance C: Outside Air Cert. M: Out. Air Measure D: Demand Control N: Natural	A: Auto G: Gravity	A: Air W: Water N: Not Required EC: Economizer Control See Section 144(e)3	Enter Outdoor Air CFM. Note: This shall be no less than Col. H on MECH-3.

NOTES TO FIELD - For Building Department Use Only

Run Initiation Time: 10/11/04 15:38:02 Run Code: 1097534282
EnergyPro 3.1 By EnergySoft User Number: 4751 Job Number: Page 9 of 22

CERTIFICATE OF COMPLIANCE — Performance — MECH-1

PROJECT NAME: San Joaquin Valley Air Pollution Control — DATE 10/11/2004

SYSTEM FEATURES

SYSTEM NAME	RTU-7	RTU-8	RTU-9	NOTE TO FIELD
TIME CONTROL	Programmable Switch	Programmable Switch	Programmable Switch	
SETBACK CONTROL	Heating Required	Heating Required	Heating Required	
ISOLATION ZONES	n/a	n/a	n/a	
HEAT PUMP THERMOSTAT?	n/a	n/a	n/a	
ELECTRIC HEAT?	n/a	n/a	n/a	
FAN CONTROL	Constant Volume	Constant Volume	Constant Volume	
VAV MINIMUM POSITION CONTROL?	No	No	No	
SIMULTANEOUS HEAT/COOL?	No	No	No	
HEATING SUPPLY RESET	Constant Temp	Constant Temp	Constant Temp	
COOLING SUPPLY RESET	Constant Temp	Constant Temp	Constant Temp	
HEAT REJECTION CONTROL	n/a	n/a	n/a	
VENTILATION	Air Balance	Air Balance	Air Balance	
OUTDOOR DAMPER CONTROL	Auto	Auto	Auto	
ECONOMIZER TYPE	Diff. Temp (Integrated)	Diff. Temp (Integrated)	Diff. Temp (Integrated)	
DESIGN O.A. CFM (MECH-3, COLUMN I)	206 cfm	140 cfm	198 cfm	
HEATING EQUIPMENT TYPE	Gas Furnace	Gas Furnace	Gas Furnace	
HEATING EQUIPMENT EFFICIENCY	80% AFUE	80% AFUE	80% AFUE	
COOLING EQUIPMENT TYPE	Packaged DX	Packaged DX	Packaged DX	
COOLING EQUIPMENT EFFICIENCY	10.0 SEER / 8.7 EER	10.0 SEER / 8.7 EER	10.0 SEER / 8.7 EER	
MAKE AND MODEL NUMBER	Bryant - 580FPV060060N	Bryant - 580FPV036060N	Bryant - 580FPV060060N	
PIPE INSULATION REQUIRED?	Yes	Yes	Yes	
PIPE/DUCT INSULATION PROTECTED?	Yes	Yes	Yes	
HEATING DUCT LOCATION / R-VALUE	Ducts in Attic / 4.2	Ducts in Attic / 4.2	Ducts in Attic / 4.2	
COOLING DUCT LOCATION / R-VALUE	Ducts in Attic / 4.2	Ducts in Attic / 4.2	Ducts in Attic / 4.2	
VERIFIED SEALED DUCTS IN CEILING/ROOF SPACE	No	No	No	

CODE TABLES: Enter code from table below into columns above.

		TIME CONTROL	SETBACK CTRL.	ISOLATION ZONES	FAN CONTROL
HEAT PUMP THERMOSTAT? ELECTRIC HEAT? VAV MINIMUM POSITION CONTROL? SIMULTANEOUS HEAT / COOL?	Y: Yes N: No	S: Prog. Switch O: Occupancy Sensor M: Manual Timer	H: Heating C: Cooling B: Both	Enter Number of Isolation Zones.	I: Inlet Vanes P: Variable Pitch V: VFD O: Other C: Curve
		VENTILATION	**OUTDOOR DAMPER**	**ECONOMIZER**	**O.A. CFM**
HEAT AND COOL SUPPLY RESET? HIGH EFFICIENCY? PIPE INSULATION REQUIRED? PIPE/DUCT INSULATION PROTECTED? SEALED DUCTS IN CEILING/ROOF SPACE?	Y: Yes N: No	B: Air Balance C: Outside Air Cert. M: Out. Air Measure D: Demand Control N: Natural	A: Auto G: Gravity	A: Air W: Water N: Not Required EC: Economizer Control See Section 144(e)3	Enter Outdoor Air CFM. Note: This shall be no less than Col. H on MECH-3.

NOTES TO FIELD - For Building Department Use Only

Run Initiation Time: 10/11/04 15:38:02 Run Code: 1097534282
EnergyPro 3.1 By EnergySoft User Number: 4751 Job Number: Page 10 of 22

REVISIONS	DATE
1 PLAN CHECK	11/22/04
2 PLAN CHECK	12/13/04
3	

DEHART Plumbing, Heating & Air, Inc. SINCE 1946
209 KERR AVE. • MODESTO, CA 95354
PH (209) 523-4578 • FAX (209) 523-4587
LICENSE #124566

12-13-04

ALL DESIGNS AND OTHER INFORMATION ON THESE DRAWINGS ARE FOR THE USE ON THE SPECIFIED PROJECT FOR DEHART PLUMBING, HEATING & AIR AND SHALL NOT BE USED OTHERWISE WITHOUT EXPRESS WRITTEN PERMISSION OF DEHART PLUMBING, HEATING & AIR.

PAGE TITLE: TITLE 24 DOCUMENTATION

PROJECT TITLE: SAN JOAQUIN VALLEY AIR POLLUTION CONTROL DISTRICT MODESTO, CA

DATE: 9/28/04
DRAWN BY: J. HARDIN
DESIGNED BY: J. HARDIN
SCALE: NONE
SHEET NO. M-3

ENVELOPE MANDATORY MEASURES — ENV-MM

PROJECT NAME: San Joaquin Valley Air Pollution Control | DATE: 11/22/2004

		DESCRIPTION	Designer	Enforcement
[X]	118(a)	Installed Insulating Material shall have been certified by the manufacturer to comply with the California Quality Standards for Insulating material, Title 20, Chapter 4, Article 3.		
[X]	118(c)	All Insulating Materials shall be installed in compliance with the flame spread rating and smoke density requirements of Sections 2602 and 707 of Title 24, Part 2.		
[X]	117(a)	All Exterior Joints and openings in the building that are observable sources of air leakage shall be caulked, gasketed, weatherstripped or otherwise sealed.		
[X]	116(b)	Site Constructed Doors, Windows and Skylights shall be caulked between the unit and the building, and shall be weatherstripped (except for unframed glass doors and fire doors).		
[X]	116(a)1	Manufactured Doors and Windows installed shall have air infiltration rates not exceeding those shown in Table Number 1-E. of the Standards. Manufactured fenestration products must be labeled for U-value according to NFRC procedures.		
[X]	118(e)	Demising Walls in Nonresidential Buildings: The opaque portions of framed demising walls in nonresidential buildings shall have insulation with an installed R-value of no less than R-11 between framing members.		

MECHANICAL MANDATORY MEASURES — Part 1 of 2 — MECH-MM

PROJECT NAME: San Joaquin Valley Air Pollution Control | DATE: 11/22/2004

		DESCRIPTION	Designer	Enforcement
		Equipment and Systems Efficiencies		
[X]	111	Any appliance for which there is a California standard established in the Appliance Efficiency Regulations will comply with the applicable standard.		
[X]	115(a)	Fan type central furnaces shall not have a pilot light.		
[X]	123	Piping, except that conveying fluids at temperatures between 60 and 105 degrees Fahrenheit, or within HVAC equipment, shall be insulated in accordance with Standards Section 123.		
[X]	124	Air handling duct systems shall be installed and insulated in compliance with Sections 601, 603 and 604 of the Uniform Mechanical Code.		
		Controls		
	122(e)	Each space conditioning system shall be installed with one of the following:		
[X]	122(e)1A	Each space conditioning system serving building types such as offices and manufacturing facilities (and all others not explicitly exempt from the requirements of Section 112 (d)) shall be installed with an automatic time switch with an accessible manual override that allows operation of the system during off-hours for up to 4 hours. The time switch shall be capable of programming different schedules for weekdays and weekends; incorporate an automatic holiday "shut-off" feature that turns off all loads for at least 24 hours, then resumes the normally scheduled operation; and has program backup capabilities that prevent the loss of the device's program and time setting for at least 10 hours if power is interrupted; or		
[ ]	122(e)1B	An occupancy sensor to control the operating period of the system; or		
[X]	122(e)1C	A 4-hour timer that can be manually operated to control the operating period of the system.		
[X]	122(e)2	Each space conditioning system shall be installed with controls that temporarily restart and temporarily operate the system as required to maintain a setback heating and/or a setup cooling thermostat setpoint.		
[ ]	122(g)	Each space conditioning system serving multiple zones with a combined conditioned floor area more than 25,000 square feet shall be provided with isolation zones. Each zone: shall not exceed 25,000 square feet; shall be provided with isolation devices, such as valves or dampers, that allow the supply of heating or cooling to be setback or shut off independently of other isolation areas; and shall be controlled by a time control device as described above.		
[X]	122(a&b)	Each space conditioning system shall be controlled by an individual thermostat that responds to temperature within the zone. Where used to control heating, the control shall be adjustable down to 55 degrees F or lower. For cooling, the control shall be adjustable up to 85 degrees F or higher. Where used for both heating and cooling, the control shall be capable of providing a deadband of at least 5 degrees F within which the supply of heating and cooling is shut off or reduced to a minimum.		
[X]	122(c)	Thermostats shall have numeric setpoints in degrees Fahrenheit (F) and adjustable setpoint stops accessible only to authorized personnel.		
[X]	112(b)	Heat pumps shall be installed with controls to prevent electric resistance supplementary heater operation when the heating load can be met by the heat pump alone.		

MECHANICAL MANDATORY MEASURES — Part 2 of 2 — MECH-MM

PROJECT NAME: San Joaquin Valley Air Pollution Control | DATE: 11/22/2004

		Description	Designer	Enforcement
		Ventilation		
[X]	121(e)	Controls shall be provided to allow outside air dampers or devices to be operated t the ventilation rates as specified on these plans.		
[X]	122(f)	Gravity or automatic dampers interlocked and closed on fan shutdown shall be provided on the outside air intakes and discharges of all space conditioning and exhaust systems.		
[X]	122(f)	All gravity ventilating systems shall be provided with automatic or readily accessible manually operated dampers in all openings to the outside, except for combustion air openings.		
[ ]	121(f)1	Air Balancing: The system shall be balanced in accordance with the National Environmental Balancing Bureau (NEBB) Procedural Standards (1983), or Associated Air Balance Council (AABC) National Standards (1989); or		
[X]	121(f)2	Outside Air Certification: The system shall provide the minimum outside air as shown on the mechanical drawings, and shall be measured and certified by the installing licensed C-20 mechanical contractor and certified by (1) the design mechanical engineer, (2) the installing licenced C-20 mechanical contractor, or (3) the person with overall responsibility for the design of the ventilation system; or		
[ ]	121(f)3	Outside Air Measurement: The system shall be equipped with a calibrated local or remote device capable of measuring the quantity of outside air on a continuous basis and displaying that quantity on a readily accessible display divice; or		
[ ]	121(f)4	Another method approved by the Commission.		
		Service Water Heating Systems		
[ ]	113(b)2	If a circulating hot water system is installed, it shall have a control capable of automatically turning off the circulating pump(s) when hot water is not required.		
[X]	113(b)3B	Lavatories in restrooms of public facilities shall be equipped with controls to limit the outlet temperature to 110 degrees F.		
[X]	113(b)3C	Lavatories in restrooms of public facilities shall be equipped with one of the following:		
		Outlet devices that limit the flow of hot water to a maximum of 0.5 gallons per minute.		
		Foot actuated control valves, and outlet devices that limit the flow of hot water to a maximum of 0.75 gallons per minute.		
		Proximity sensor actuated control valves, and outlet devices that limit the flow of hot water to a maximum of 0.75 gallons per minute.		
		Self-closing valves, and outlet devices that limit the flow of hot water to a maximum of 2.5 gallons per minute, and 0.25 gallons/cycle (circulating system).		
		Self-closing valves, and outlet devices that limit the flow of hot water to a maximum of 2.5 gallons per minute, and 0.50 gallons/cycle (non-circulating system).		
		Self-closing valves, and outlet devices that limit the flow of hot water to a maximum of 2.5 gallons per minute, and 0.75 gallons/cycle (foot switches and proximity sensor controls).		

REVISIONS	DATE
1 PLAN CHECK	11/22/04
2 PLAN CHECK	12/13/04
3	

DEHART Plumbing, Heating & Air, Inc.
SMACNA
204 KERR AVE. * MODESTO, CA 95354
PH (209) 523-4573 * FAX (209) 523-4597
LICENSE #724566

John Hardin 12-13-04

ALL DESIGNS AND OTHER INFORMATION ON THESE DRAWINGS ARE FOR THE USE ON THE SPECIFIED PROJECT FOR DEHART PLUMBING, HEATING & AIR AND SHALL NOT BE USED OTHERWISE WITHOUT EXPRESS WRITTEN PERMISSION OF DEHART PLUMBING, HEATING & AIR.

PAGE TITLE: MANDATORY MEASURES

PROJECT TITLE: SAN JOAQUIN VALLEY AIR POLLUTION CONTROL DISTRICT, MODESTO, CA

DATE: 9/28/04
DRAWN BY: J. HARDIN
DESIGNED BY: J. HARDIN
SCALE: NONE
SHEET NO. M-4

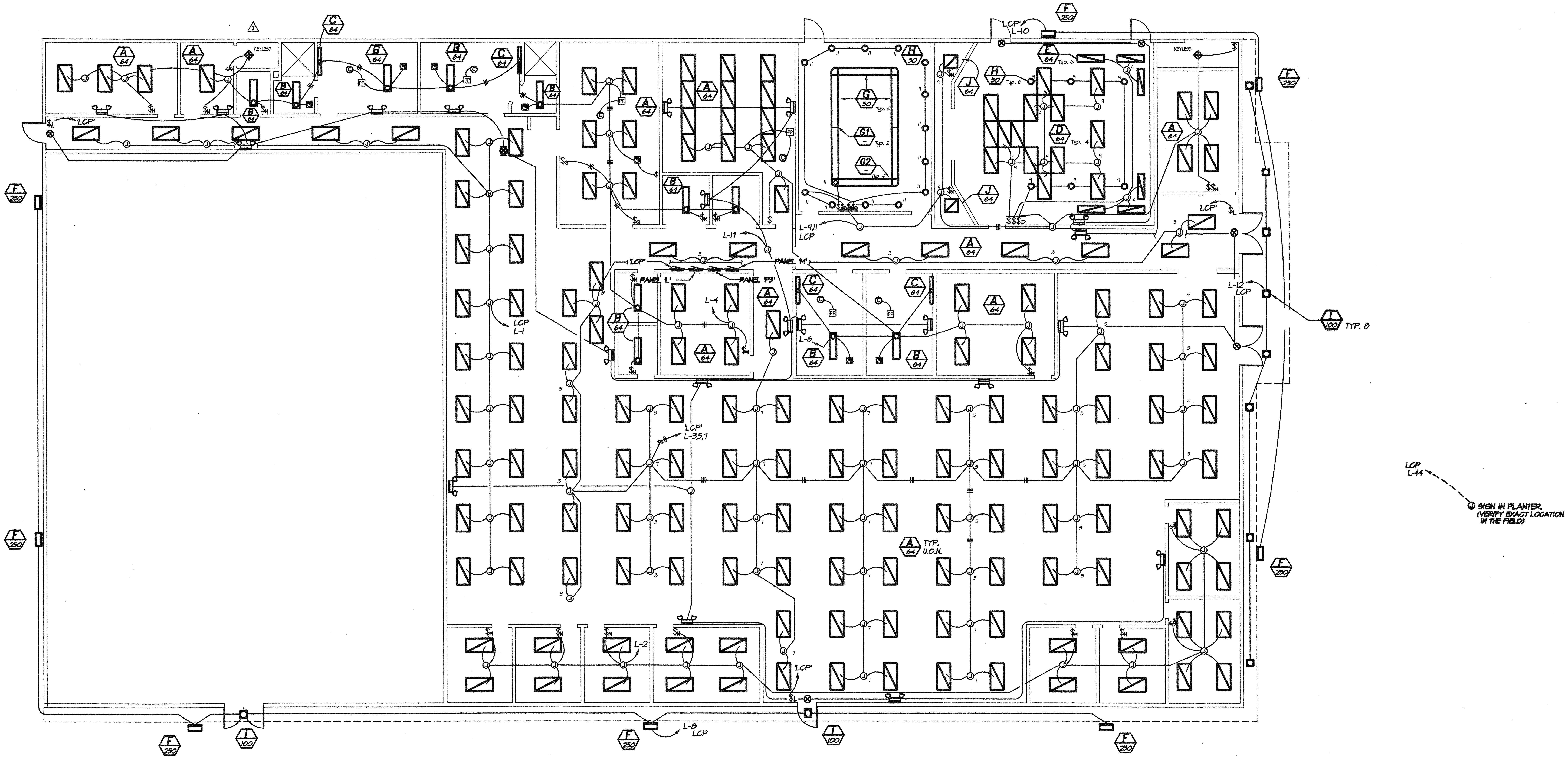

ELECTRICAL LIGHTING PLAN

SCALE: 1/8" = 1'-0"

- FIXTURE SCHEDULE -			
TYPE	LAMP	MANUFACTURER	CATALOG NUMBER
A	2-F032/741	LITHONIA	#2GT8 232 A12 UNV EB81
B	2-F032/741	LITHONIA	#LB 232 UNV EB81
C	2-F032/741	LITHONIA	#WC 232 UNV EB81
D	2-F032/741	LITHONIA	#2PM3N G B 232 24 ND UNV EB81
E	2-F032/741	LITHONIA	#PM3N G B 232 8 ND UNV EB81
F	LU 250	LITHONIA	#TWR 2 250S TB LPI
G	4-F032/741	LEDALITE	#252 6 T02 S N 0811 E W
G1	-	LEDALITE	#252 6 JNNNNW (In-line Joint)
G2	-	LEDALITE	#252 6 MLLUW ('L' intersection)
H	50W 12V MR16	HALO	#H1499T/1421C
I	LU100/D/MED	LITHONIA	#LP6H 100S 120/603A
J	2-F032/U6/741/ECO	LITHONIA	#2GT8 U316 UNV EB81
⊗	LED	LITHONIA	#LQMS W 3 G 120/277 ELN
(exit/emergency light symbol)	-	LITHONIA	#ELM2

LEGEND

- $\$_L$ BY-PASS SWITCH WATT STOPPER #AS-110
- $\$_M$ AUTOMATIC WALL SWITCH - WATT STOPPER #WS-200
- © ULTRASONIC CEILING SENSOR - WATT STOPPER #C1-200
- [PP] POWER PACK - WATT STOPPER #B120E-P
- ⌒LV⌒ LOW VOLTAGE WIRE AS REQUIRED.
- (PC) PHOTO CELL WATT STOPPER #EM-24A2

RECEIVED
DEC 13 2004
ACME CONSTRUCTION CO., INC.

DARRALE PATRIAS
ELECTRICAL CONTRACTOR INC.
2480 N. WALNUT / P.O. BOX 1832
TURLOCK, CA. 95381

Signed:

(209) 632-6196 Lic. No. 348403

This Drawing is the Property of Darrale Patrias Electrical and is loaned subject to the condition that it is not to be used or reproduced except as sanctioned in writing by Darrale Patrias Electrical.

REVISIONS	BY
1 PLAN CHECK 12/08/04	KCP

DARRALE PATRIAS
Electrical Contractor, Inc.
2480 N. WALNUT ROAD / P.O. BOX 1832 - TURLOCK, CALIFORNIA 95381
Telephone (209) 632-6196 Calif. Lic. #348403

Robert Hart, Architect

PROJECT NAME: SAN JOAQUIN VALLEY AIR POLLUTION CONTROL DISTRICT
MODESTO, CALIFORNIA

DATE: 12/10/04
JOB: 04-9826
BY: KCP
SHEET: E1

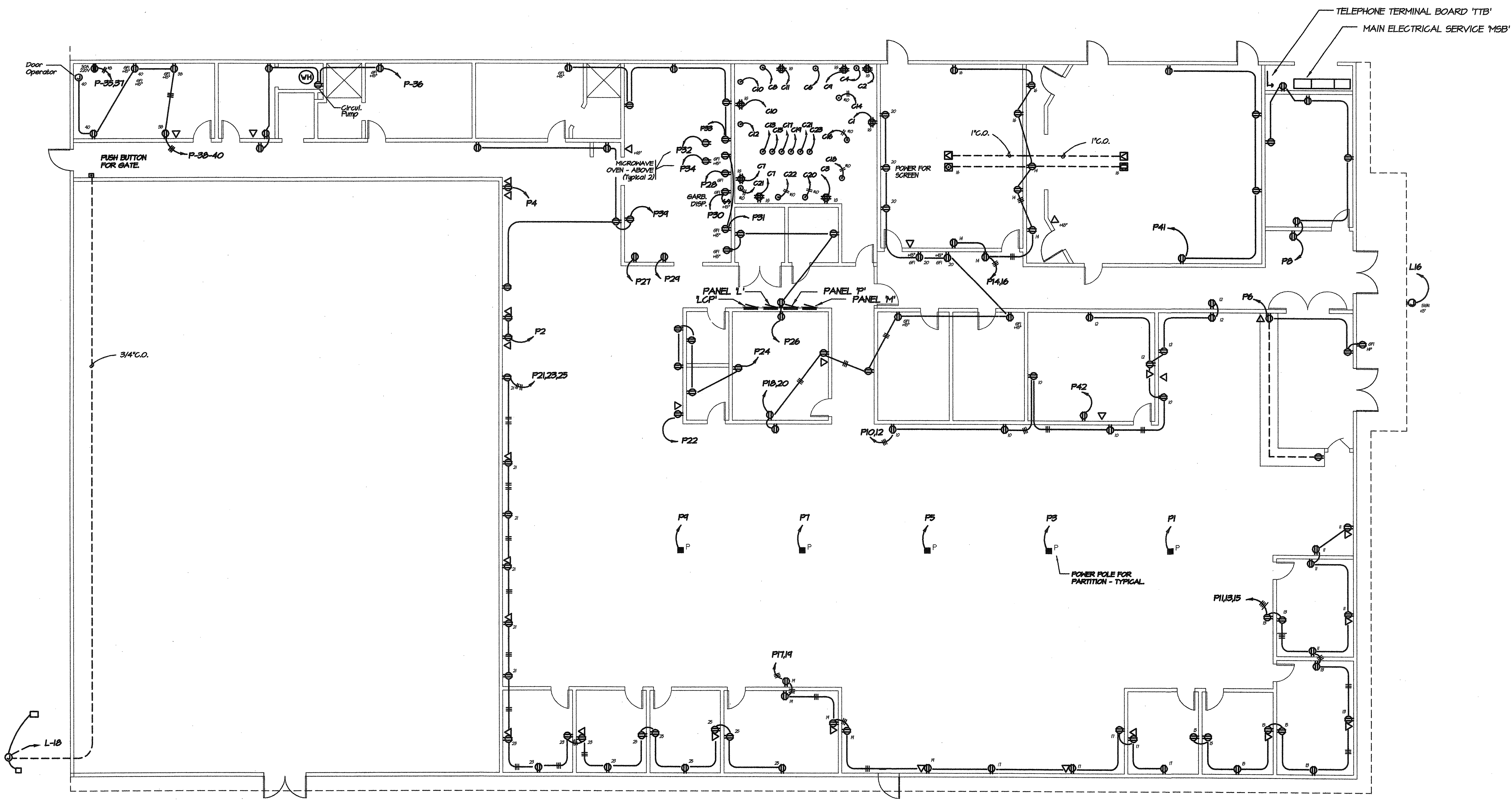

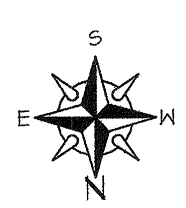

ELECTRICAL POWER PLAN

SCALE: 1/8" = 1'-0"

REVISIONS	BY
PLAN CHECK 12/08/04	KCP

DARRALE PATRIAS
Electrical Contractor, Inc.
2480 N. WALNUT ROAD / P.O. BOX 1832 - TURLOCK, CALIFORNIA 95381
Telephone (209) 632-6196 Calif. Lic. #348403

Robert Hart, Architect
Architecture and Planning
Creative Residences

PROJECT NAME:
SAN JOAQUIN VALLEY
AIR POLLUTION CONTROL DISTRICT
MODESTO, CALIFORNIA

DARRALE PATRIAS
ELECTRICAL CONTRACTOR INC.
2480 N. WALNUT / P.O. BOX 1832
TURLOCK, CA. 95381

Signed:

(209) 632-6196 Lic. No. 348403

This Drawing is the Property of Darrale Patrias Electrical and is loaned subject to the condition that it is not to be used or reproduced except as sanctioned in writing by Darrale Patrias Electrical.

DATE: 12/10/04
JOB: 04-9826
BY: KCP
SHEET: **E2**

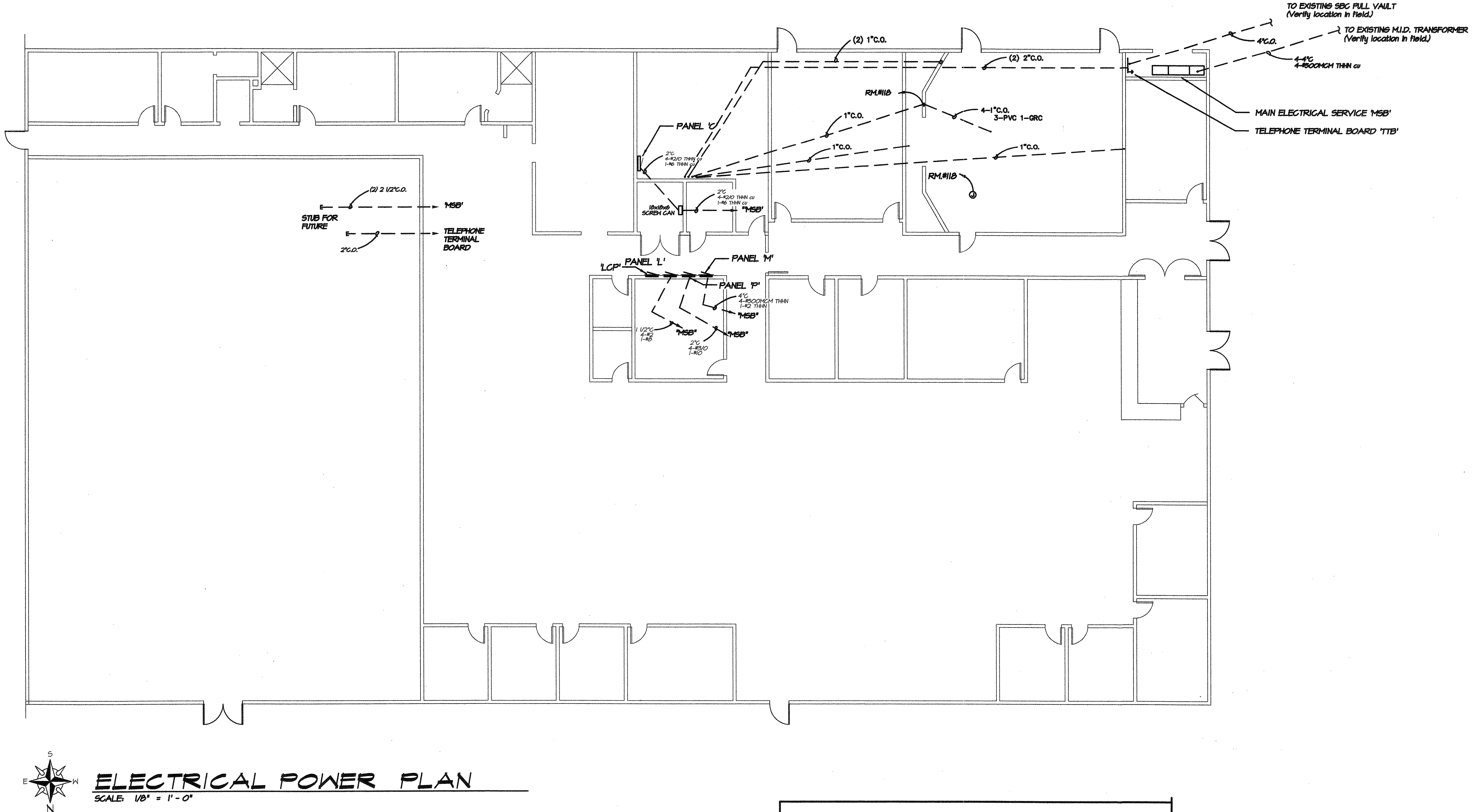

ELECTRICAL POWER PLAN

SCALE: 1/8" = 1'-0"

- STANDARD ELECTRICAL NOTES -

ALL ELECTRICAL SHALL BE INSTALLED IN COMPLIANCE WITH THE 1999 NEC AS AMMENDED BY THE STATE OF CALIFORNIA.

ALL EQUIPMENT SHALL BE LISTED BY A NATIONALLY RECOGNIZED TESTING LABORATORY AND PROPERLY LABELED (CEC Article 110-2).

PROVIDE OUTLET WITHIN 25' OF EQUIPMENT PER 210-63.

BRANCH CIRCUITS SHALL BE 1/2" CONDUIT WITH (2) #12 & (1) #12 GROUND THHN/THWN cu UNLESS OTHERWISE NOTED.

CONDUIT SHALL BE 'EMT' or 'MC' CABLE IN CEILINGS AND WALLS NOT EXPOSED TO PHYSICAL DAMAGE.

ALL RECEPTACLES ARE TO BE MOUNTED NO LESS THAN 15" ABOVE THE FLOOR.

ALL LIGHT SWITCHES ARE TO BE MOUNTED NO MORE THAN 48" ABOVE THE FLOOR.

DARRALE PATRIAS
ELECTRICAL CONTRACTOR INC.
2480 N. WALNUT / P.O. BOX 1832
TURLOCK, CA. 95381

Signed:

(209) 632-6196 Lic. No. 348403

This Drawing is the Property of Darrale Patrias Electrical and is loaned subject to the condition that it is not to be used or reproduced except as sanctioned in writing by Darrale Patrias Electrical.

REVISIONS	BY
1 PLAN CHECK 12/08/04	KCP

DARRALE PATRIAS
Electrical Contractor, Inc.
2480 N. WALNUT ROAD / P.O. BOX 1832 - TURLOCK, CALIFORNIA 95381
Telephone (209) 632-6196 Calif. Lic. #348403

Robert Hart, Architect
Architecture and Planning
Creative Residences
3605 Columbine Dr.
Modesto, CA 95356
(209) 578-3353

PROJECT NAME:
SAN JOAQUIN VALLEY
AIR POLLUTION CONTROL DISTRICT
MODESTO, CALIFORNIA

DATE: 12/10/04
JOB: 04-9826
BY: KCP
SHEET: E3

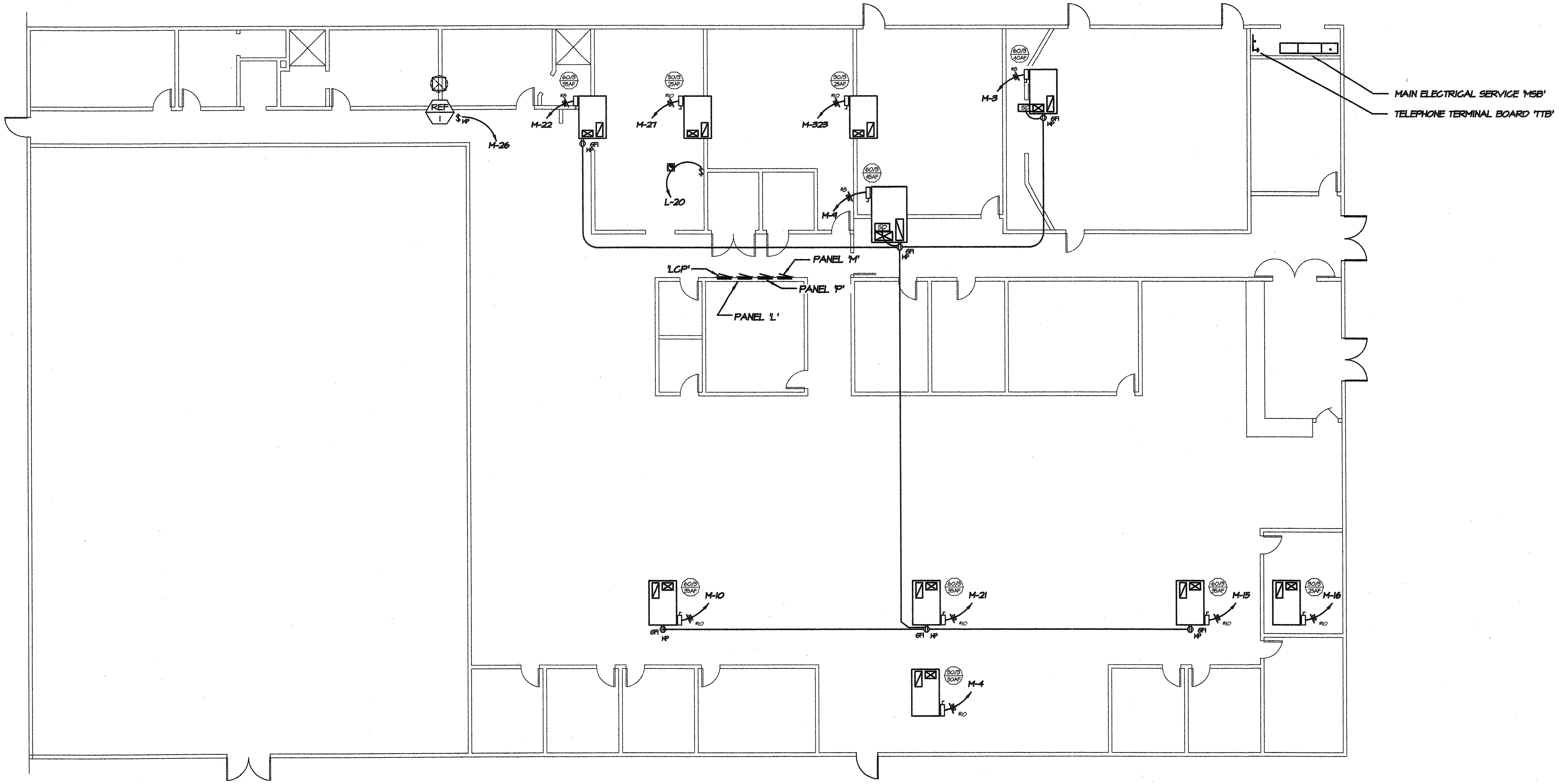

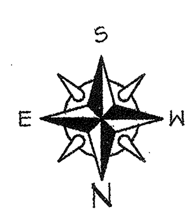

ELECTRICAL ROOF PLAN

SCALE: 1/8" = 1'-0"

REVISIONS	BY
1 PLAN CHECK 12/08/04	KCP

DARRALE PATRIAS
Electrical Contractor, Inc.
2480 N. WALNUT ROAD / P.O. BOX 1832 - TURLOCK, CALIFORNIA 95381
Telephone (209) 632-6196 Calif. Lic. #348403

Robert Hart, Architect
Architecture and Planning
Creative Residences

PROJECT NAME:
SAN JOAQUIN VALLEY AIR POLLUTION CONTROL DISTRICT
MODESTO, CALIFORNIA

DATE:	12/10/04
JOB:	04-9826
BY:	KCP
SHEET:	E4

DARRALE PATRIAS
ELECTRICAL CONTRACTOR INC.
2480 N. WALNUT / P.O. BOX 1832
TURLOCK, CA. 95381

Signed:
(209) 632-6196 Lic. No. 348403

This Drawing is the Property of Darrale Patrias Electrical and is loaned subject to the condition that it is not to be used or reproduced except as sanctioned in writing by Darrale Patrias Electrical.

PANEL SCHEDULE "P"

MOUNTING: FLUSH AMPS: 200 MAIN: Lug VOLTS: 120/208 PHASE: 3 WIRE: 4

BRKR A	BRKR P		CIRC. WATTS	MISC.	REC.	LTS.	CIRC. No.	PHASE A	PHASE B	PHASE C	CIRC. No.	LTS.	REC.	MISC.	CIRC. WATTS		BRKR A	BRKR P
20	1	PARTITION OUTLETS 100	750	1			1	1500			2			1	750	PARTITION OUTLETS 100	20	1
20	1	PARTITION OUTLETS 100	750	1			3		1500		4			1	750	PARTITION OUTLETS 100	20	1
20	1	PARTITION OUTLETS 100	750	1			5			1470	6		4		720	OUTLETS 130, EXTERIOR	20	1
20	1	PARTITION OUTLETS 100	750	1			7	1850			8		6		1080	OUTLETS 129, 115, 131	20	1
20	1	PARTITION OUTLETS 100	750	1			9		1650		10		5		900	OUTLETS 100, 109	20	1
20	1	OUTLETS 101, 130	900		5		11			1800	12		5		900	OUTLETS 100, 109, 129	20	1
20	1	OUTLETS 100, 101, 102	900		5		13	1800			14		5		900	OUTLETS 129, 116, 117	20	1
20	1	OUTLETS 102, 104, 105	900		5		15		1800		16		5		900	OUTLETS 116, 117	20	1
20	1	OUTLETS 100, 103	900		5		17			1800	18		5		900	OUTLETS 112, 128, 111	20	1
20	1	OUTLETS 100, 105	900		5		19	1800			20		5		900	OUTLETS 110, 129, 117	20	1
20	1	OUTLETS 100	900		5		21		2150		22			1	1250	COPIER 100	20	1
20	1	OUTLETS 108, 107	900		5		23			1800	24		5		900	OUTLETS 112, 114, 113, 100	20	1
20	1	OUTLETS 103, 106, 107	1080		6		25	1980			26		5		900	OUTLETS 112, 127, 119, 120, 121	20	1
20	1	VENDING MACHINE	1250	1			27		2500		28			1	1250	DISHWASHER	20	1
20	1	VENDING MACHINE	1250	1			29			2250	30			1	1000	DISPOSAL	20	1
20	1	OUTLETS COUNTER 121	500		2		31	1750			32			1	1250	MICROWAVE	20	1
20	1	OUTLETS COUNTER 121, 122	900		5		33		2150		34			1	1250	MICROWAVE	20	1
50		EQUIPMENT OUTLET SHOP 125	3640	1			35			4540	36		5		900	OUTLETS 112, 128, 111	20	1
	2		3640				37	4000			38		2		360	OUTLETS 110, 129, 117	20	1
20	1	OUTLETS 100, 121	900		5		39		1440		40		3		540	OUTLETS 112, 128, 111	20	1
20	1	OUTLETS 110	720		4		41			1250	42			1	1250	COPIER 109	20	1
							PHASE TOTALS	15380	13190	14910						118.83 AMPS.		

PANEL SCHEDULE "C"

MOUNTING: FLUSH AMPS: 200 MAIN: LUG VOLTS: 120/208V PHASE: 3 WIRE: 4

BRKR A	BRKR P		CIRC. WATTS	MISC.	REC.	LTS.	CIRC. No.	PHASE A	PHASE B	PHASE C	CIRC. No.	LTS.	REC.	MISC.	CIRC. WATTS		BRKR A	BRKR P
20	1	QUADPLEX OUTLET	500		1		1	1500			2		1		1000	COMPUTER EQUIPMENT	30	1
20	1	QUADPLEX OUTLET	500		1		3		1500		4		1		1000	COMPUTER EQUIPMENT	30	1
20	1	PBX OUTLET	500		1		5			1500	6		1		1000	COMPUTER EQUIPMENT	30	1
20	1	QUADPLEX OUTLET	500		1		7	1500			8		1		1000	COMPUTER EQUIPMENT	30	1
20	1	QUADPLEX OUTLET	500		1		9		1500		10		1		1000	COMPUTER EQUIPMENT	30	1
20	1	QUADPLEX OUTLET	500		1		11			1500	12		1		1000	COMPUTER EQUIPMENT	30	1
30	1	COMPUTER EQUIPMENT	1000		1		13	2000			14		1		1000	COMPUTER EQUIPMENT	30	1
30	1	COMPUTER EQUIPMENT	1000		1		15		2000		16		1		1000	COMPUTER EQUIPMENT	30	1
30	1	COMPUTER EQUIPMENT	1000		1		17			2000	18		1		1000	COMPUTER EQUIPMENT	30	1
30	1	COMPUTER EQUIPMENT	1000		1		19	2000			20		1		1000	COMPUTER EQUIPMENT	30	1
30	1	COMPUTER EQUIPMENT	1000		1		21		2000		22		1		1000	COMPUTER EQUIPMENT	30	1
30	1	COMPUTER EQUIPMENT	1000		1		23			2000	24		1		1000	COMPUTER EQUIPMENT	30	1
							25				26							
							27				28							
							29				30							
							31				32							
							33				34							
							35				36							
							37				38							
							39				40							
							41				42							
							PHASE TOTALS	5000	5000	5000						41.69 AMPS.		

PANEL SCHEDULE "M"

MOUNTING: FLUSH AMPS: 400 MAIN: LUG VOLTS: 120/208 PHASE: 3 WIRE: 4

BRKR A	BRKR P		CIRC. WATTS	MISC.	REC.	LTS.	CIRC. No.	PHASE A	PHASE B	PHASE C	CIRC. No.	LTS.	REC.	MISC.	CIRC. WATTS		BRKR A	BRKR P
50			3886				1	6789			2				2903		40	
		RTU-3	3886	1			3		6789		4			1	2903	RTU-9		
	3		3886				5			6789	6				2903			3
60			4810				7	8085			8				3275		40	
		RTU-4	4810	1			9		8085		10			1	3275	RTU-5		
	3		4810				11			8085	12				3275			3
40			3275				13	5398			14				2123		30	
		RTU-7	3275	1			15		5398		16			1	2123	RTU-8		
	3		3275				17			5398	18				2123			3
40			3275				19	6550			20				3275		40	
		RTU-6	3275	1			21		6550		22			1	3275	RTU-1		
	3		3275				23			6550	24				3275			3
30			2123				25	2399			26			1	276	REF-1	20	1
		R.T.U.-2A	2123	1			27		2873		28		6	2	750	OUTLETS & SMOKE DET.	20	1
	3		2123				29			4246	30				2123		30	
							31	2123			32			1	2123	R.T.U.-2A		
							33		2123		34				2123			3
							35				36							
							37				38							
							39				40							
							41				42							
							PHASE TOTALS	31344	31818	31068						261.87 AMPS.		

PANEL SCHEDULE "L"

MOUNTING: FLUSH AMPS: 100 MAIN: LUG VOLTS: 120/208 PHASE: 3 WIRE: 4

BRKR A	BRKR P		CIRC. WATTS	MISC.	REC.	LTS.	CIRC. No.	PHASE A	PHASE B	PHASE C	CIRC. No.	LTS.	REC.	MISC.	CIRC. WATTS		BRKR A	BRKR P
20	1	LIGHTING 126, 100	1600			25	1	3008			2	22			1408	LIGHTING-OFFICE	20	1
20	1	LIGHTING 100, 127, 129	1600			25	3		3450		4	25		5	1850	LIGHTING-KITCH. RR. etc..	20	1
20	1	LIGHTING 100, 30	1856			29	5			3340	6	21		2	1444	REST ROOM & COMPUTOR	20	1
20	1	LIGHTING 100	1920			30	7	3370			8	7			1450	LIGHTING - EXTERIOR	20	1
20	1	LIGHTING 117, 115	1674			29	9		2474		10	5			800	LIGHTING - EXTERIOR	20	1
20	1	LIGHTING 116	1680			28	11			2480	12	8			800	LIGHTING - EXTERIOR	20	1
20	1	SPARE					13	750			14			1	750	SIGN	20	1
20	1	SPARE					15		750		16			1	750	SIGN	20	1
* 20	1	EMERGENCY LIGHTS	900			18	17			1900	18			1	1000	ELECTRIC CARD OP. GATE	20	1
							19	300			20			1	300	EXHAUST FAN	20	1
							21				22							
							23				24							
							PHASE TOTALS	7428	6675	7680						61.0 AMPS.		

* LOCK-ON-DEVICE

MAIN ELECTRICAL SERVICE 'MSB'

1600 AMP 120/208V 3-PHASE 4-WIRE NEMA-1 30KAIC

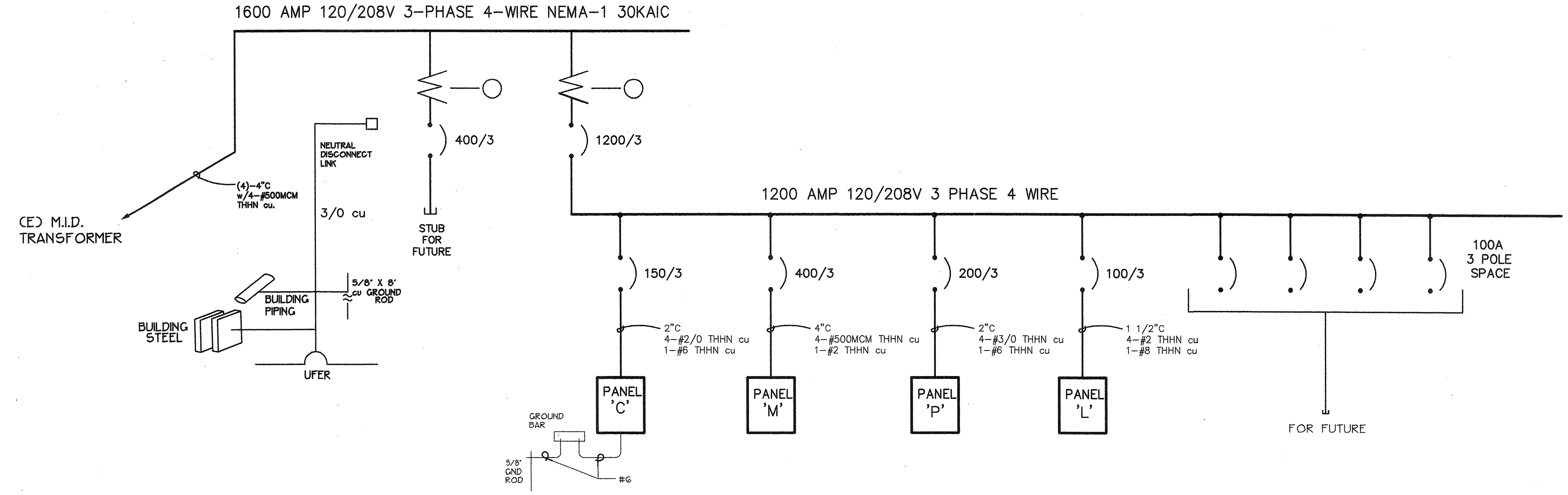

ONE LINE DIAGRAM

N.T.S.

DARRALE PATRIAS
ELECTRICAL CONTRACTOR INC.
2480 N. WALNUT / P.O. BOX 1832
TURLOCK, CA. 95381

Signed:

(209) 632-6196 Lic. No. 348403

This Drawing is the Property of Darrale Patrias Electrical and is loaned subject to the condition that it is not to be used or reproduced except as sanctioned in writing by Darrale Patrias Electrical.

REVISIONS	BY
1 PLAN CHECK 12/08/04	KCP

DARRALE PATRIAS
Electrical Contractor, Inc.
2480 N. WALNUT ROAD / P.O. BOX 1832 - TURLOCK, CALIFORNIA 95381
Telephone (209) 632-6196 Calif. Lic. #348403

rh
Robert Hart, Architect
Architecture and Planning
Creative Residences
3505 Columbine Dr.
Modesto, CA 95356
(209) 578-3353

PROJECT NAME: SAN JOAQUIN VALLEY AIR POLLUTION CONTROL DISTRICT
MODESTO, CALIFORNIA

DATE: 12/10/04
JOB: 04-9826
BY: KCP
SHEET: E5

CERTIFICATE OF COMPLIANCE - Lighting — Part 1 of 3 — LTG-1

PROJECT NAME: SAN JOAQUIN VALLEY AIR POLLUTION CONTROL DISTRICT	DATE: 10/25/04
PROJECT ADDRESS: ENTERPRISE WAY, MODESTO	Building Permit #
PRINCIPAL DESIGNER – LIGHTING: KRISTY PATRIAS — TELEPHONE (209) 632-6196	
DOCUMENTATION AUTHOR: KRISTY PATRIAS — TELEPHONE (209) 632-6196	Checked by/Date Enforcement Agency Use

GENERAL INFORMATION

DATE OF PLANS: 10/24/04	BUILDING CONDITIONED FLOOR AREA: 18,000 SF		CLIMATE ZONE
BUILDING TYPE	[X] NONRESIDENTIAL	[ ] HIGH RISE RESIDENTIAL	[ ] HOTEL/MOTEL GUEST ROOM
PHASE OF CONSTRUCTION	[X] NEW CONSTRUCTION	[ ] ADDITION [ ] ALTERATION	[ ] UNCONDITIONED
METHOD OF LIGHTING COMPLIANCE	[X] COMPLETE BUILDING	[ ] AREA CATEGORY	[ ] PERFORMANCE

STATEMENT OF COMPLIANCE

This Certificate of Compliance lists the building features and performance specifications need to comply with Title 24, Part 1 and 6 of the California Code of Regulations. This certificate applies only to building lighting requirements.

The documentation preparer hereby certifies that the documentation is accurate and complete.

DOCUMENTATION AUTHOR	SIGNATURE	DATE
KRISTY PATRIAS		10/25/04

The Principal Lighting Designer hereby certifies that the proposed building design represented in this set of construction documents is consistent with the other compliance forms and worksheets, with the specifications, and with any other calculations submitted with this permit application. The proposed building has beed designed to meet the envelope

Please check one:

[ ] I hereby affirm that I am eligible under the provisions of Division 3 of the Business and Professions Code to sign this document as the person responsible for its preparation; and that I am licensed in the State of California as a civil engineer or electrical engineer or I am a licensed architect.

[X] I affirm that I am eligible under the exemption to Division 3 of the Business and Professions Code by section 5537.2 or 6737.3 to sign this document as the person responsible for its preparation; and that I am a licensed contractor performing this work.

[ ] I affirm that I am eligible under Division 3 of the Business and Professions Code to sign this document because it pertains to a structure or type of work described as exempt pursuant to Business and Professions Code Sections 5537,5538 and 6737.1

PRINCIPAL LIGHTING DESIGNER – NAME	SIGNATURE	LIC. NO.	DATE
KRISTY PATRIAS		348403	10/25/04

LIGHTING MANDATORY MEASURES

Indicate location on plans of Note Block for Mandatory Measures E5

INSTRUCTIONS TO APPLICANT

For detailed instructions on the use of this and all Energy Efficiency Standards compliance forms, please refer to the Nonresidential Manual published by the California Energy Commission.
LTG–1: Required on plans for all submittals. Part 2 and 3 may be incorporated in schedules on plans.
LTG–2: Required for all submittals.
LTG–3: Optional. Use only if lighting control credits are taken.
LTG–4: Optional. Part 2 and 3 and LTG–5 are optional if Tailored Method if used.

EnergyPro 4.1 By EnergySoft User Number: 5445

LIGHTING COMPLIANCE SUMMARY — LTG-2

PROJECT NAME: SAN JOAQUIN VALLEY AIR POLLUTION CONTROL DISTRICT — DATE: 10/25/04

ACTUAL LIGHTING POWER

LUMINAIRE NAME	TYPE DESCRIPTION	NUMBER OF LUMINAIRES	WATTS PER LUMINAIRES (Including Ballast)	CEC DEFAULT? Y	N	TOTAL WATTS
A	2x4 2L FLUOR TROFFER	157	64	[X]	[ ]	10,048
B	1x4 2L FLUOR WRAP	11	64	[X]	[ ]	704
C	2L FLUOR OVER SINK	4	64	[ ]	[ ]	256
D	2x4 2L FLUOR TROFFER	14	64	[ ]	[ ]	896
E	1x4 2L FLUOR TROFFER	6	64	[ ]	[ ]	384
G	4L FLUOR LINEAR	6	128	[ ]	[ ]	768
H	50W RECESSED CAN	18	50	[ ]	[ ]	900
J	2x2 2L FLUOR TROFFER	2	64	[ ]	[ ]	128

BUILDING TOTAL	14,084
PORTABLE LIGHTING (From LTG–1 Part 3 of 3)	0
LESS CONTROL CREDIT WATTS (From LTG–3)	
ADJUSTED ACTUAL WATTS	14,084

ALLOWED LIGHTING POWER (Choose One Method)

COMPLETE BUILDING METHOD

BUILDING CATEGORY (From 146(b) Table 1–M)	WATTS PER SF	COMPLETE BLDG. AREA	ALLOWED WATTS
OFFICE	1.2	18,000	21,600

AREA CATEGORY METHOD

AREA CATEGORY (From 146(b) Table 1–N)	WATTS PER SF	COMPLETE BLDG. AREA	ALLOWED WATTS
TOTAL		AREA	WATTS

TAILORED METHOD

TOTAL ALLOWED WATTS (From LTG–4)

EnergyPro 4.1 By EnergySoft User Number: 5445

CERTIFICATE OF COMPLIANCE - Lighting — Part 2 of 3 — LTG-1

PROJECT NAME: SAN JOAQUIN VALLEY AIR POLLUTION CONTROL DISTRICT — DATE: 10/25/04

INSTALLED LIGHTING SCHEDULE

Name	LUMINAIRE DESCRIPTION	LAMPS Type DESCRIPTION	LAMPS No. of Lamps	LAMPS Watts Per Lamp	BALLASTS Type DESCRIPTION	BALLASTS No. of Ballast	Luminaire No. of Luminaire	Luminaire Watts/ Luminaire	TOTAL WATTS
A	2x4 2L FLUOR TROFFER	F32T8	2	32	ELECTRONIC	1	157	64	10,048
B	1x4 2L FLUOR WRAP	F32T8	2	32	ELECTRONIC	1	11	64	704
C	2L FLUOR OVER SINK	F32T8	2	32	ELECTRONIC	1	4	64	256
D	2x4 2L FLUOR TROFFER	F32T8	2	32	ELECTRONIC	1	14	64	896
E	1x4 2L FLUOR TROFFER	F32T8	2	32	ELECTRONIC	1	6	64	384
G	4L FLUOR LINEAR	F32T8	4	32	ELECTRONIC	2	6	128	768
H	50W RECESSED CAN	50W MR16	1	50	ELECTRONIC	1	18	50	900
J	2x2 2L FLUOR TROFFER	F32U6	2	32	ELECTRONIC	1	2	64	128

Lighting Schedule on Plans Shows Exterior Lighting Meets
[ ] Efficacy and Control Requirement of 130(c)
[ ] Control Requirements of 130(f)

BUILDING TOTAL	14,084
PORTABLE LIGHTING (From LTG–1 Part 3 of 3)	—
LESS CONTROL CREDIT WATTS (From LTG–3)	—
ADJUSTED ACTUAL WATTS	14,084

MANDATORY AUTOMATIC CONTROLS

CONTROL LOCATION (Room #)	CONTROL IDENTIFICATION	CONTROL TYPE (Auto Time Switch, Exterior, etc.)	SPACE CONTROLLED	NOTE TO FIELD
R.R. & STORAGE	Ⓒ	OCCUPANCY SENSOR	ALL	
OFFICES	$M	AUTOMATIC WALL SWITCH	ALL	

CONTROLS FOR CREDIT

CONTROL LOCATION (Room # or Dwg. #)	CONTROL IDENTIFICATION	CONTROL TYPE (Occupant, Daylight, Dimming, etc.)	LUMINAIRES CONTROLLED TYPE	LUMINAIRES CONTROLLED # OF LUMINAIRES	NOTE TO FIELD

NOTES TO FIELD - For Building Department Use Only

EnergyPro 4.1 By EnergySoft User Number: 5445

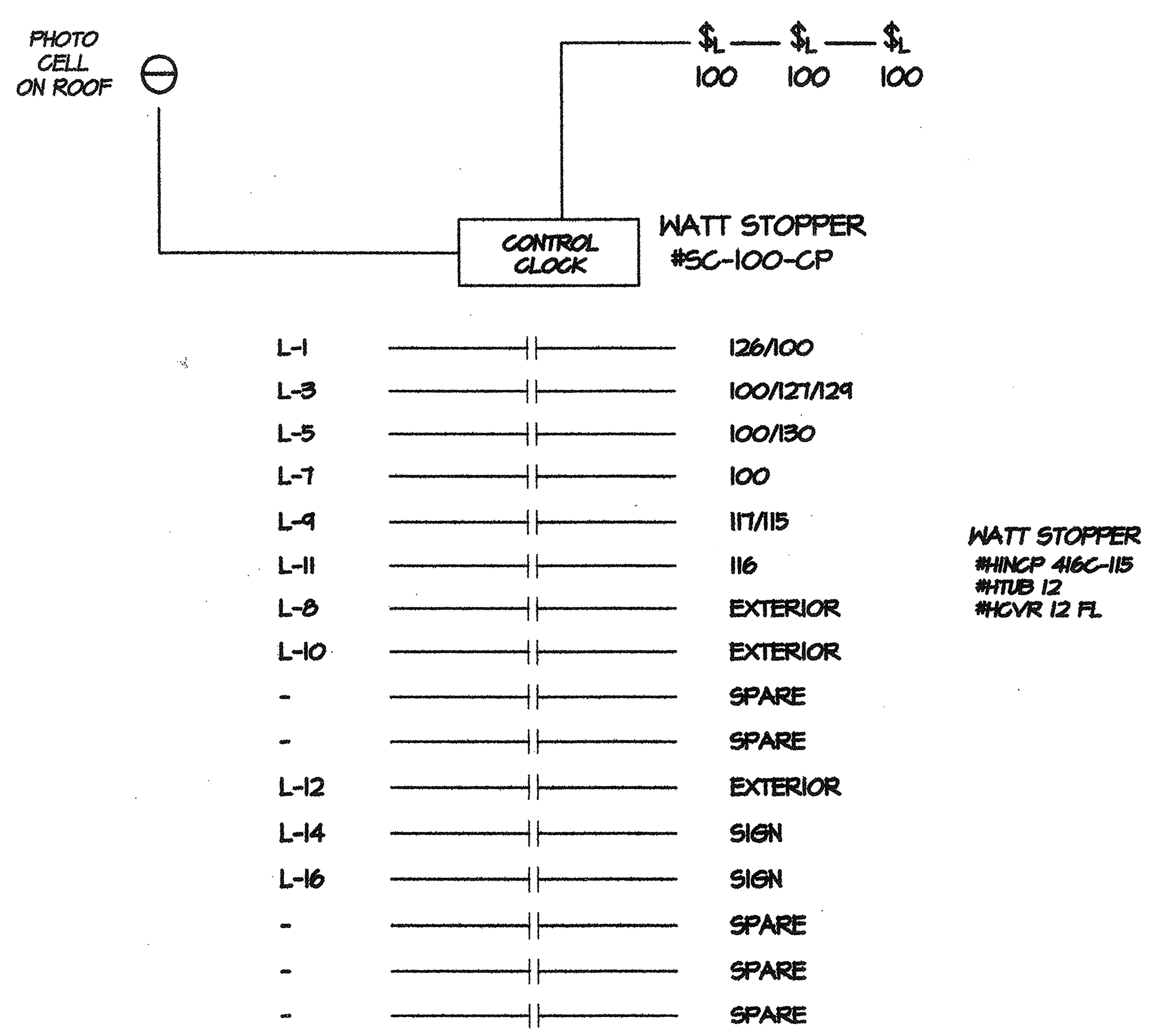

LIGHTING CONTROL PANEL "LCP"

N.T.S.

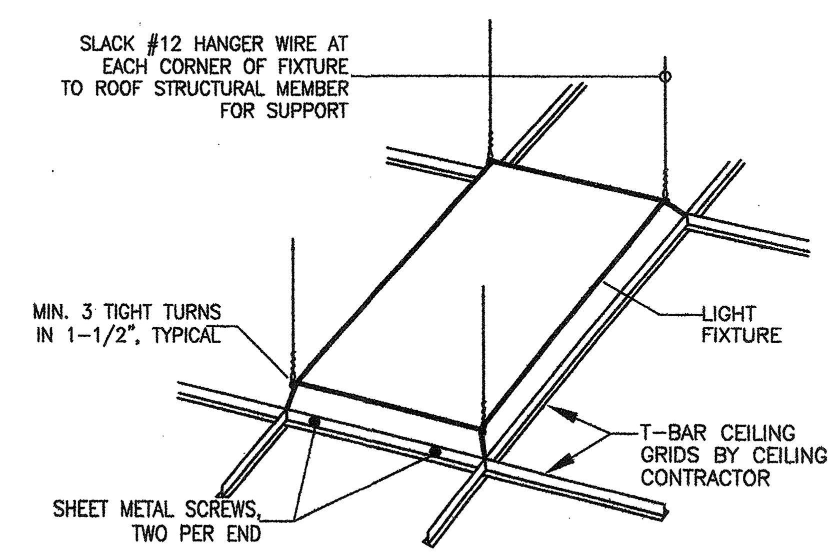

LIGHT FIXTURE SUPPORT

N.T.S.

PROVIDE TWO HANGER WIRES AT OPPOSITE CORNERS FOR HEAVY DUTY RATED CEILING SYSTEM. PROVIDE FOUR HANGER WIRES, ONE AT EACH CORNER, FOR INTERMEDIATE RATED CEILING SYSTEM OR IF THE FIXTURE WEIGHS MORE THAN 56 POUNDS.

- STANDARD ELECTRICAL SYMBOLS -

- SURFACE MOUNT FLUORESCENT – SEE FIXTURE SCHEDULE.
- LENSED RECESSED FLUORESCENT FIXTURE – SEE SCHEDULE.
- EMERGENCY EXIT SIGN – SEE SCHEDULE.
- EMERGENCY BATTERY PACK W/TWO HEADS–SEE SCHEDULE.
- RECESSED CAN LIGHT – SEE FIXTURE SCHEDULE.
- HIGH BAY/LOW BAY FIXTURE – SEE SCHEDULE.
- $ SINGLE POLE TOGGLE SWITCH, +48" UNLESS NOTED
- $3 THREE WAY TOGGLE SWITCH, +48" UNLESS NOTED.
- 15AMP 125V 3W FLUSH FLOOR MOUNTED RECEPTICLE.
- 15AMP 125V NEMA 5–15R DUPLEX RECEPTICLE, +18".
- 50AMP 208V NEMA 6–50 SPECIALTY OUTLET IN SHOP AREA.
- 15AMP 120V QUADPLEX RECEPTICLE.
- TELEPHONE OUTLET, 4 11/16" SQ. BOX W/RING & PLATE.
- JUNCTION BOX, SIZE AND TYPE AS INDICATED, OR AS REQ'D.
- POWER POLE – HOOK–UP ONLY/ SUPPLIED BY OTHERS.
- COMPUTER OUTLET – CONDUIT ONLY/CABLE BY OTHERS.
- TELEPHONE TERMINAL BACKBOARD.
- FUSED DISCONNECT SWITCH – SIZE AND TYPE AS REQ'D.
- CONTROL EQUIP. – N.I.E.S. INSTALL & CONNECT AS REQ'D.
- MOTOR – N.I.E.S. CONNECT AS REQ'D.
- EXHAUST FAN – N.I.E.S. CONNECT AS REQ'D.
- SURFACE MOUNT PANELBOARD – SEE PANEL SCHEDULE.
- FLUSH MOUNT PANELBOARD – SEE PANEL SCHEDULE.
- P1–1 ELECTRICAL HOMERUN (PANEL "P1", CIRCUIT #1.)
- C.O. EMPTY CONDUIT W/ PULL LINE.
- WP WEATHERPROOF.
- 'G' GREEN INSULATED GROUND WIRE, #12 AWG UNLESS NOTED.
- U.O.N. UNLESS OTHERWISE NOTED.
- NL NIGHT LIGHT.
- GFI GROUND FAULT CIRCUIT INTERRUPTER
- CONDUIT RUN CONCEALED IN CEILING OR WALL.
- CONDUIT RUN CONCEALED BELOW FINISHED FLOOR OR GRADE.
- HOME RUN TO RESPECTIVE PANEL OR TERMINAL CABINET.
- BRANCH CIRCUIT W/CONDUCTORS & 'G' GROUND WIRE.
- $M AUTOMATIC WALL SWITCH – WATT STOPPER #WS–200.
- Ⓒ ULTRASONIC CEILING SENSOR – WATT STOPPER #WT–2205.
- ULTRASONIC HALLWAY SENSOR – WATT STOPPER #WT–2255
- PP POWER PACK – WATT STOPPER #B277E–P 277 VAC.
- LV LOW VOLTAGE WIRE AS REQUIRED.
- $L BY–PASS SWITCH WATT STOPPER #AS–110

NONRESIDENTIAL ENERGY STANDARDS COMPLIANCE

(Title 24, Part 6, Ch. 1)
LIGHTING MANDITORY MEASURES:

✓ **Building Lighting Shut-off:** The building lighting shut-off system consists of an automatic time switch, with a zone for each floor.

✓ **Override For Building Lighting Shut-off:** The automatic building shut-off system is provided with a manual, accessible override switch in sight of the lights. The area of override is not to exceed 5,000 s.f..

✓ **Automatic Control Devices Certified:** All automatic control devices specified are certified, all alternate equipment shall be certified and installed as directed by the manufacturer.

✓ **Fluorescent Ballast And Luminaries Certified:** All fluorescent fixtures specified for the project are certified and listed in the Directory. All installed fixtures shall be certified.

N/A **Tandem Wiring For Two-Lamp Ballasts:** All one and three lamp fluorescent fixtures are tandem wired with two (2) lamp ballast where required by Standards 132; or, All three lamp fluorescent fixtures are specified with electronic high-frequency ballasts and are exempt from two-lamp tandem wiring requirements.

✓ **Individual Room/Area Controls:** Each room and area in this building is equipped with a separate switch or occupancy sensor device for each area with floor-to -ceiling walls.

✓ **Uniform Reduction For Individual Rooms:** All rooms and areas grater than 100 square feet and more than 1.2 watts per s.f. of lighting load shall be controlled with bi-level switching for uniform reduction of lighting within the room.

N/A **Daylit Area Control:** All rooms with windows and skylights that are greater than 250 s.f., and that allow for the effective use of daylight in the area shall have 50% of the lamps in each daylit area controlled by a separate switch.

✓ **Control of Exterior Lights:** Exterior mounted fixtures served from the electrical panel inside the building are controlled with a directional photo cell control on the roof and a corresponding relay in the electrical panel.

REVISIONS	BY
1 PLAN CHECK 12/08/04	KCP

DARRALE PATRIAS Electrical Contractor, Inc.
2480 N. WALNUT ROAD / P.O. BOX 1832 - TURLOCK, CALIFORNIA 95381
Telephone (209) 632-6196 Calif. Lic. #348403

Robert Hart, Architect
Architecture and Planning
Creative Residences
3505 Columbine Dr.
Modesto, CA 95356
(209) 576-3353

PROJECT NAME: SAN JOAQUIN VALLEY AIR POLLUTION CONTROL DISTRICT
MODESTO, CALIFORNIA

DARRALE PATRIAS
ELECTRICAL CONTRACTOR INC.
2480 N. WALNUT / P.O. BOX 1832
TURLOCK, CA. 95381

Signed:

(209) 632-6196 Lic. No. 348403

This Drawing is the Property of Darrale Patrias Electrical and is loaned subject to the condition that it is not to be used or reproduced except as sanctioned in writing by Darrale Patrias Electrical.

DATE:	12/10/04
JOB:	04-9826
BY:	KCP
SHEET:	E6

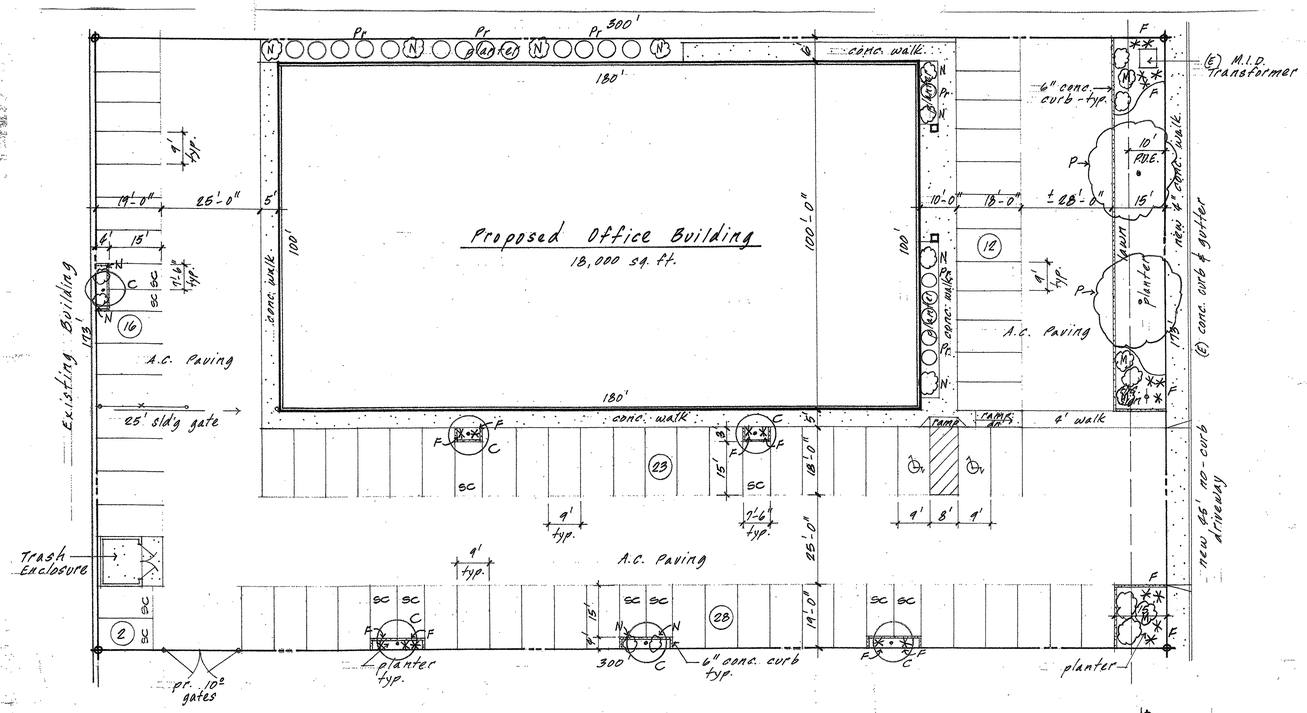

Landscaping Plan 1" = 20'

Plant Legend

Symbol	Size	Plant Variety
P	15-gal.	Pistacia Chinensis - Chinese Pistache
C	15-gal.	Lagerstroemia indica - Crape Myrtle Tree
M	5-gal.	Pittosporum tobira Wheeleri - Dwarf Mock Orange
N	5-gal	Nandina domestica Compacta - Compact Heavenly Bamboo
Pr	5-gal.	Ligustrum texanum Swanee River - Swanee River Privet
F	1-gal.	Morea irridoides Bi-color - Fortnight Lily

Notes:

1. Planting holes will be equal in depth to the root ball of the plant and 1 ½ times the diameter.
2. All plant material will have agriform fertilizer planting tablets at the following rates:
   A. 1 per one gallon shrub
   B. 2 per five gallon shrub
   C. 3 per fifteen gallon tree
3. All trees will be staked with two 8" lodgepole stakes per tree.
4. All planter areas will have Ronstar pre-emergent weed control applied at the manufacturers recommended rates and 2" of premium walk-on-bark for top dressing.

Irrigation Legend:

Symbol	Item
⊠	Superior Sterling six station controller
⋈	Febco 825Y 1- ¼ inch
⊖	Rainbird PE 1" electric valves – one per 10" round valve box
V	Rainbird 1806 pop-up sprinkler heads.
◐	Rainbird 1804 pop-up sprinkler heads.

Notes:

1. All mainline will be 1- ¼ inch schedule 40 with 18" minimum cover under all asphalt.
2. Febco 825Y backflow device shall be installed in the planter areas not in the lawn.
3. All lateral irrigation lines will be a minimum of class 200.
4. All heads will be mounted on double swing joint assemblies.
5. Clock will be mounted at location to be specified by the owner.
6. All irrigation control wires will be 14 gauge direct burial with two extra wires from the clock to the valve locations.
7. All valves will be located in planter areas with one valve per 10" round valve box.
8. Any piping or wiring under paving or concrete will be sleeved with 3" rigid 2500 lb. crush drain line.

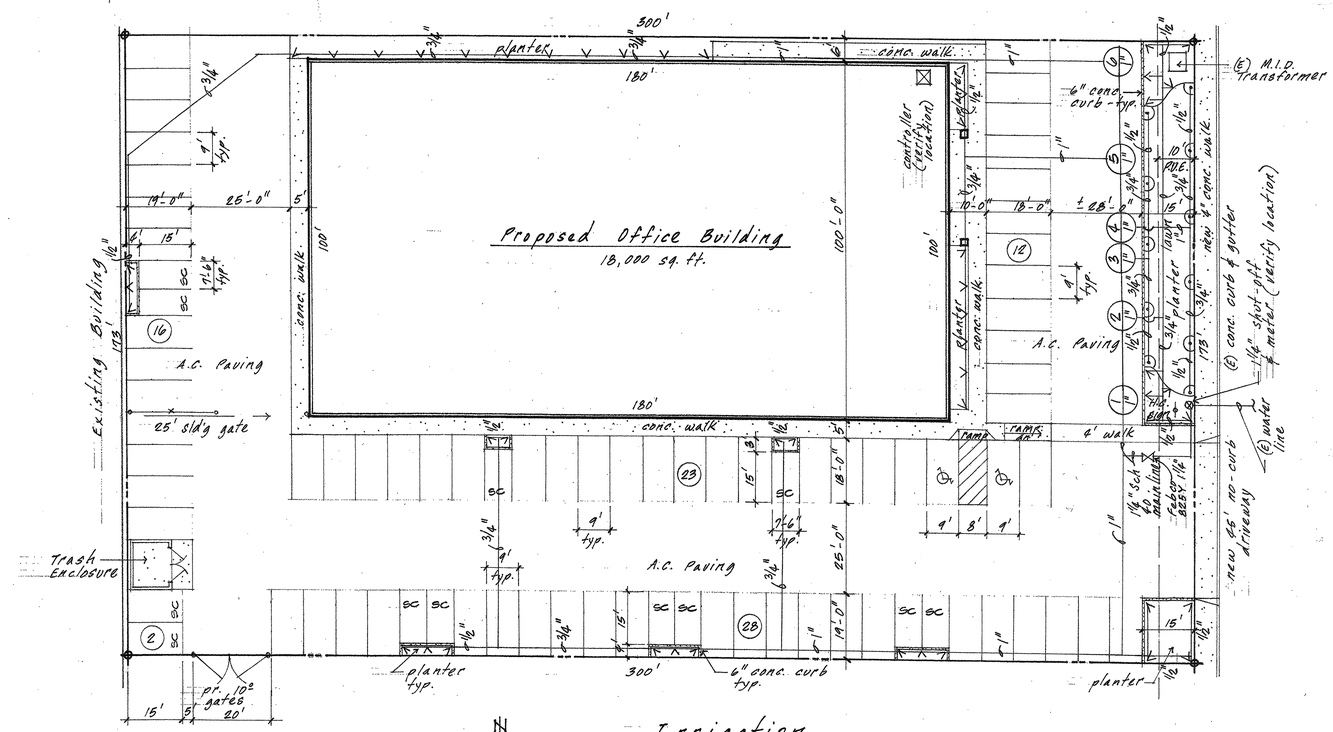

Irrigation Site Plan 1" = 20'

SJVAPCD OFFICE BUILDING
MODESTO, CA

Robert Hart, Architect
Architecture and Planning
Creative Residences
3505 Columbine Dr.
Modesto, CA 95355
(209) 578-3353

10-27-04

Sheet No. L-1 Of Sheets